SIEMENS

Technical Instructions
Document No. 155-512P25
VG…
August 11, 2005

VG Series

VGG… and VGD… Gas Valves for use with SKP… Electro-hydraulic Actuators

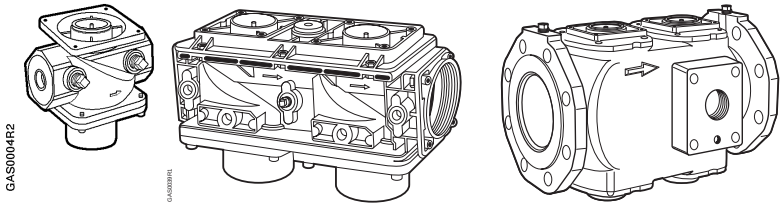

VGG… **VGD20…** **VGD40…**

ISO 9001 and 14000 REGISTERED FIRM

GAS0001R2

LISTED

FM APPROVED

Only when assembled to SKP… Series actuators

Description

The normally closed VG… Series of modular single and double-body gas valves combined with SKP… Series electro-hydraulic actuators provide safety shut-off, gas pressure regulation and air/gas ratio control for commercial and industrial gas burners.

Table 1. Legend.

Model Numbers	Body Style	Connection
VGG…	Single	NPT Threaded
VGD…	Double	NPT Threaded or ANSI Flanged

Features

All Models

- UL listed, FM approved, CSA certified, IRI approvable, ISO 9001 and 14000 certified. European, Australian and Japanese approved versions available.
- Stainless steel mesh inlet filter protects the valve seat(s) as well as downstream components.
- 1/4-inch NPT pressure taps on the inlet and outlet. (See Table 2 for details).
- Dual stem guides ensure precise disc alignment and tight shut-off.

VGG… Models

- Contoured valve disc provides smooth release of gas and stable regulating control.
- 3/4-inch NPT port for pilot or vent line connection on 2-1/2 and 3-inch VGG…valves.

VGD20… Models

- Compact VGD20… double-valve bodies consist of two safety shut-off valves in series. The first (inlet) valve has a flat valve disc applicable for safety shut-off function only. The second (outlet) valve has a contoured valve disc for use with pressure regulating actuators (SKP2…, SKP5…, SKP7…).
- A one-inch NPT vent connection between the valves.
- Each VGD20… double-valve requires two threaded mounting flanges (AGAxxU). Each flange includes the necessary installation hardware (bolts, nuts and O-ring). Each mounting flange has a 1/4-inch NPT pressure tap. The flanges can be pre-mounted onto the pipe, and then bolted onto the VGD20… gas valve body. This feature eliminates the use of pipe unions and permits the gas valve assembly to be easily removed from a gas train.
- The overall dimensions of both the 1-1/2-inch and 2-inch AGAxxU flanges are identical. This permits a 1-1/2-inch flange to be mounted on a 2-inch valve body or vice versa.

NOTE: VGD20… valves and AGAxxU threaded flanges must be ordered as separate items (See Table 2).

VGD40… Models

- Compact VGD40… double-valve bodies consist of two safety shut-off valves in series.
- Each individual safety shut-off valve has double seats to achieve high flow.
- Patented seat construction with individual closing spring for each seat to assure reliable shut-off and high close-off pressure rating.
- Full port vent line connection plates are available.

NOTE: VGD40… valves and AGA… vent connection plates must be ordered as separate items (See Table 2).

Application

All VG… valves can be combined with any SKP… Series actuator. The actuator can be mounted while the valve is installed and under pressure.

SKP… regulating actuators are applicable for both low and high supply gas pressure applications, eliminating excessive regulator inventories. Maximum pressure ratings vary with valve size (See Table 2).

All VG… valves perform these functions in combination with each of the following actuators:

SKP15…	Safety shut-off
SKP25…	Safety shut-off and constant pressure regulation or zero governor.
SKP55…	Safety shut-off, pressure regulation and differential pressure air/gas ratio control.
SKP75…	Safety shut-off, pressure regulation and adjustable air/gas ratio control.

Since more than one function can be performed by a single valve, fewer components and fittings are required to assemble a gas train - significantly reducing both the size and weight of the gas train. In addition, smaller diameter gas valves can be used. For details on valve sizing see the Gas Flow Charts (Figures 4 and 5).

CAUTION:

Do not oversize valves equipped with a regulating SKP… actuator. Oversizing may limit turndown and could cause oscillations.

Ordering Information

Gas valves and actuators are ordered separately. For additional SKP… actuator information, see the following Technical Instructions:

SKP15…	155-751P25
SKP25…	155-752P25
SKP55…	155-753P25
SKP75…	155-754P25

Accessories

Manual adjusting throttle attachment AGA61 permits VG… series valves to be used as adjustable limiting orifice valves. Once adjusted, the AGA61 has a provision to be sealed from tampering (See Table 3).

Adapter plate AGA60 permits VG… series valves to be used for modulating flow control when fitted with an SQX… series modulating actuator (See Table 3).

NOTE: The VG… /SQX… valve/actuator combination is designed strictly for modulating flow control and does not provide safety shut-off function.

Table 2. Product Numbers.

Product Number	Size	Maximum Operating Pressure psi	Close-off Pressure psi	Capacity CFH Natural Gas at ΔP=1" W.C.	Number of Test Points, 1/4" NPT		3/4" NPT Port	Valve Body Material
					Inlet	Outlet		
VGG10.154U	1/2" NPT	20	75	327/242◆	2	2	—	Aluminum
VGG10.204U	3/4" NPT	20	75	614/442◆	2	2	—	Aluminum
VGG10.254U	1" NPT	20	75	914/686◆	2	2	—	Aluminum
VGG10.404U	1-1/2" NPT	20	75	2,047/1,643◆	2	2	—	Aluminum
VGG10.504U	2" NPT	15	75	3,511	2	2	—	Aluminum
VGG10.654U	2-1/2" NPT	10	25	5,085	1	1	2-inlet	Cast Iron
VGG10.804U	3" NPT	10	25	6,158	1	1	2-inlet	Cast Iron
*VGD20.403U	1-1/2"	20	30	1,890	Two 1/4-inch and one 1-inch port between valves		—	Aluminum
*VGD20.503U	2"	15	30	2,300			—	Aluminum
*AGA41U	Single 1-1/2" connecting flange with 1/4-inch port for VGD 20.403U						Two (2) needed per valve. Order separately	
*AGA51U	Single 2" connecting flange with 1/4-inch port for VGD 20.503U							
VGD40.065U	2-1/2" NPT	10	75	3,880	1	1	Two 1/4-inch NPT ports between the valves	Aluminum
VGD40.080U	3" NPT	10	75	5,370	1	1		Aluminum
VGD40.100U	4" Flanged	10	30	9,680	1	1		Aluminum
VGD40.150U	6" Flanged	10	30	17,490	1	1		Aluminum

* VGD20… double valves require 2 AGAxxU threaded flanges for installation.

◆ VGG… valves, 1/2- through 1-1/2 inch have reduced flow when used with AGA66 (NEMA 4 kit). Capacities shown are without/with NEMA 4 kit (See Figure 4a).

Table 3. Accessories.

Part Number	Description	Notes
AGA40.6580U	Vent connection plate with 1-1/4" NPT vent connection and 1/4" NPT test port	Order separately. For use with VGD40… only.
AGA40.0100U	Vent connection plate with 2" NPT vent connection and 1/4" NPT test port	
AGA40.0150U	Vent connection plate with 2-1/2" NPT vent connection and 1/4" NPT test port	
AGA60	Adapter for use with SQX… actuators	
AGA61	Manual operation kit, allows VG… valves to be used as adjustable limiting orifice valve.	
AGA66	Sealing gasket to provide NEMA 3, NEMA 3R, and NEMA 4 protection.	

Specifications

Approvals	Agency approvals/standards	UL/429, FM/7400, CSA/AINSI Z21.21/CGA 6.5 Commercial/Industrial IRI approvable Agency marks apply only for VGxxx.xxxU series gas valve bodies assembled with SKPxx.xxxU actuators.
Operating Environment	Maximum operating pressure	See Table 2
	Maximum back pressure (differential)	2.5 psi (150 mbar)
	Close-off pressure	See Table 2
	Permissible gases	Natural gas, propane, butane, air, and other non-corrosive gases.
	Permissible gas temperature	5°F to 140°F (-15°C to 60°C)
	Permissible operating temperature	5°F to 140°F (-15°C to 60°C)
	Mounting	Any position except upside down
Physical Characteristics	Body materials	See Table 2
	Weight	See Tables 4 through 7
Connections	Pipe connections	NPT or ANSI Class 150 flange (See Table 2)
	Pressure and vent taps	See Table 2

Operation

All VG… gas valves are normally closed, two-way valves. The valves have a standard, integral, stainless steel mesh filter (0.8 mm) in the inlet to protect the downstream components against contamination.

VGG… series gas valves have a contoured valve disc for stable regulating control and smooth release of gas (see Figure 1).

VGD20… double valves consist of two valves in series. The first (inlet) valve has a flat valve disc suitable for the safety shut-off function only. The second (outlet) valve has a contoured valve disc for stable regulating control and smooth release of gas (see Figure 2).

VGD40… double valves consist of two valves in series. Each valve has a double seat to achieve high flow (see Figure 3).

All valves have 1/4-inch NPT ports for pressure test connection. The 2-1/2-inch and 3-inch VGG… valves have an additional 3/4-inch NPT port for a pilot connection. The VGD20… valves have a 1-inch NPT port for a vent line connection. The VGD40… valves can be equipped with a full size vent connection plate.

See Table 1 for details on ports and vent connection plates.

Operation, Continued

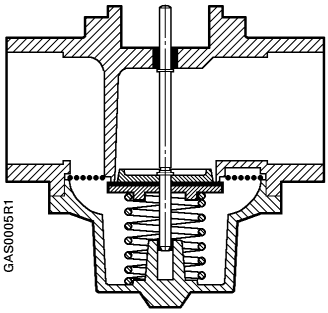

Figure 1. VGG… Models.

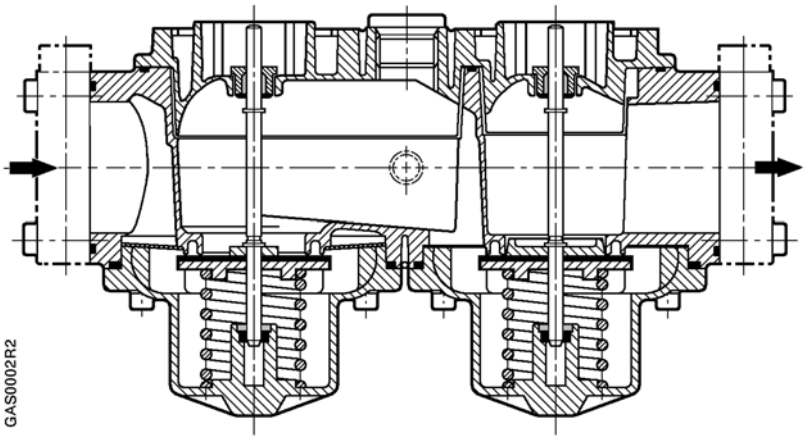

Figure 2. VGD20… Models.

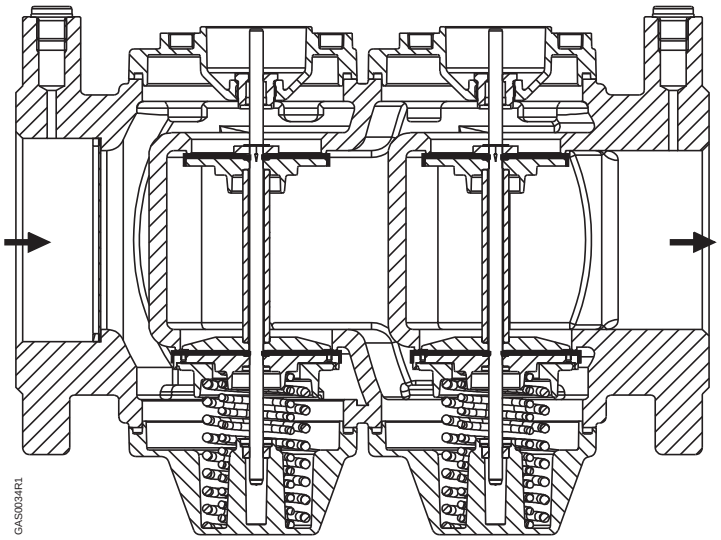

Figure 3. VGD40… Models.

Gas Flow Charts

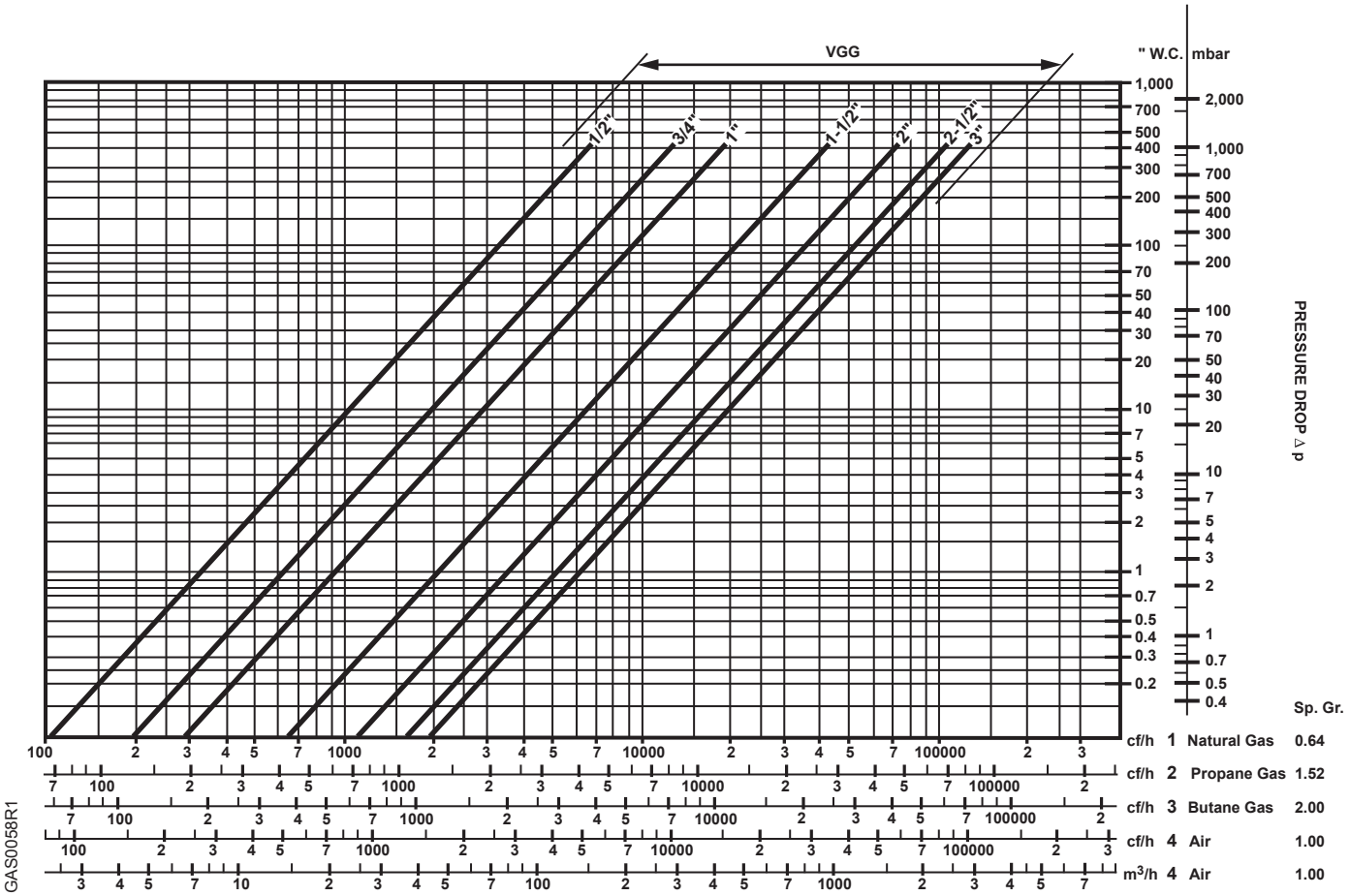

Figure 4. Sizing Single Valves Without NEMA 4 Kit.

NOTE: Pressure drop is for one valve when using an SKPx5…actuator without a NEMA 4 kit (AGA66).

CAUTION:

Do not oversize valves equipped with regulating actuators SKP2…, SKP5… or SKP7… Oversizing may limit turndown and could cause oscillations.

Gas Flow Charts, Continued

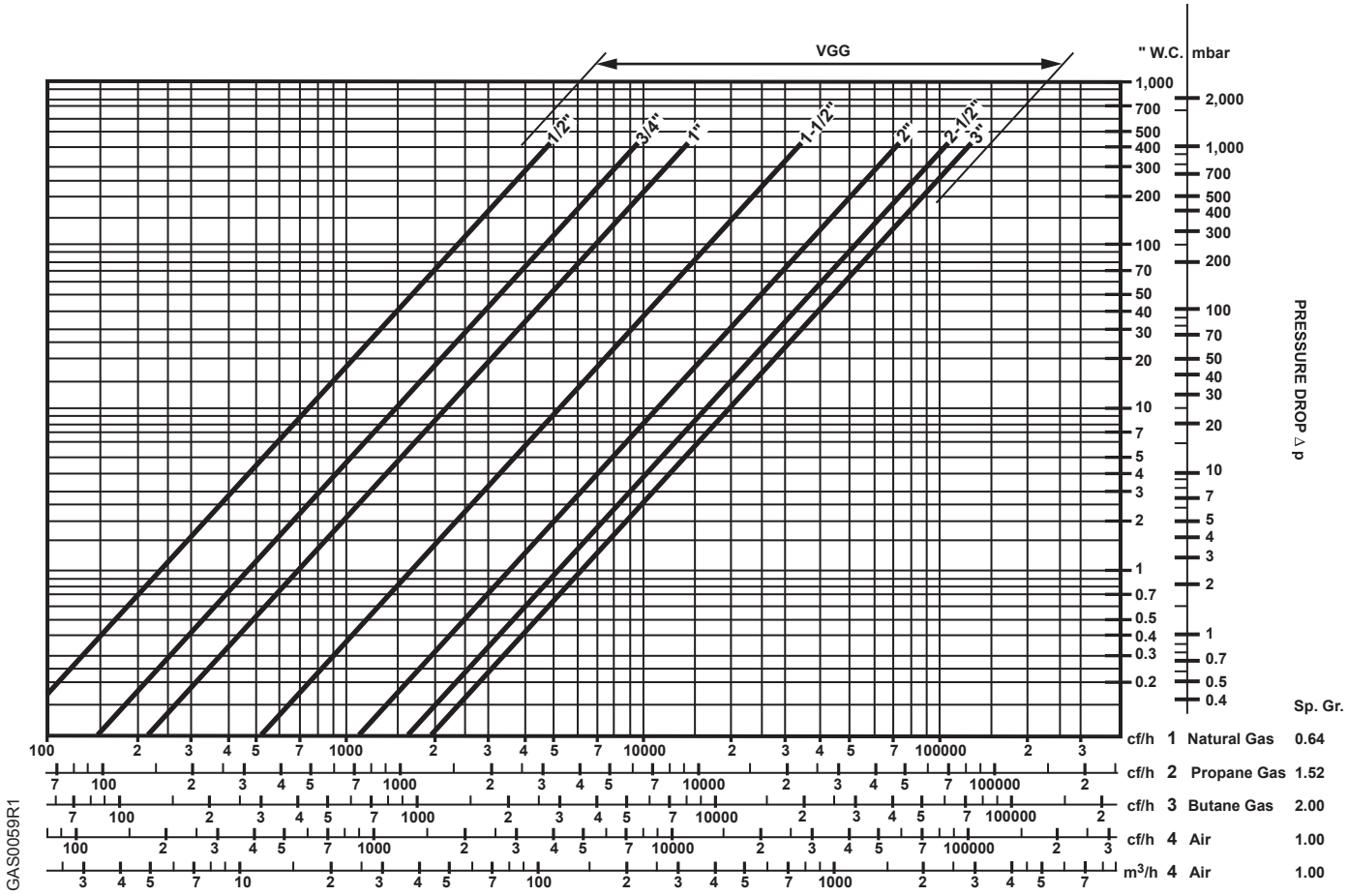

Figure 4a. Sizing Single Valves With a NEMA 4 Kit.

NOTE: Pressure drop is for one valve when using an SKPx5…actuator and a NEMA 4 kit (AGA66).

CAUTION:

Do not oversize valves equipped with regulating actuators SKP2…, SKP5… or SKP7… Oversizing may limit turndown and could cause oscillations.

Gas Flow Charts, Continued

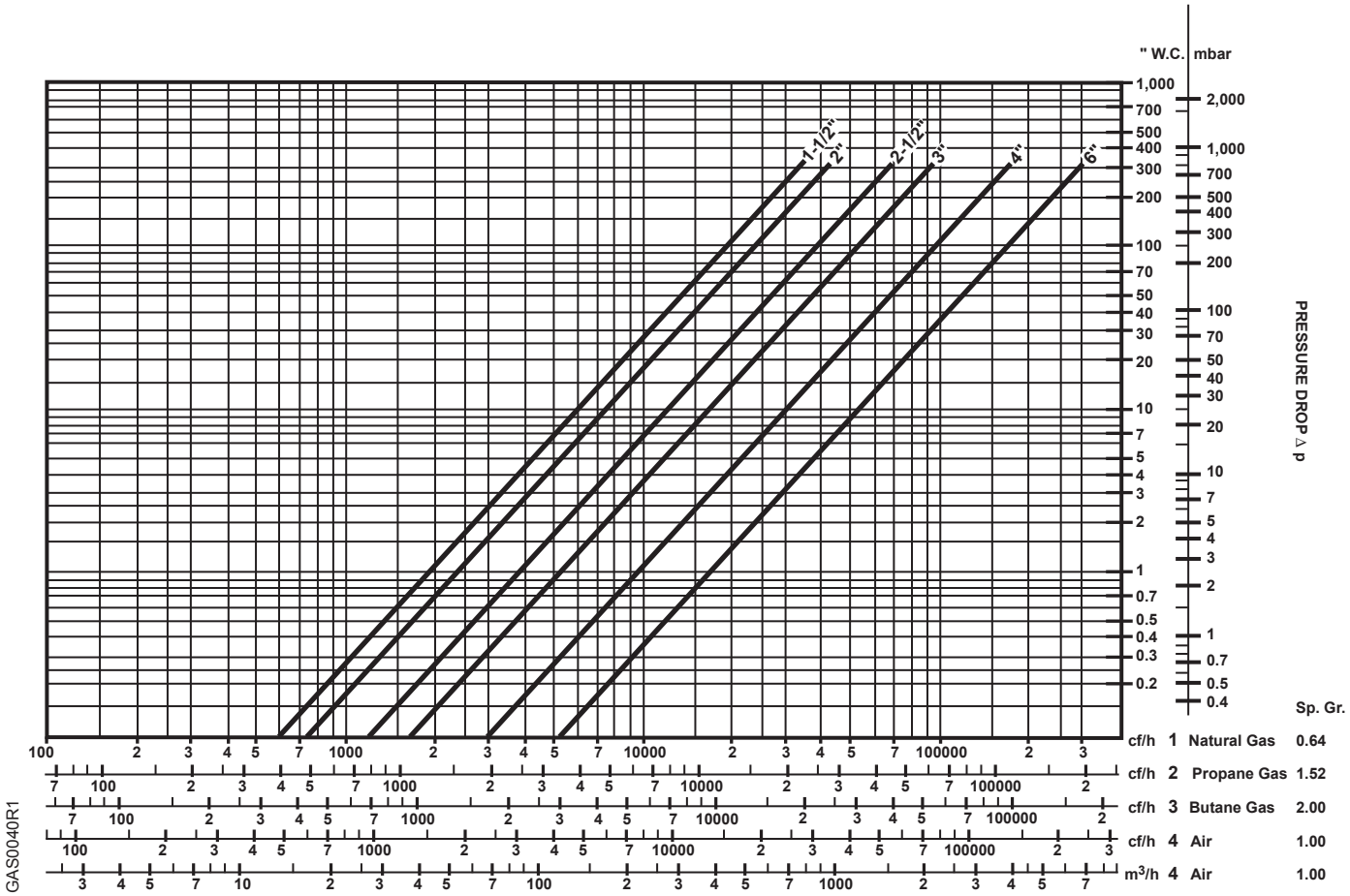

Figure 5. Sizing Double Valves.

NOTE: Pressure drop is total drop across both valves when using an SKPx5… actuator, with or without an AGA66.

CAUTION:

Do not oversize valves equipped with regulating actuators SKP2…, SKP5… or SKP7… Oversizing may limit turndown and could cause oscillations.

Dimensions

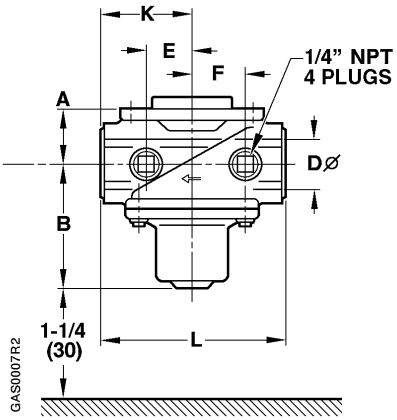

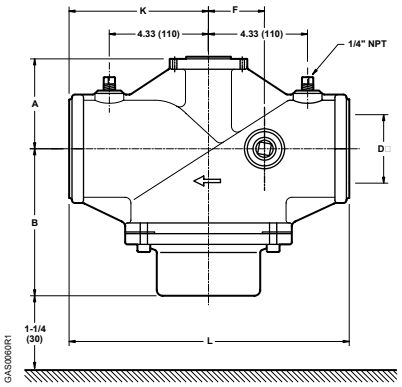

Table 4. VGG… Models.

Valve Model	Nominal Size D Inches	A Inches (mm)	B Inches (mm)	E Inches (mm)	F Inches (mm)	K Inches (mm)	L Inches (mm)	Weight Pounds (kg)
VGG…	1/2	1-1/4 (32)	3-1/8 (79)	1-1/8 (28)	1-7/32 (31)	2-3/16 (55)	4-3/8 (110)	1.65 (0.75)
	3/4	1-1/4 (32)	3-1/8 (79)	1-1/8 (28)	1-7/32 (31)	2-3/16 (55)	4-3/8 (110)	1.65 (0.75)
	1	1-1/4 (32)	3-18 (79)	1-1/8 (28)	1-7/32 (31)	2-3/16 (55)	4-3/8 (110)	1.5 (0.7)
	1-1/2	1-5/8 (41)	4 (102)	1-5/16 (34)	1-5/16 (34)	3 (75)	5-15/16 (150)	3.3 (1.5)
	2	2 (50)	4-1/4 (107)	1-5/16 (34)	1-5/16) (34)	3-3/8 (85)	6-3/4 (170)	4.0 (1.8)
	2-1/2	3-5/8 (92)	6-7/16 (163)	—	2-7/16 (62)	5-11/16 (145)	11-7/16 (290)	32.5 (14.8)
	3	3-15/16 (100)	6-7/16 (163)	—	2-7/16 (62)	6-1/16 (155)	12-3/16 (310)	34 (15.5)

Dimensions, Continued

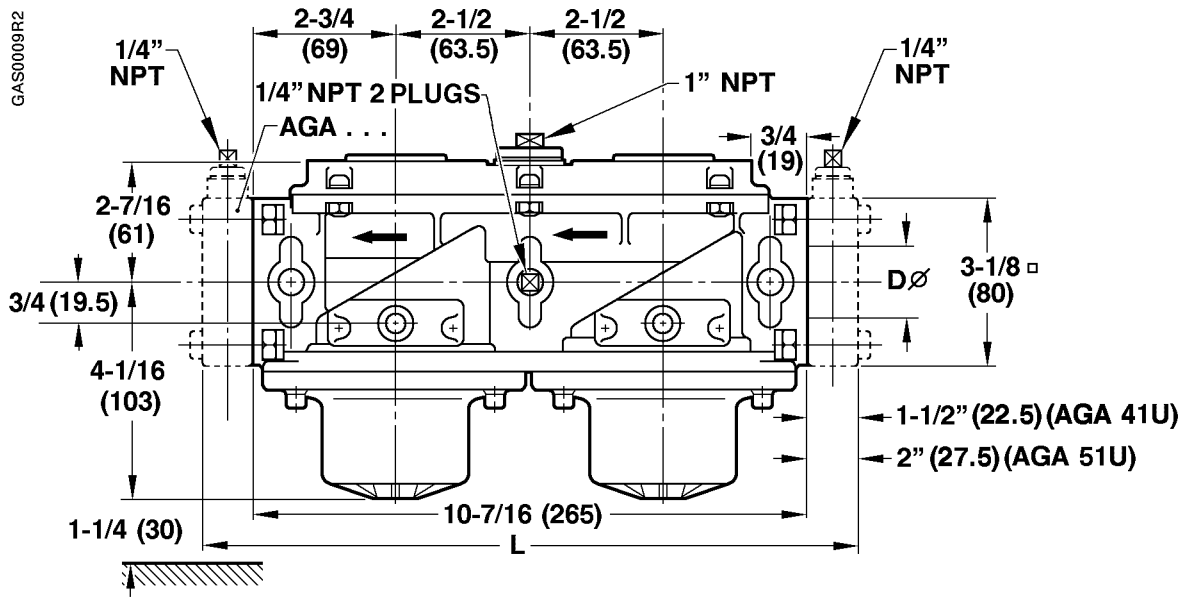

Table 5. VGD20… Models.

Valve Model	Nominal Size D Inches	L Inches (mm)	Weight Pounds (kg)
VGD20…	1-1/2	12-3/16 (310)	7 (3.2)
	2	12-5/8 (320)	6 (3.15)

Dimensions, Continued

Dimensions in Inches (mm)

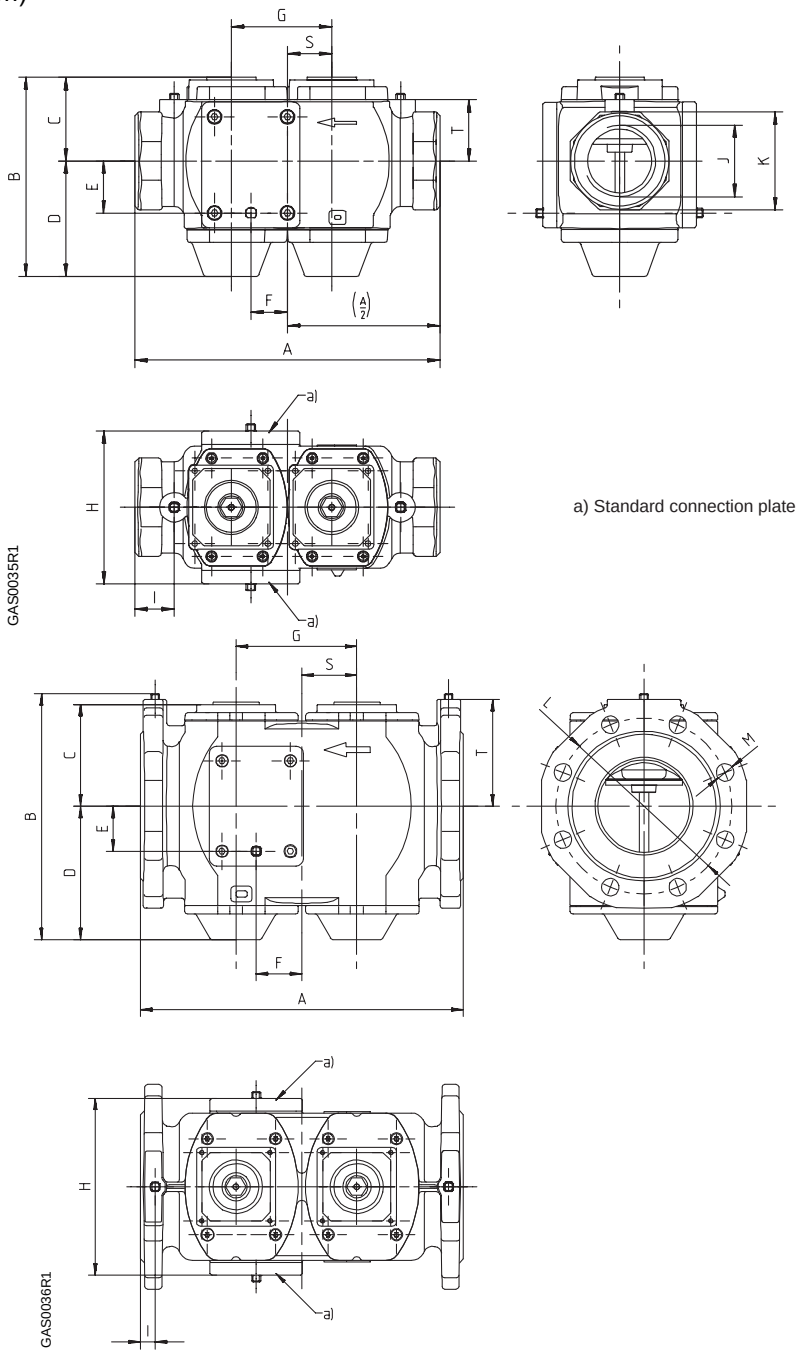

Table 6. VGD40… Models.

Valve Model	A	B	C	D	E	F	G	H	I	J	K *	L	M	S	T
VGD40.065U	12.09 (307)	7.00 (203)	3.25 (83)	4.63 (118)	2.09 (53)	1.46 (37)	4.02 (102)	6.14 (156)	1.57 (40)	2-1/2" NPT	SW 100	—	—	1.77 (45)	2.44 (62)
VGD40.080U	12.87 (327)	8.94 (227)	3.64 (93)	5.18 (132)	1.85 (47)	0.79 (20)	4.21 (107)	6.30 (160)	1.85 (47)	3" NPT	SW 120	—	—	2.34 (60)	2.83 (72)
VGD40.100U	13.78 (350)	10.50 (267)	4.33 (110)	5.70 (145)	1.93 (49)	1.95 (50)	5.16 (131)	7.56 (192)	0.63 (16)	—	—	d=7.50 (191)	d=0.75 (19)	2.34 (60)	4.55 (116)
VGD40.150U	18.90 (480)	13.29 (338)	5.71 (145)	7.40 (188)	2.09 (53)	2.30 (59)	6.61 (168)	10.31 (262)	0.63 (16)	—	—	d=9.49 (241)	d=0.91 (23)	3.54 (90)	5.61 (143)

* Spanner width in millimeters

Dimensions, Continued

Option a) Connection plate with 1/4" NPT plugged pressure test port
b) Vent connection plate with vent line connection and 1/4" NPT plugged pressure test port

Note: Plates a) and b) are interchangeable

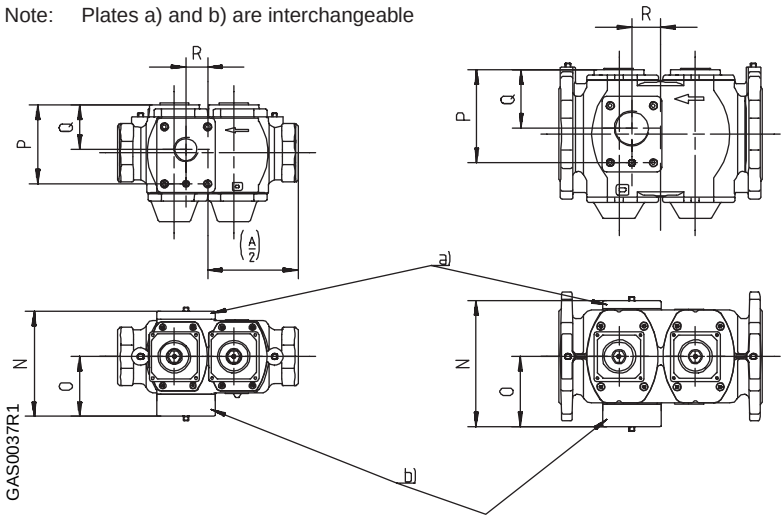

Table 7. VGD40… Dimensions in Inches (Millimeters).

Valve Model	N	O	P	Q	R	Weight Pounds (kg)
VGD40.065U	7.13 (181)	4.06 (103)	5.34 (136)	3.02 (77)	1.46 (37)	16 (7)
VGD40.080U	7.28 (185)	4.13 (105)	5.49 (140)	3.17 (81)	0.79 (20)	19 (3)
VGD40.100U	8.54 (217)	4.76 (121)	6.26 (159)	3.94 (100)	1.95 (50)	29 (13)
VGD40.150U	11.30 (287)	6.14 (156)	7.80 (198)	5.47 (139)	2.30 (59)	53 (24)

Table 8. Vent Connection Plate Dimensions.

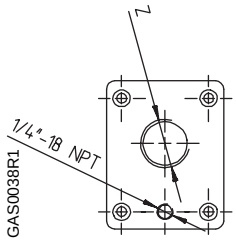

	VGD40.065U	VGD40.080U	VGD40.100U	VGD40.150U	Thread Vent Connection Size
AGA40.6580U	X	X			1-1/4" NPT
AGA40.0100U			X		2" NPT
AGA40.0150U				X	2-1/2" NPT

Information in this publication is based on current specifications. The company reserves the right to make changes in specifications and models as design improvements are introduced. Other product or company names mentioned herein may be the trademarks of their respective owners.
© 2005 Siemens Building Technologies, Inc.