Eclipse RatioAir Burners

Model RA0025 - 2000

Operating Instructions Edition 09.15

Version 3

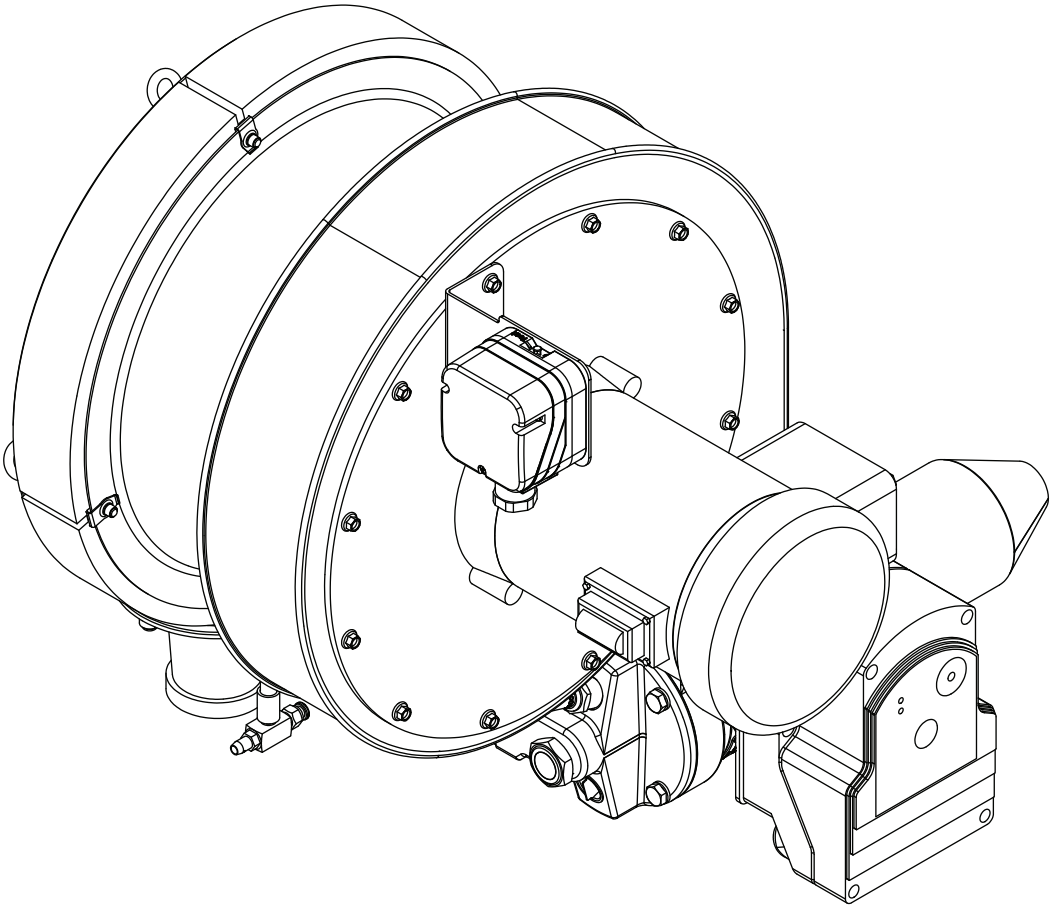

elster
Thermal Solutions

Copyright

Copyright 2010 by Eclipse, inc. All rights reserved worldwide. This publication is protected by federal regulation and shall not be copied, distributed, transmitted, transcribed or translated into any human or computer language, in any form or by any means, to any third parties, without the express written consent of Eclipse, inc.

Disclaimer Notice

In accordance with the manufacturer's policy of continual product improvement, the product presented in this brochure is subject to change without notice or obligation.

The material in this manual is believed adequate for the intended use of the product. If the product is used for purposes other than those specified herein, confirmation of validity and suitability must be obtained. Eclipse warrants that the product itself does not infringe upon any United States patents. No further warranty is expressed or implied.

Liability & Warranty

We have made every effort to make this manual as accurate and complete as possible. Should you find errors or omissions, please bring them to our attention so that we may correct them. In this way we hope to improve our product documentation for the benefit of our customers. Please send your corrections and comments to our Technical Documentation Specialist.

It must be understood that Eclipse's liability for its product, whether due to breach of warranty, negligence, strict liability, or otherwise is limited to the furnishing of replacement parts and Eclipse will not be liable for any other injury, loss, damage or expenses, whether direct or consequential, including but not limited to loss of use, income, or damage to material arising in connection with the sale, installation, use of, inability to use, or the repair or replacement of Eclipse's products.

Any operation expressly prohibited in this manual, any adjustment, or assembly procedures not recommended or authorized in these instructions shall void the warranty.

Document Conventions

There are several special symbols in this document. You must know their meaning and importance.

The explanation of these symbols follows below. Please read it thoroughly.

How To Get Help

If you need help, contact your local Eclipse representative. You can also contact Eclipse at:

1665 Elmwood Rd.
Rockford, Illinois 61103 U.S.A.
Phone: 815-877-3031
Fax: 815-877-3336
http://www.eclipsenet.com

Please have the information on the product label available when contacting the factory so we may better serve you.

ECLIPSE® Innovative Thermal Solutions www.eclipsenet.com
Product Name
Item #
S/N
DD MMM YYYY

⚠	This is the safety alert symbol. It is used to alert you to potential personal injurt hazards. Obey all safety messages that follow this symbol to avoid possible injury or death.
⚠ **DANGER**	Indicates a hazardous situation which, if not avoided, will result in death or serious injury.
⚠ **WARNING**	Indicates a hazardous situation which, if not avoided, could result in death or serious injury.
⚠ **CAUTION**	Indicates a hazardous situation which, if not avoided, could result in minor or moderate injury.
NOTICE	Is used to address practices not related to personal injury.
NOTE	Indicates an important part of text. Read thoroughly.

Table of Contents

Introduction **4**
Product Description 4
Audience 4
RatioAir Documents 4
Purpose 4
Safety **5**
Introduction 5
Safety 5
Capabilities 5
Operator Training 5
Replacement Parts 5
Installation **6**
Handling & Storage 6
Approvals of Components 6
Checklist Before Installation 7
Installing the Flame Sensor 7
Burner Installation 7
Gas Piping 9
Checklist After Installation 11
Adjustment, Start & Stop **12**
Adjustment Procedure 12
Step 1: Reset the System 12
Step 2: Set Low Fire Air 13
Step 3: Ignite the Burner 14
Step 4: Set Low Fire Gas (if required) 18
Step 5: Verify Settings 19
Maintenance & Troubleshooting **20**
Monthly Checklist 20
Yearly Checklist 20
Troubleshooting Procedures 21
Appendix ..... **i**

Introduction 1

Product Description

The RatioAir is a nozzle-mix type burner designed for direct and indirect air heating in a wide range of applications including:

- Industrial Ovens and Furnaces
- Glass Lehrs
- Indirect Fired Air Heaters
- RTO Incinerators
- After Burners
- Galvanizing Kettles
- Waterbath Vaporizers

The burner package includes a combustion air blower and an air/gas ratio regulator to fire over a wide gas turndown range with controlled ratio. RatioAir burners are available with three different outlet tube velocity characteristics (standard, medium and high velocity), and are capable of outlet speeds of 250 ft/s with the medium velocity and 500 ft/s with the high velocity tubes.

The burner is designed for:

- Efficient Ratio Controlled Combustion
- Reliable Burner Operation
- Simple Burner Adjustment
- Direct Spark Ignition
- Multiple Fuel Capability

A wide variety of options and configurations are available due to the modular design of the burner.

Audience

This manual has been written for people who are already familiar with all aspects of a nozzle-mix burner and its add-on components, also referred to as “the burner system”.

These aspects are:

- Installation
- Use
- Maintenance

The audience is expected to have previous experience with this type of equipment.

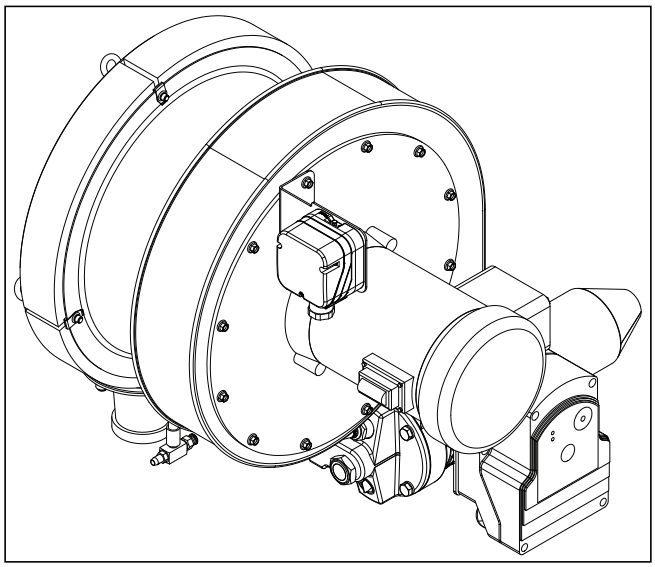

Figure 1.1 RatioAir Burner

RatioAir Documents

Installation Guide No. 115

- This document

Datasheet, Series 115

- Available for individual RA models
- Required to complete design and selection

Design Guide No. 115

- Used with Datasheet to complete installation

Related Documents

- EFE 825 (Combustion Engineering Guide)
- Eclipse Bulletins and Info Guides: 710, 732, 760, 818, 830, 832, 852, 854, 856, 610, 820, 930

Purpose

The purpose of this manual is to ensure the installation and adjustment of a safe, effective and trouble-free combustion system.

Safety

2

Important notices which help provide safe burner operation will be found in this section. To avoid personal injury and damage to the property or facility, the following warnings must be observed. All involved personnel should read this entire manual carefully before attempting to start or operate this system. If any part of the information in this manual is not understood, contact Eclipse before continuing.

Safety Warnings

DANGER

- **The burners, described herein, are designed to mix fuel with air and burn the resulting mixture. All fuel burning devices are capable of producing fires and explosions if improperly applied, installed, adjusted, controlled or maintained.**
- **Do not bypass any safety feature; fire or explosion could result.**
- **Never try to light a burner if it shows signs of damage or malfunction.**

WARNING

- **The burner and duct sections are likely to have HOT surfaces. Always wear the appropriate protective equipment when approaching the burner.**
- **Eclipse products are designed to minimize the use of materials that contain crystalline silica. Examples of these chemicals are: respirable crystalline silica from bricks, cement or other masonry products and respirable refractory ceramic fibers from insulating blankets, boards, or gaskets. Despite these efforts, dust created by sanding, sawing, grinding, cutting and other construction activities could release crystalline silica. Crystalline silica is known to cause cancer, and health risks from the exposure to these chemicals vary depending on the frequency and length of exposure to these chemicals. To reduce the risk, limit exposure to these chemicals, work in a well-ventilated area and wear approved personal protective safety equipment for these chemicals.**

NOTICE

- **This manual provides information regarding the use of these burners for their specific design purpose. Do not deviate from any instructions or application limits described herein without written approval from Eclipse.**

Capabilities

Only qualified personnel, with sufficient mechanical aptitude and experience with combustion equipment, should adjust, maintain or troubleshoot any mechanical or electrical part of this system. Contact Eclipse for any needed commissioning assistance.

Operator Training

The best safety precaution is an alert and trained operator. Train new operators thoroughly and have them demonstrate an adequate understanding of the equipment and its operation. A regular retraining schedule should be administered to ensure operators maintain a high degree of proficiency. Contact Eclipse for any needed site-specific training.

Replacement Parts

Order replacement parts from Eclipse only. All Eclipse approved valves or switches should carry UL, FM, CSA, CGA and/or CE approval where applicable.

Installation

3

In this section you will find information and instructions needed to install the burner and system components.

Handling & Storage

NOTICE

- **When refractory combustion block is supplied with the burner, it is critical that the instructions for handling and storage are followed. The refractory should be considered fragile; improper handling and storage will cause premature failure.**

Handling

- Inspect the system, being sure the components are clean and free of damage.
- Use the appropriate support and handling equipment when lifting the burner.
- Protect all components on the system from weather, damage, dirt and moisture.
- Protect the system and its components from excessive temperatures and humidity.

Storage

- Make sure the components are clean and free of damage.
- Store the components in a cool, clean, dry room.
- Keep all system components in their original packaging as long as possible

Approval of Components

Limit Controls & Safety Equipment

All limit controls and safety equipment must comply with all applicable local codes and/or standards and must be listed for combustion safety by an independent testing agency. Typical application examples include:

- American: NFPA 86 with listing marks from UL, FM, CSA
- European: EN 746-2 with CE mark from TuV, Gastec, Advantica

Electrical Wiring

All the electrical wiring must comply with all applicable local codes and/or standards such as:

- NFPA Standard 70
- IEC60364
- CSA C22
- BS7671

Gas Piping

All the gas piping must comply with all applicable local codes and/or standards such as:

- NFPA Standard 54
- ANSI Z223
- EN 746-2

Where to Get the Standards:

The NFPA Standards are available from:
National Fire Protection Agency
Batterymarch Park
Quincy, MA 02269
www.nfpa.org

The ANSI Standards are available from:
American National Standard Institute
1430 Broadway
New York, NY 10018
www.ansi.org

The UL Standards are available from:
333 Pfingsten Road
Northbrook, IL 60062
www.ul.com

The FM Standards are available from:
1151 Boston-Providence Turnpike
PO Box 9102
Norwood, MA 02062
www.fmglobal.com/approvals

Information on the EN standards and where to get them is available from:

Comité Européen de Normalisation
Stassartstraat 36
B-1050 Brussels
Phone: +32-25196811
Fax: +32-25196819
www.cen.eu

Comité Européen de Normalisation Electronique
Stassartstraat 36
B-1050 Brussels
Phone: +32-25196871
Fax: +32-25196919
www.cenelec.org

Checklist Before Installation

Air Supply

Provide an opening in the burner room of at least one square inch per 4000 BTU/hr (6 cm^2 per 1 kW) to supply the burner intake with fresh, outdoor, combustion air.

If there are corrosive fumes or materials in the surrounding air, find an uncontaminated source to supply air to the burner, or provide a sufficient air filtering system.

Exhaust

Do not allow exhaust fumes to accumulate in the work area. Provide some positive means for exhausting from the furnace and the building.

Access

Make sure the burner is installed in such a way to allow easy access for inspection and maintenance.

Environment

Make sure the local environment matches the original operating specifications. Check the following items:

- Voltage, frequency and stability of the electrical power
- Fuel type and supply pressure of the fuel
- Availability of enough fresh, clean combustion air
- Humidity, altitude and temperature of air
- Presence of damaging corrosive gases in the air
- Prevent direct exposure to water

Installing the Flame Sensor

1. Install the flame sensor into the 1/2" NPT opening in the rear cover.

2. Make sure the flame sensor of a burner is connected to the electrical circuit for that burner.

⚠ DANGER

- **If you connect the flame sensor of a burner to the electrical circuit of the wrong burner, you can cause fires and explosions.**

There are two different types of flame sensors; UV scanner and flamerod.

UV Scanner

For detailed information on how to install and connect a UV scanner, refer to scanner information guide.

Flame Rod

NOTE: Only specific burner sizes with alloy or silicon carbide combustors can use a flamerod (see specific burner datasheets).

For detailed information on how to install and connect a flamerod, refer to Bulletin/Info guide 832.

Installing the Spark Plug

Install the spark plug into the opening in the rear cover.

NOTE: Do ***not*** apply any grease to the threads of the spark plug. You can cause inadequate grounding of the spark plug if you apply grease to it. Poor grounding of the spark plug results in a weak spark.

NOTICE

- **Adjustments may vary from Eclipse published values if the flame controls other than those recommended in the Design Guide are used. Consult with the engineer who specified the alternate control for limitations.**

Burner Installation

Chamber Opening

Provide an opening in the chamber wall at least 1/2" (12mm) larger in diameter than the outside diameter of the combustor, or 1/2" (12mm) larger in height and width than the refractory block (1/4" - 6mm per side). Refer to the Chamber Opening diagram.

Provide an accessible pressure tap on the chamber wall to measure the pressure inside the firing chamber. The pressure tap should be located near the burner.

Mounting Pattern

Attach mounting bolts to the chamber wall. Position these bolts to match the clearance holes **"C"** on the burner mounting flange. Refer to the appropriate RatioAir datasheet.

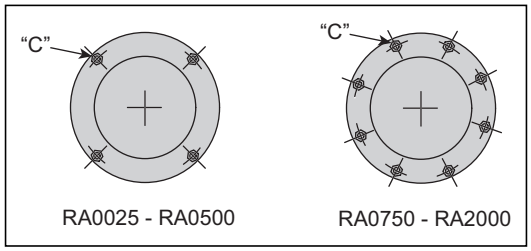

Figure 3.1. Mounting Pattern

Chamber Wall

Make sure the chamber wall is strong enough to support the weight of the burner. If necessary, reinforce the mounting area. Refer to the Chamber Wall and Mounting Pattern diagrams.

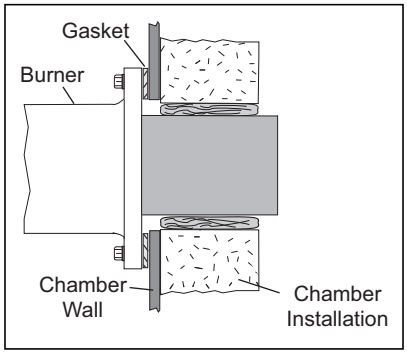

Figure 3.2. Chamber Wall

Refractory furnace walls must allow for thermal expansion as recommended by the refractory supplier - the wall should apply no stress on the burner block or refractory layer surrounding the burner block. Expansion joints built into the furnace wall should permit the furnace shell, burner block holder, combustor or burner block and surrounding refractory to move as a unit in the event of unequal expansion of the refractory wall and furnace shell.

The combustor or combustion block must not extend beyond the inside of the furnace wall more than 1" (24mm). Beyond this length it is necessary to add a spacer on the outside of the furnace to keep the end of the combustor or combustion block within 1/2" (12mm) of the inside furnace wall.

If the combustor or burner block is shorter than the furnace wall thickness the block or combustor should be recessed into the wall. To prevent refractory overheating, a 45° chamber should be applied.

Burner Mounting

Mount burner to chamber wall using customer supplied nuts and lock washers.

Alloy Combustor (Figure 3.3)

1. Ensure the gasket ❶ is installed between the burner and the chamber wall ❷.
2. Ensure that gasket ❶ does not leak.
3. Check the size of the clearance. If the gap ❸ around the firing tube is larger than 1/2", then pack the gap with ceramic fiber ❹.

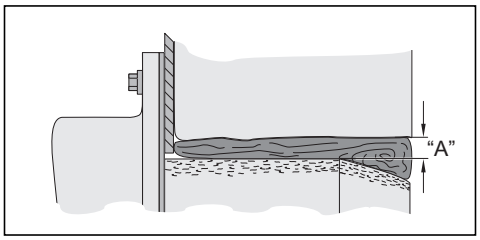

Figure 3.3. Alloy Combustor

Silicon Carbide (SiC) Combustor Only (Figure 3.4)

Ensure the gasket ❶ is installed between the burner flange and chamber wall ❷.

1. Ensure gasket ❺ is installed between SiC tube and flange ❻.
2. Ensure neither gaskets ❶ nor ❺ leaks.
3. Check the size of the clearance. If the gap around the firing tube is larger than 1/2", pack the gap with ceramic fiber ❹.

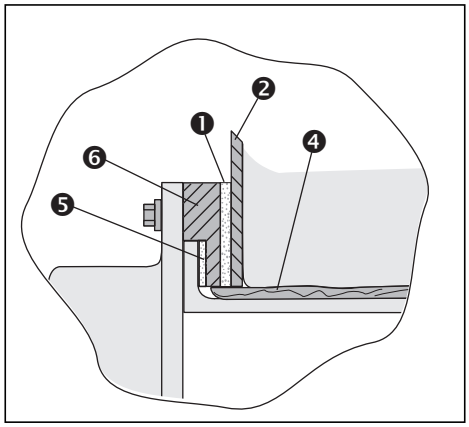

Figure 3.4. Silicon Carbide

Refractory Block (Figure 3.5)

1. Ensure gasket ❶ is installed between burner ❸ and block holder ❹.

2. Ensure gasket ❺ is installed between block holder ❹ and chamber wall ❷.

3. Support the weight of refractory block ❻ with hard brick work anchored to the furnace shell ❼. Fill the 1/2" space between block ❻ and the three unsupported sides with soft gasket material ❽.

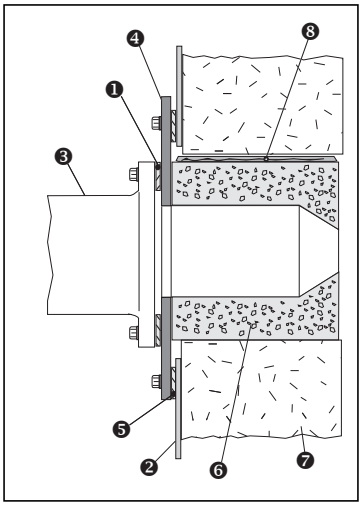

Figure 3.5. Refractory Block

Large Refractory Blocks

On sizes RA0500 thru RA2000; the block must be tightly surrounded by a collar made of brick, plastic refractory, or a castable refractory of at least 4" (10 cm) minimum thickness on all sides of the block. If the collar is cast around the block, a thin plastic film (i.e. Saran Wrap® or Glad Wrap®) should be wrapped around the block to keep moisture from leaching into it. The collar should be anchored to the furnace shell with suitable anchors and must be constructed to rest on a surface capable of supporting its weight, such as a hearth or a solid refractory or brick wall. For furnaces that are unable to support the weight of the refractory block, a stainless steel shelf can be welded to the shell to support the collar.

NOTE: All refractory blocks are cured at a minimum temperature of 550°F (300°C) prior to shipment.

NOTE: The correct insulation of burner combustion blocks in furnaces results in longer block life and adds value by reducing downtime and maintenance.

Block Holder Temperature

Excessive block holder temperatures can cause problems. Overheating can be reduced by carefully sealing the burner blocks in the wall to prevent the leakage of hot gases back to the furnace shell.

In high temperature (>1,400°F, 760°C) fiber-wall furnace installations, the length of the metallic wrapper should extend no farther than the point in the wall where the interface temperature is higher than 1800°F (760°C).

Vertical Down Firing Blocks (Figure 3.6)

1. Down firing blocks may be suspended by customer supplied hangers ❷ attached to the burner body mounting bolts.

2. Hangers should be attached to structural support ❶.

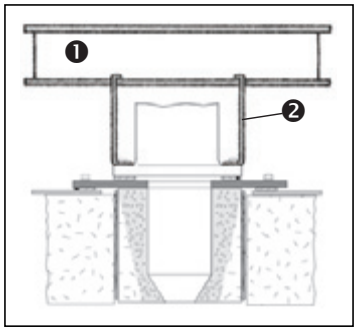

Figure 3.6. Vertical Down Firing Block

Gas Piping

Burner Piping

The burner is factory assembled and shipped as ordered.

NOTE: If it is necessary to redirect piping, be sure the:

- ratio regulator spring column ❶ is pointing down.
- arrow on the ratio regulator points in the direction of gas flow.
- integral fuel orifice and o-rings ❷ are re-installed in the same orientation with respect to the fuel flow.
- same straight run of pipe ❸ remains between the ratio regulator and the burner.

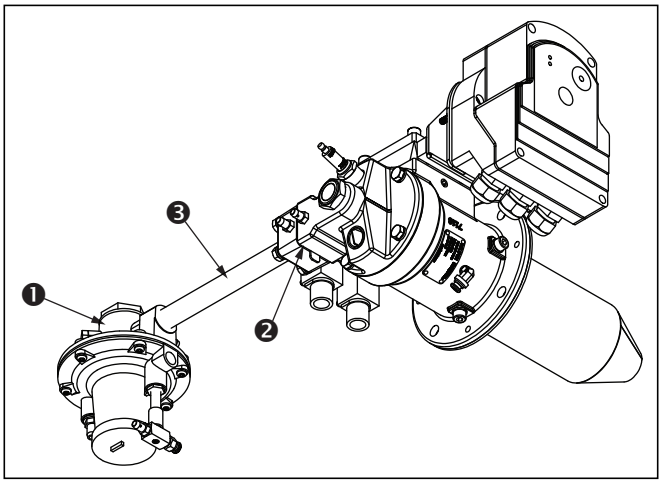

Figure 3.7. Burner Piping

Supply Piping

Inlet pressure to the ratio regulator must stay within specified limits. Refer to the appropriate RatioAir datasheet.

- Locate the valve train close to the burner. The gas must reach the burner during the fixed trial for ignition.
- Appropriately size shut off valves in the valve train.
- Make sure piping is large enough to accommodate flow required to meet burner input.
- Minimize piping elbows.

Bypass Start Gas Piping (Optional)

Install the piping as shown in the schematics using the following guidelines:

- Locate the bypass start gas solenoids ❶ close to the burner. The gas must reach the burner during the trial for ignition period.
- Minimize piping elbows.
- Install an adjustable limiting orifice (ALO) ❷ for start gas adjustment. Refer to Bulletin 728 and 730 for further information.
- Include a straight run of pipe at least 8" (192mm) long ❸ before (upstream from) the start gas orifice ❺ (optional) and at least 4" (96mm) long ❹ after (downstream from) the start gas orifice.

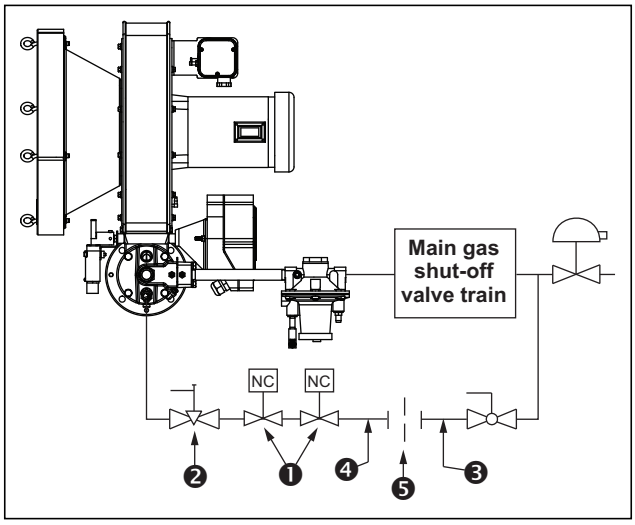

Figure 3.8. Bypass Start Gas Piping

NOTICE

- **This is an example. Please verify that piping complies with all applicable codes and/or standards.**

Pipe Connections

- Installation of a pipe union in the gas line is recommended to simplify burner removal.
- Use of flexible pipe is optional.

NOTE: Flexible pipe causes higher pressure drops than standard pipe. Consider this when sizing your gas lines.

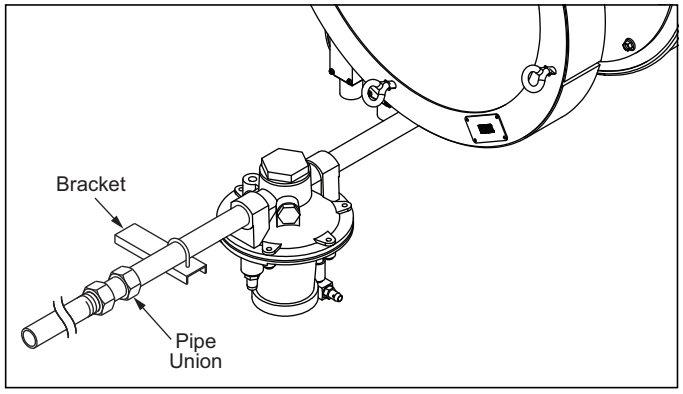

Figure 3.9. Piping Connections

Piping Support

Use brackets or hangers to support the gas piping. If you have questions, consult your local gas company.

Control Motor

Install a control motor to modulate the air butterfly valve if not previously installed on the burner.

NOTE: Be sure the control motor shaft and air butterfly valve shaft are aligned properly. In some cases washers may be used as shims (stacked 0, 1, or 2 high) to ensure proper alignment. Additionally, a flexible coupling can be used to handle minor misalignment.

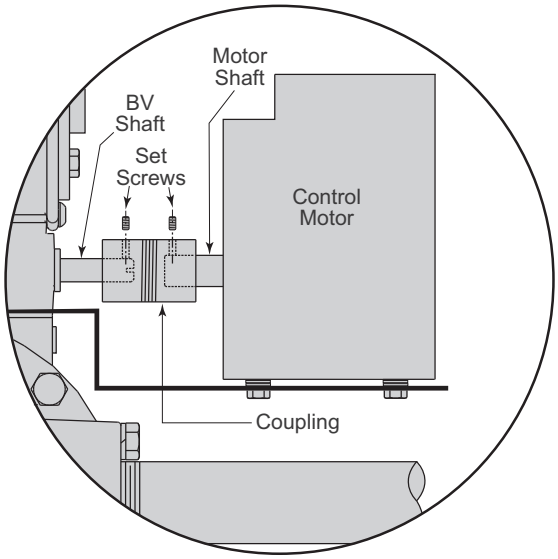

Figure 3.10. Control Motor Mounting

Checklist After Installation

To verify the system was properly installed, perform the following checks:

1. Be sure there are no leaks in the gas lines.

2. Be sure all the components contained in the flame monitoring and control system are properly installed. This includes verifying that:
   - all the switches are installed in the correct locations.
   - all wiring, pressure, and impulse lines are properly connected.

3. Be sure all components of the spark ignition system are installed and functioning properly.

4. Be sure the blower rotates in the proper direction. If the rotation is incorrect, have a qualified electrician rewire the blower to rotate in the proper direction.

5. Be sure all valves are installed in the proper location and correctly oriented relative to the flow direction.

Adjustment, Start and Stop

4

In this chapter, you will find instructions on how to adjust, start, and stop the burner system. Become familiar with burner control methods before attempting to make adjustments.

DANGER

- **The RatioAir burners, described herein, are designed to mix fuel with air and burn the resulting mixture. All fuel burning devices are capable of producing fires and explosions if improperly applied, installed, adjusted, controlled, or maintained.**
- **Do not bypass any safety features. This can cause fires and explosions.**
- **Never try to light a burner if it shows signs of damage or malfunction.**

Adjustment Procedure

If you are adjusting the burner system for the first time, then you must follow these steps:

Step 1: Reset the System

1. Set the low gas pressure switch to 20% below the “Main Gas Inlet Pressure” range as specified in the appropriate datasheet.
2. Set the high gas pressure switch to 20% above the “Main Gas Inlet Pressure” range as specified in the appropriate datasheet.
3. Close all the burner gas valves, manual and automatic.
4. Try to ignite the burner; be sure the flame monitoring system indicates a flame failure.
5. Activate the pressure switches and other limit interlocks. Be sure the switches fail as intended in the event of a power failure.

DANGER

- **If simulated limits or simulated flame failure do not shut down the fuel system within the required failure response time, immediately correct the problem before proceeding.**

6. If the burner is firing into a duct or chamber with a circulating fan, start the fan to produce a full process air flow past the burner.
7. Adjust main gas inlet pressure to the ratio regulator within the range specified in the appropriate datasheet.

WARNING

- **Gas inlet pressures must stay within the specified range. Pressure above the specified range can damage the ratio regulator.**
- **Pressure below the specified range can impair the ability of the ratio regulator to control the gas flow.**
- **Operating the system outside the specified range can cause excess fuel consumption and the possible accumulation of unburned fuel in the chamber. In extreme cases, this accumulation of unburned fuel may cause fires or explosions.**

8. Verify that the actuator opens the air BV towards the back of the burner as shown in Figure 4.1. If it doesn’t, refer to the actuator’s literature for instructions on how to reverse the direction.

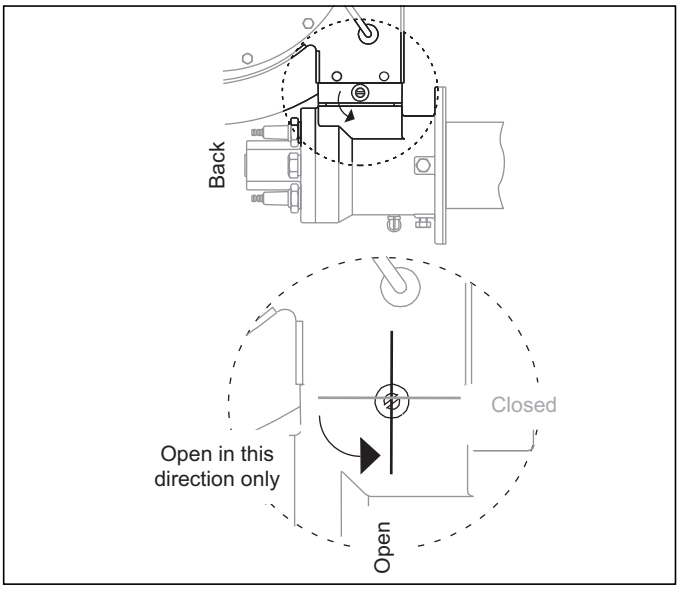

Figure 4.1 Air Butterfly Valve

Step 2: Set Low Fire Air

1. Start combustion air blower.
2. Drive control motor to low fire position.
3. Measure air differential pressure between tap “C” and combustion chamber. See the appropriate series 115, datasheet.

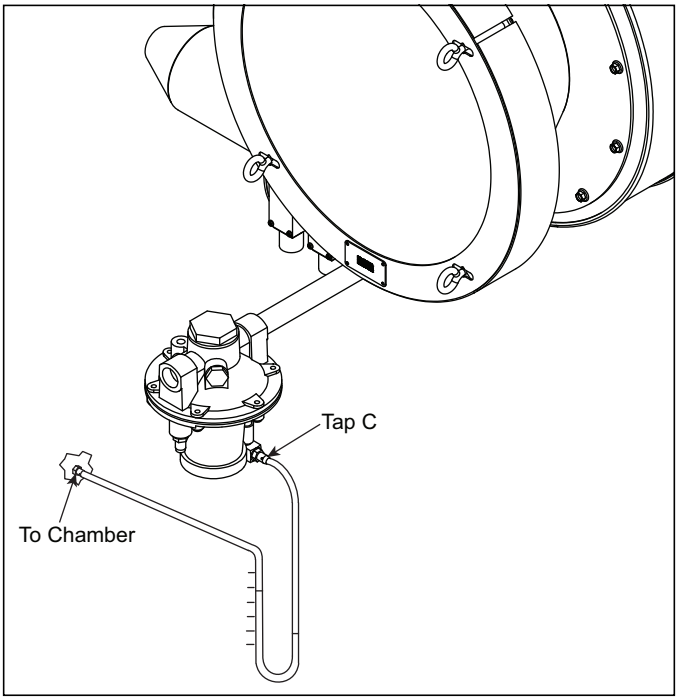

Figure 4.2.

NOTE: The pressure tap is in the open position when the screw inside the tap is unscrewed approximately 1/2 turn. Do not remove screw. Be sure to tighten pressure tap screw clockwise to the closed position after pressure measurements have been taken.

4. Set low fire air.

   a. For air control actuators that have a coupling with set screws, as shown in Figure 4.3, loosen the set screw ❶ on the burner side of the coupling ❷.

   For air controlled actuators that have a keyed or pinned coupling, as shown in Figure 4.4, please refer to the cam adjustment section of the actuator’s installation literature for instructions on releasing the cam’s low or off start position.

   b. There is a slot in the end of the butterfly valve shaft that is parallel to the air damper. This slot is used for visual indication of the butterfly valve position. The butterfly valve is closed when the shaft slot is perpendicular to the direction of air flow through the butterfly valve. See Figure 4.5.

   c. Rotate the air butterfly valve shaft to a fully closed position. (Holes in the butterfly valve will supply low fire air.)

   When firing into a positive chamber pressure, rotate the air butterfly valve from the closed position in the direction of actuator travel to obtain a minimum 0.3" w.c. (0,8 mbar) air differential pressure.

   d. For air control actuators that have a coupling with set screws, as shown in Figure 4.3, hold the butterfly valve firmly in place and tighten the set screw ❷.

   For air control actuators that have a keyed or pinned coupling, as shown in Figure 4.4, hold the butterfly valve firmly in place and re-engage the cam’s low or off starting position.

   e. High fire air adjustment is not required if the burner is firing into a neutral pressure chamber and a 90° travel control motor is used. It may be necessary to limit control motor stroke to less than 90° if firing into a large negative chamber. Contact Eclipse for further information.

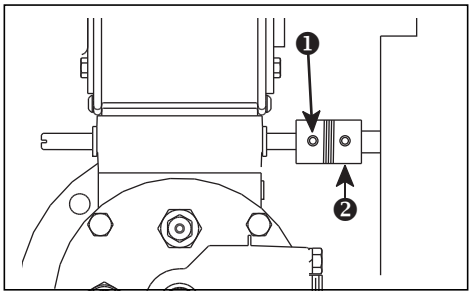

Figure 4.3. Actuator with Flexible Coupling

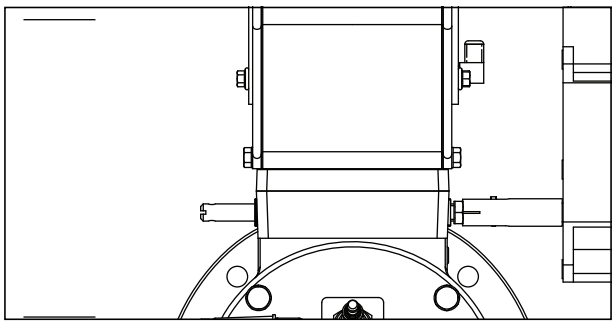

Figure 4.4. Actuator with Keyed Coupling

5. Verify high fire air:

   a. Drive control motor to high fire, full open.
   b. Compare the high fire air differential pressure between **Tap C** and the combustion chamber to the approximate datasheet chart “Air Δp vs. Input”. If high fire air is insufficient, refer to section 5, “Troubleshooting & Maintenance”, in this document.

6. Return the control motor to the low fire position.

7. Close the pressure taps.

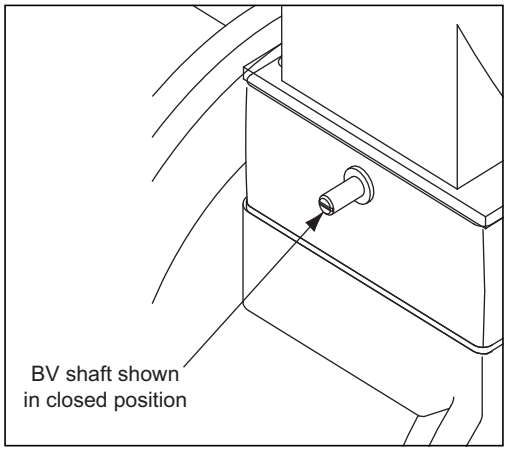

Figure 4.5. Air Butterfly Valve Shaft

Step 3: Ignite the Burner

WARNING

- **This procedure is written with the assumption the burner has a flame monitoring control system installed and operating. A proper purge cycle must be part of the system and purge timing should not be bypassed.**

Determine system layout and use the applicable ignition procedure.

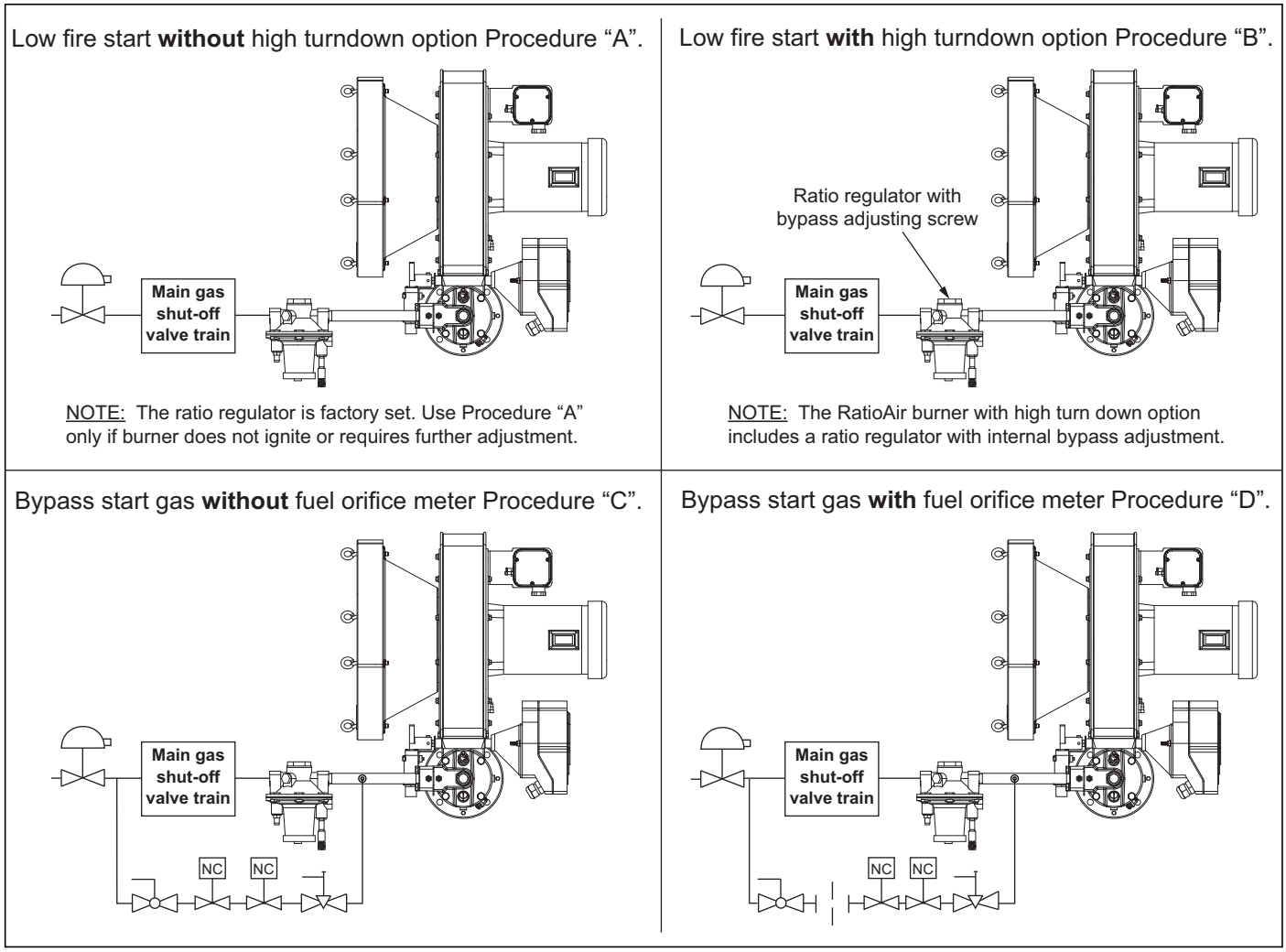

Figure 4.6.

Procedure A: Low fire start *without* high turndown option

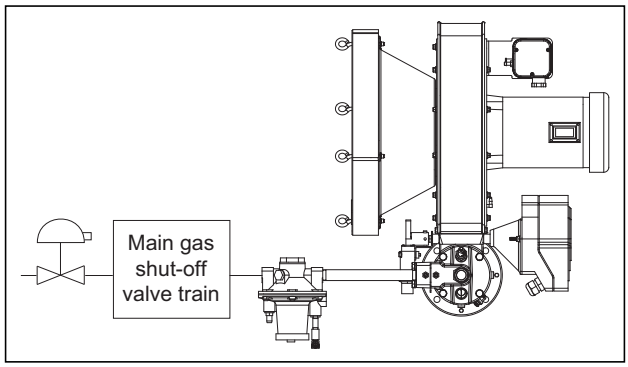

Figure 4.7. Procedure A

1. Drive control motor to low fire.
2. Be sure combustion air blower is running.

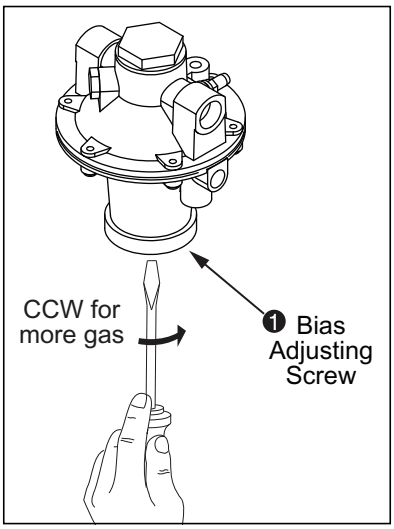

Figure 4.8. Ratio Regulator

3. Open main gas manual shut off valves.
4. Set system control to stay at low fire during and after ignition sequence.
5. Attempt to ignite burner.
6. If burner does not ignite:
   a. Attempt to ignite burner again to purge air from the gas piping.
   b. If burner still does not ignite, turn bias adjusting screw ❶ a half turn counterclockwise to increase gas flow.
   c. Attempt to ignite burner.
   d. Repeat steps **b** and **c** until burner ignites. If necessary, refer to Chapter 5 for troubleshooting tips.
7. Flame signal strength: Adjust gas flow with bias adjusting screw ❶ for lowest gas flow that maintains a stable flame signal:
   - counterclockwise, for more fuel
   - clockwise, for less fuel
8. Verify low fire flame:
   a. Shut off gas. When chamber temperature is below 250°F (121°C), shut off combustion air blower.
   b. Restart combustion air blower and ignite burner.
   c. Verify repeatability of ignition and low fire flame signal.

Procedure B: Low fire start *with* high turndown option

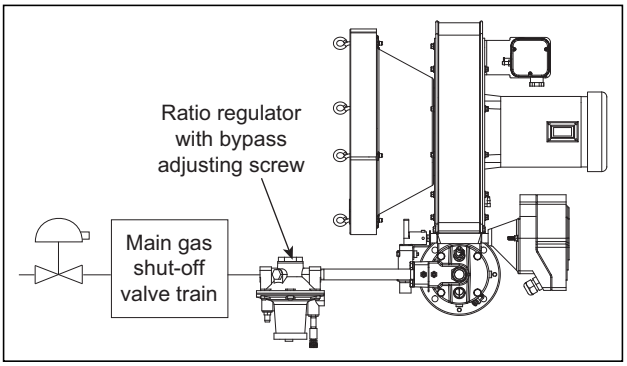

Figure 4.9. Procedure B

NOTE: The RatioAir burner with high turndown option includes a ratio regulator with internal bypass adjustment.

1. Drive control motor to low fire.
2. Be sure combustion air blower is running.
3. Open main gas manual shut off valves.

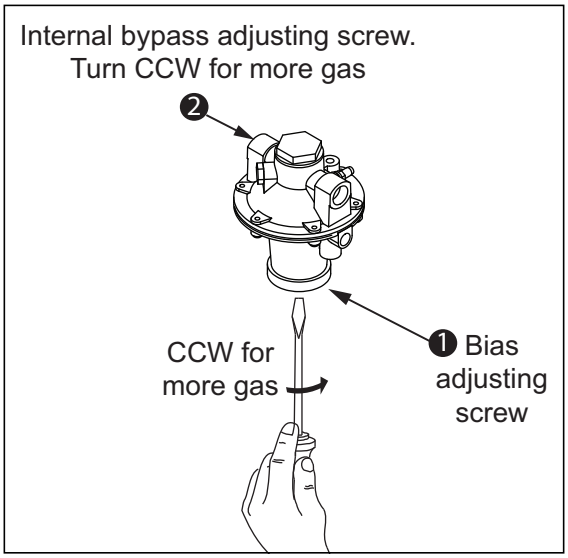

Figure 4.10. Ratio Regulator with Internal Bypass Adjusting Screw

4. Close internal bypass adjusting screw ❷ by turning it clockwise to closed position.
5. Set system control to stay at low fire during and after ignition sequence.
6. Attempt to ignite burner.
7. If burner does not ignite:
   a. Attempt to ignite burner again to purge air from the gas piping.
   b. If burner still does not ignite, turn bias adjusting screw ❶ a half turn counterclockwise to increase gas flow.
   c. Attempt to ignite burner.
   d. Repeat steps **b** and **c** until burner ignites. If necessary, refer to Chapter 5 for troubleshooting tips.
8. After burner ignites, slowly decrease gas flow with bias adjusting screw ❶. Decrease gas flow until the flame signal becomes erratic. (Refer to flame monitoring relay literature for a description of an erratic flame signal.)
9. If burner has gone out: Repeat ignition sequence. Turn internal bypass adjusting screw ❷ a half turn counterclockwise to increase gas flow at each attempt until burner lights.
10. Flame signal strength: Adjust gas flow with internal bypass adjusting screw ❷ for lowest gas flow that maintains a stable flame signal:
    - counterclockwise, for more fuel
    - clockwise, for less fuel
11. Verify low fire flame:
    a. Shut off gas. When chamber temperature is below 250°F (121°C), shut off combustion air blower.
    b. Restart combustion air blower and ignite burner.
    c. Verify repeatability of ignition and low fire flame signal.

Procedure C: Bypass start gas *without* fuel orifice meter

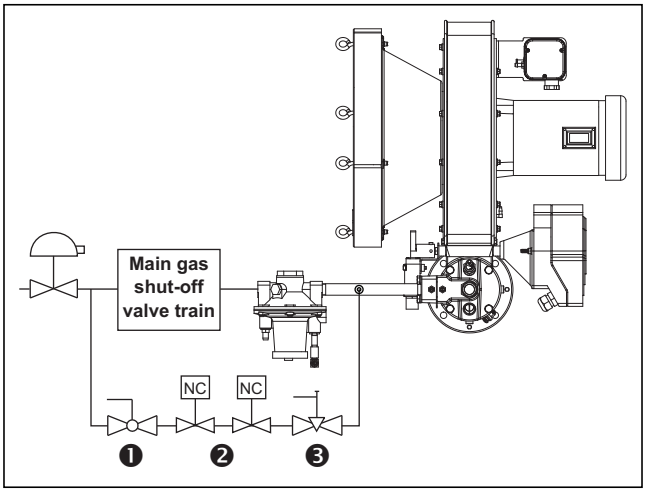

Figure 4.11. Procedure C

1. Drive control motor to low fire.
2. Be sure combustion air blower is running.
3. Be sure main gas manual shut off valves are closed.
4. Open main gas manual shut off valve ❶ in the bypass.

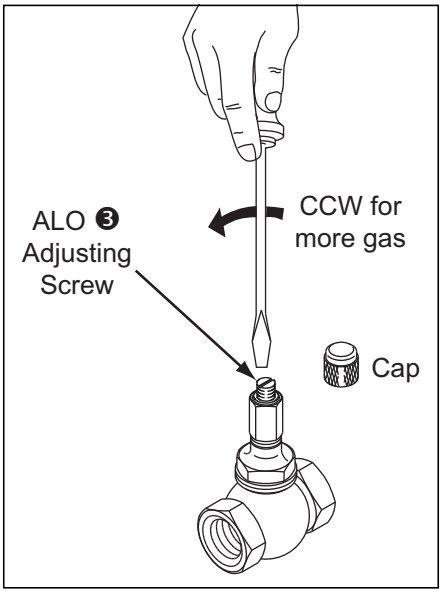

Figure 4.12. Adjusting Limiting Orifice (ALO)

5. Set the system to operate on bypass gas only.
6. Attempt to ignite burner by energizing spark and bypass gas solenoid valves ❷.
7. If burner does not ignite:
   a. Attempt to ignite burner again to purge air from the gas piping.
   b. If burner still does not ignite, turn ALO adjusting screw ❸ a half turn counterclockwise to increase gas flow.
   c. Attempt to ignite burner.
   d. Repeat steps **b** and **c** until burner ignites. If necessary, refer to Chapter 5 for troubleshooting tips.
8. Flame signal strength: Adjust gas flow ALO adjusting screw ❸ for lowest gas flow that maintains a stable flame signal:
   - counterclockwise, for more fuel
   - clockwise, for less fuel
9. Verify low fire flame:
   a. Shut off gas. When chamber temperature is below 250°F (121°C), shut off combustion air blower.
   b. Restart combustion air blower and ignite burner.
   c. Verify repeatability of ignition and low fire flame signal.

Procedure D: Bypass start gas *with* fuel orifice meter

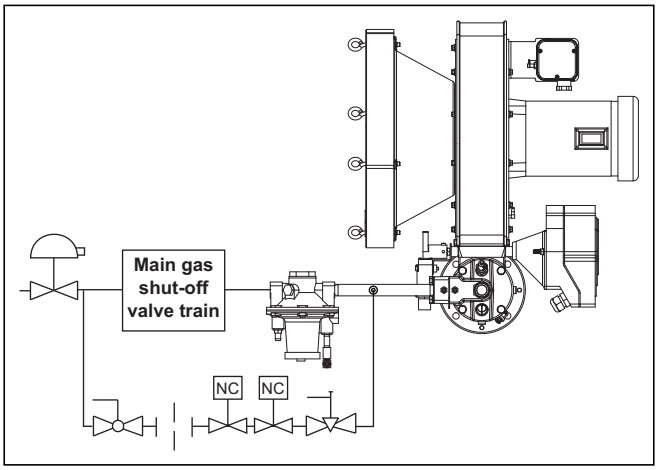

Figure 4.13. Procedure D

1. Drive control motor to low fire.
2. Be sure combustion air blower is running.
3. Be sure main gas manual shut off valves are closed.
4. Prepare to measure bypass gas flow at the fuel orifice meter ❹.
5. Open manual shut off valve ❶ in the bypass.
6. Set the system to operate on bypass gas only.
7. Attempt to ignite burner by energizing spark and bypass gas solenoid valves ❷.

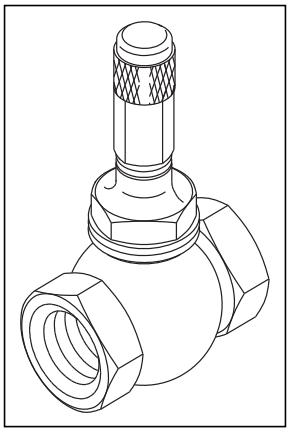

Figure 4.14. Adjusting Limiting Orifice (ALO)

8. If burner does not ignite:
   a. Attempt to ignite burner again to purge air from the gas piping.
   b. If burner still does not ignite, turn ALO adjusting screw ❸ a half turn counterclockwise to increase gas flow.
   c. Attempt to ignite burner.
   d. Repeat steps **b** and **c** until burner ignites. If necessary, refer to Chapter 5 for troubleshooting tips.
9. Adjust bypass gas flow with ALO adjusting screw ❸ to achieve the low fire gas flow indicated on datasheet. Refer to the fuel orifice meter literature for instructions on flow measurement.

   NOTE: When firing into negative or fluctuating chamber pressures, a higher bypass gas flow may be necessary.
10. Verify the bypass gas flame:
    a. Shut off gas. When chamber temperature is below 250°F (121°C), shut off combustion air blower.
    b. Restart combustion air blower and ignite burner.
    c. Verify repeatability of ignition and low fire flame signal.

Step 4: Set Low Fire Gas (only required if bypass start is used)

WARNING

- **This procedure is written with the assumption the burner has a flame monitoring control system installed and operating. A proper purge cycle must be part of the system control and purge timing should not be bypassed.**

This step is only necessary when bypass start gas is used. Determine the piping method (low fire or bypass) and ratio regulator installed (standard or high turndown), and proceed with the applicable procedure:

Bypass Start Gas with Standard Turndown Ratio Regulator

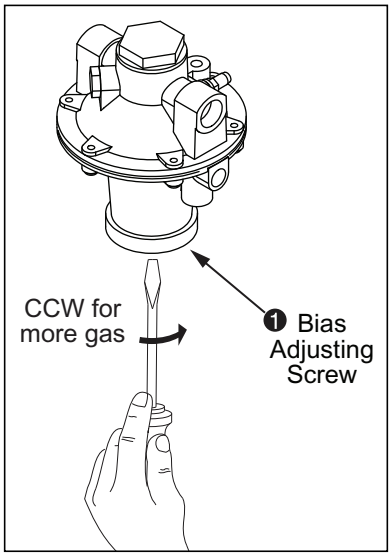

Figure 4.15. Ratio Regulator

1. Open all manual gas shut off valves.
2. Set system control to stay at low fire during and after ignition sequence.
3. Ignite the burner.
4. If burner goes out due to main gas flame failure, turn bias adjusting screw ❶ a half turn counterclockwise to increase gas flow. Repeat ignition sequence until burner lights.
5. Flame signal strength: adjust gas flow with bias adjusting screw ❶ for lowest gas flow that maintains a stable flame signal:
   - counterclockwise, for more fuel
   - clockwise, for less fuel
6. Verify low fire flame:
   a. Drive control motor from low fire and back. Verify low fire and stable flame signal are repeated.
   b. Turn the burner off and repeat the ignition sequence. Verify low flow and stable flame signal are repeated.

Bypass Start Gas with High Turndown Option

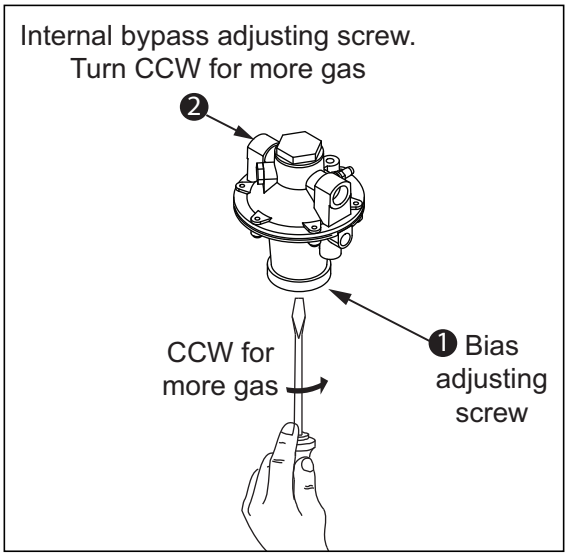

Figure 4.16. Ratio Regulator with Internal Bypass Adjusting Screw

1. Open all manual shut off valves.
2. Close internal bypass adjusting screw ❷ by turning it clockwise to closed position.
3. Set system control to stay at low fire during and after ignition sequence.
4. Ignite the burner.
5. If burner goes out due to main gas flame failure, turn bias adjusting screw ❶ a half turn clockwise to increase gas flow. Repeat ignition sequence until burner lights.
6. Slowly decrease gas flow with bias adjusting screw ❶. Decrease gas flow until the flame signal becomes erratic. (Refer to flame monitoring relay literature for a description of an erratic flame signal.)
7. If burner has gone out, repeat ignition sequence. Turn internal bypass adjusting screw ❷ a half turn counterclockwise to increase gas flow at each attempt until burner lights.
8. Flame signal strength, adjust gas flow with internal bypass adjusting screw ❷ for lowest gas flow that maintains a stable flame signal:
   - counterclockwise, for more fuel
   - clockwise, for less fuel
9. Verify low fire flame:
   a. Drive the control motor from low fire and back. Verify low fire and stable flame signal are repeated.
   b. Turn the burner off and repeat the ignition sequence. Verify low fire and stable flame signal are repeated.

Step 5: Verify Air Settings

NOTE: There are no high fire gas adjustments or air adjustments when firing into a neutral chamber. However, air and gas pressures can be used to verify the burner system is properly adjusted.

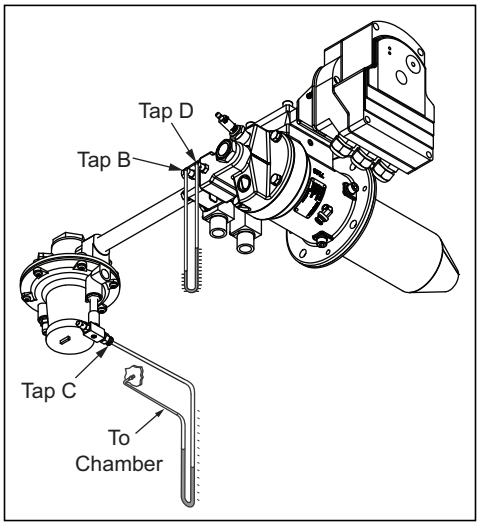

Figure 4.17. Setting Verification

1. With burner lit, drive control motor to high fire.
2. Wait for the chamber to reach normal operating conditions (e.g. chamber temperature, process flows, etc.).
3. Measure high fire fuel differential pressure between tap “B” and tap “D”. Compare this to the “Fuel Orifice ΔP vs. Input” graph on the datasheet.
4. Measure high fire air differential pressure between tap “C” and the chamber. Compare this pressure to the “Air ΔP vs. Air Flow” graph on the datasheet.
5. Drive the control motor to low fire and verify low fire flame signal and flame appearance (if viewing).

   NOTE: Gas pressure at low fire will be too low to measure and verify the fuel settings.
6. Cycle burner from high to low several times to check repeatability of settings.
7. Readjust burner if the settings do not repeat as expected. If necessary refer to Chapter 5, Maintenance & Troubleshooting.
8. Record all setup data as an aid for future troubleshooting and setup operations.
9. Stop the burner.

Maintenance and Troubleshooting

5

This section is divided into two parts. The first part describes the maintenance procedures, and the second part helps you to identify problems that may occur and gives advice on how to solve these problems.

Preventative maintenance is the key to a reliable, safe and efficient system. The following are suggested guidelines for periodic maintenance. Burners in severe environments or operational conditions should be checked more frequently.

NOTE: The monthly and yearly lists are an average interval. If your environment is dirty, then the intervals may be shorter. Check with local authorities having jurisdiction on their recommended maintenance schedules.

Monthly Checklist

1. Inspect flame-sensing devices for good condition and cleanliness.
2. Check for proper air/gas pressures (refer to the RatioAir Datasheets, Series 115).
3. Test all the system alarms for proper response signals.
4. Check and clean igniter electrodes.
5. Check the air control valve for smooth, trouble free operation and adjustment.
6. Check for the proper operation of ventilating equipment.
7. Test the interlock sequence on all safety equipment. Manually force each interlock to intentionally fail while at the same time noting if related equipment closes or stops as specified by the manufacturer. Test the flame safeguard by manually shutting off the gas to the burner.
8. Test the manual gas shut off cocks for proper operation.
9. Clean and/or replace the combustion air blower filter.
10. Inspect and clean the combustion air blower rotor.

Yearly Checklist

1. Test (leak test) safety shut-off valves for tightness of closure.
2. Test pressure switch settings by checking switch movements against pressure settings and comparing these with the actual impulse pressure.
3. Visually check ignition cable and connectors.
4. Inspect impulse piping for leaks.
5. Clean and inspect all burners.
6. Remove and clean the orifice plate ❺, see Figure 5.1.
7. Be sure the following components are not damaged or distorted:
   - the burner nozzle
   - the igniter
   - the flame sensors
   - the combustion tube or block

The nozzle and combustion tube/block can be inspected without removing the burner from the chamber wall or entering the chamber. See Figure 5.1. Perform the following:

a. Shut the burner off and manually close the main gas shut off cocks.
b. Allow the chamber temperature to cool down to 250°F (121°C).
c. Disconnect the gas piping at a union or the gas inlet flange ❶ provided on the burner.
d. Remove the rear cover bolts ❷.
e. Remove the rear cover ❸ from the burner housing ❹.
f. To re-assemble, follow this sequence in the reverse order.

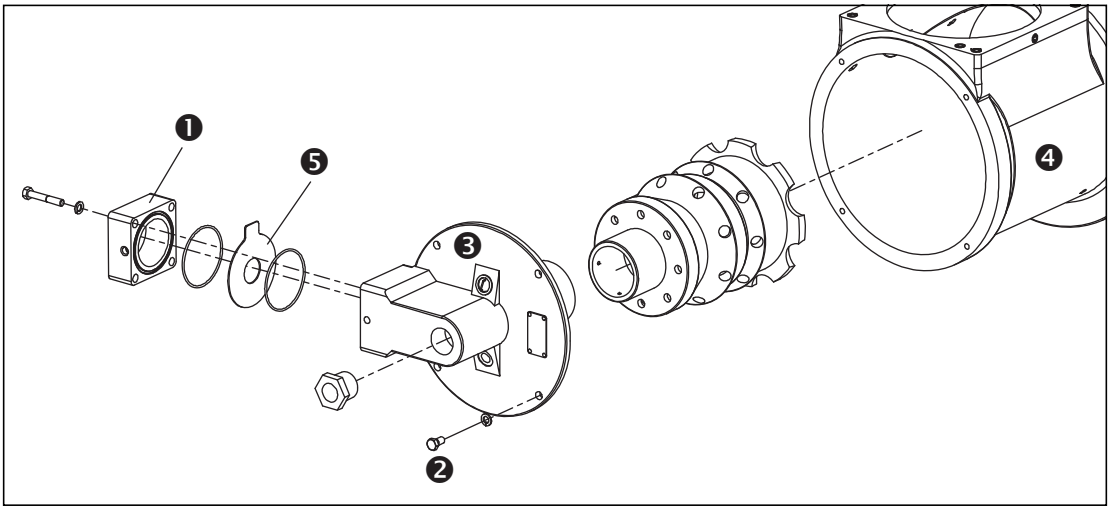

Figure 5.1.

Troubleshooting

Problem	Possible Cause	Solution
Start-up sequence runs but burner does not light.	No ignition: There is no power to the ignition transformer.	Restore the power to the ignition transformer.
	No ignition: Open circuit between the ignition transformer and the igniter.	Repair or replace the wiring of the igniter.
	No ignition: The igniter needs cleaning.	Clean the igniter.
	No ignition: The igniter is not correctly grounded to the burner.	Clean the threads on the igniter and the burner. **NOTE:** Do not apply grease to the threads on the igniter.
	No ignition: Igniter insulation is broken. Igniter is grounding out.	Inspect the igniter, replace if broken.
	Not enough gas: The gas pressure going into the ratio regulator is too low.	Check the start-up settings. Measure the gas pressures and adjust where necessary.
	Not enough gas: The impulse line to the ratio regulator is leaking.	Repair any leaks.
	Not enough gas: The pilot adjusting valve or bypass valve is not open far enough.	Adjust bypass or low fire gas.
	Not enough gas: Start gas solenoid valve does not open.	Check the solenoid valve coil for proper operation. Replace it if necessary.
	Not enough gas: Gas valve does not open.	Check the wiring to the automatic gas shut-off valve. Check the output from the flame safeguard. Open manual gas cock.
	Not enough gas: Ratio regulator is incorrectly set.	Adjust the ratio regulator to the proper setting.
	No flame signal: Broken flamerod or dirty UV scanner lens.	Inspect and clean sensor. Replace if necessary.
	No flame signal: Spark plug and flamerod reversed.	Exchange spark plug / flamerod or their wiring.
	Too much gas: Wrong or missing burner fuel orifice.	Check RatioAir Datasheets, Series 115 for fuel orifice and given fuel.

Problem	Possible Cause	Solution
The low fire flame is weak or unstable.	Not enough gas flowing to the burner.	Adjust the ratio regulator to increase the gas flow.
	Not enough air.	Check for proper blower rotation. Check air filter for blockage. Compensate for chamber by opening the low fire air butterfly valve position.
The burner goes out when it cycles to high fire.	Not enough gas pressure into the ratio regulator.	Check the start-up settings. Measure the gas pressures and adjust them where necessary. Check for valve train pressure loss.
	Loading line to the ratio regulator is leaking.	Repair the leak in the loading line.
The burner is erratic and does not respond to adjustment.	Internal damage to the burner: Some parts inside the burner are loose, dirty, or burned out.	Contact Eclipse for further information.
The burner is unstable or produces soot, smoke, or excessive carbon monoxide.	The air/gas ratio is out of adjustment.	Measure all the gas pressures and air pressures. Compare these pressures to the documented initial start-up settings and adjust them where necessary.
The burner cannot achieve full capacity.	Air filter is blocked.	Clean or replace the air filter.
	Gas pressure going into the ratio regulator is too low.	Adjust the gas pressure.
Cannot initiate a start sequence.	Air pressure switch has not made contact.	Check air pressure switch adjustment. Check air filter. Check blower rotation. Check outlet pressure from blower.
	High gas pressure switch has activated.	Check incoming gas pressure. Adjust gas pressure if necessary. Check pressure switch setting and operation.
	Low gas pressure switch has activated.	Check incoming gas pressure. Adjust gas pressure if necessary. Check pressure switch setting and operation.
	Malfunction of the flame safeguard system (e.g. shorted out flame sensor or electrical noise in the sensor line).	Have a qualified electrician troubleshoot and correct the problem.
	No power to the control unit.	Have a qualified electrician troubleshoot and correct the problem.
	Main power is off.	Be sure the main power to the system is switched to the “on” position.

Appendix

Conversion Factors

Metric to English

From	To	Multiply By
actual cubic meter/h (am³/h)	actual cubic foot/h (acfh)	35.31
normal cubic meter/h (Nm³/h)	standard cubic foot /h (scfh)	38.04
degrees Celsius (°C)	degrees Fahrenheit (°F)	(°C x 9/5) + 32
kilogram (kg)	pound (lb)	2.205
kilowatt (kW)	Btu/h	3415
meter (m)	foot (ft)	3.281
millibar (mbar)	inches water column ("w.c.)	0.402
millibar (mbar)	pounds/sq in (psi)	14.5×10^{-3}
millimeter (mm)	inch (in)	3.94×10^{-2}
MJ/Nm³	Btu/ft³ (standard)	26.86

Metric to Metric

From	To	Multiply By
kiloPascals (kPa)	millibar (mbar)	10
meter (m)	millimeter (mm)	1000
millibar (mbar)	kiloPascals (kPa)	0.1
millimeter (mm)	meter (m)	0.001

English to Metric

From	To	Multiply By
actual cubic foot/h (acfh)	actual cubic meter/h (am³/h)	2.832×10^{-2}
standard cubic foot /h (scfh)	normal cubic meter/h (Nm³/h)	2.629×10^{-2}
degrees Fahrenheit (°F)	degrees Celsius (°C)	(°F - 32) x 5/9
pound (lb)	kilogram (kg)	0.454
Btu/h	kilowatt (kW)	0.293×10^{-3}
foot (ft)	meter (m)	0.3048
inches water column ("w.c.)	millibar (mbar)	2.489
pounds/sq in (psi)	millibar (mbar)	68.95
inch (in)	millimeter (mm)	25.4
Btu/ft³ (standard)	MJ/Nm³	37.2×10^{-3}

System Schematics

Symbol	Appearance	Name	Remarks	Bulletin/ Info Guide
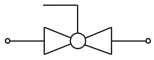	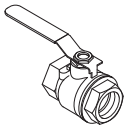	Gas Cock	Gas cocks are used to manually shut off the gas supply.	710
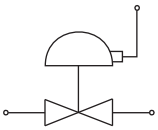	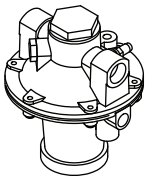	Ratio Regulator	A ratio regulator is used to control the air/gas ratio. The ratio regulator is a sealed unit that adjusts the gas pressure in ratio with the air pressure. To do this, it measures the air pressure with a pressure sensing line, the impulse line. This impulse line is connected between the top of the ratio regulator and the burner body.	
Main Gas Shut-Off Valve Train		Main Gas Shut-Off Valve Train	Eclipse strongly endorses NFPA as a minimum.	790/791
Pilot Gas Shut-Off Valve Train		Pilot Gas Valve Train	Eclipse strongly endorses NFPA as a minimum.	790/791
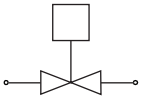	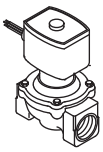	Automatic Shut-Off Valve	Shut-off valves are used to automatically shut off the gas supply on a gas system or a burner.	760
		Orifice Meter	Orifice meters are used to measure flow.	930
	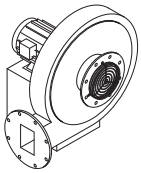	Combustion Air Blower	The combustion air blower provides the combustion air to the burner(s).	610

Symbol	Appearance	Name	Remarks	Bulletin/ Info Guide
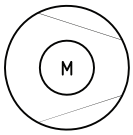	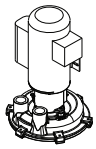	Hermetic Booster	Booster is used to increase gas pressure.	620
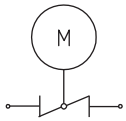	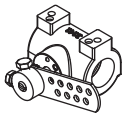	Automatic Butterfly Valve	Automatic butterfly valves are typically used to set the output of the system.	720
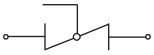	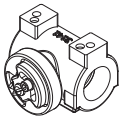	Manual Butterfly Valve	Manual butterfly valves are used to balance the air or gas flow at each burner.	720
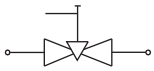	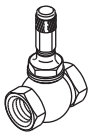	Adjustable Limiting Orifice	Adjustable limiting orifices are used for fine adjustment of gas flow.	728/730
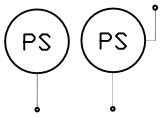		Pressure Switch	A switch activated by rise or fall in pressure. A manual reset version requires pushing a button to transfer the contacts when the pressure set point is satisfied.	840
		Pressure Gauge	A device to indicate pressure.	940
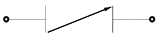		Check Valve	A check valve permits flow only in one direction and is used to prevent back flow of gas.	780
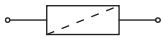	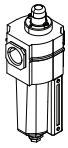	Strainer	A strainer traps sediment to prevent blockage of sensitive components downstream.	
		Flexible Connector	Flexible connectors isolate components from vibration, mechanical, and thermal stresses.	
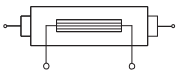	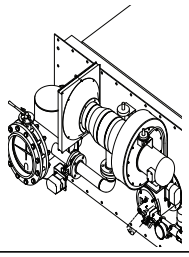	Heat Exchanger	Heat exchangers transfer heat from one medium to another.	500
		Pressure Taps	Pressure taps measure static pressure.	

© Eclipse, Inc. All Rights Reserved