Eclipse RatioAir Burners

Model RA0100

Data sheet Edition 09.15

Version 3

Parameter		Specifications		
		Packaged Blower Nominal (50Hz and 60Hz)		
Maximum Input, Btu/h (kW)[1, 2]	**Chamber Pressure "w.c. (mbar)**	**Straight Combustor**	**Medium Velocity Combustor**	**High Velocity Combustor**
	-2.0 (-5.0)	1,311,000 (384)	1,052,000 (308)	977,000 (286)
	-1.0 (-2.5)	1,216,000 (356)	982,000 (288)	935,000 (274)
	0.0 (0.0)	1,113,000 (326)	907,000 (266)	892,000 (261)
	1.0 (2.5)	1,000,000 (293)	825,000 (242)	846,000 (248)
	2.0 (5.0)	871,000 (255)	734,000 (215)	798,000 (234)
Minimum Input, Btu/h (kW) *For lower inputs, contact Eclipse, Inc.*		30,000 (8.8)	30,000 (8.8)	30,000 (8.8)
Main Gas Inlet Pressure, "w.c. (mbar)[3] *Fuel pressure at ratio regulator inlet*	Maximum	20 (50)	20 (50)	27 (67)
	Minimum	15 (37)	15 (37)	15 (37)
High Fire Visible Flame Length, inches (mm) *Measured from the outlet end of the combustor*		45 (1143)	38 (965)	33 (838)
Approximate Flame Velocity, ft/s (m/s) *Approximately 15% excess air at maximum input*		-	250 (75)	500 (150)
Maximum Chamber Temperature, °F (°C)	Alloy Combustor	1500 (820)	1750 (955)	1750 (955)
	SiC Combustor	1900 (1040)	2500 (1370)	2500 (1370)
	Block & Holder	-	2800 (1540)	2800 (1540)
Flame Detection		Flame rod or UV scanner available for all combustors*		
Blower Motor Power, Hp	60 Hz	6" w.c. @ 16,500 scfh, 1/2 hp	6" w.c. @ 16,500 scfh, 1/2 hp	10" w.c. @ 22,000 scfh, 1 hp
	50 Hz	4.2" w.c. @ 13,700 scfh, 0.37 kW	6" w.c. @ 16,500 scfh, 0.37 kW	10" w.c. @ 22,000 scfh, 0.75 kW
Weight, lbs (kg)[4]	Alloy Combustor	170 (77)		
	Block and Holder	231 (105)		
Fuels[5] *For any other mixed gas, contact Eclipse, Inc.*		Natural Gas, Propane or Butane		
Approvals		АИ30		

* Flamerod cannot be selected if gas is rotated 90° clockwise from air inlet.

[1] Maximum inputs for packaged blower versions are given for the standard combustion air blower without an inlet air filter.

[2] Blower motor service factors greater than 1.0 may be required when firing into negative chamber pressure applications. For specific application questions, contact Eclipse.

[3] For proper performance, this pressure must be kept constant across the burner operating range.

[4] All weights are approximate.

[5] See Design Guide 115 for more information about typical fuel composition and properties.

- All inputs based upon gross calorific values and standard conditions: 1 atmosphere, 70°F (21°C).
- Blower motor service factors greater than 1.0 may be required when firing into negative chamber pressure applications. For specific application questions, contact Eclipse.
- Eclipse reserves the right to change the construction and/or configuration of our products at any time without being obliged to adjust earlier supplies accordingly.
- All information is based on laboratory testing. Different chamber conditions will affect the data.

elster
Thermal Solutions

Control and Operation Curve

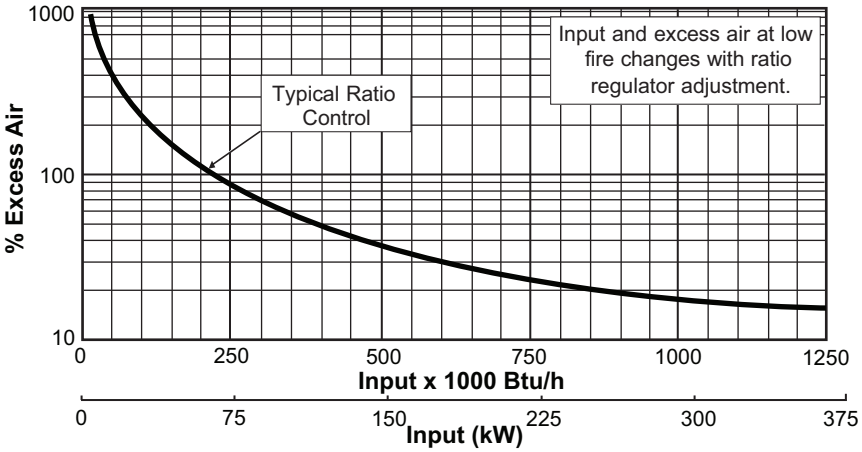

Straight Combustor Specifications

NO_x Emission (On ratio)

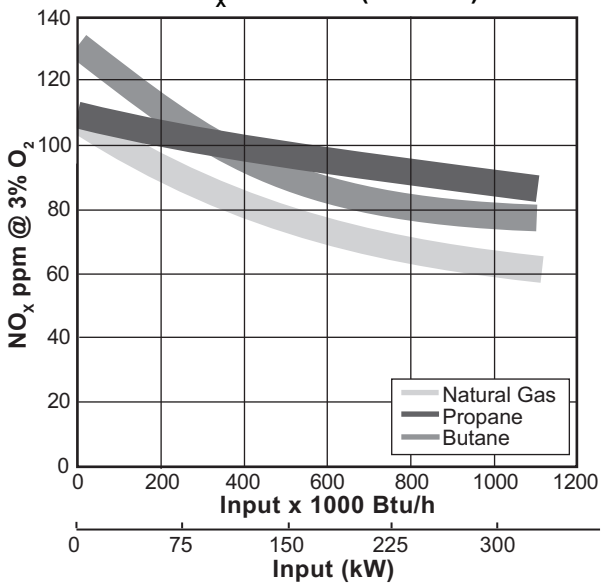

NO_x emission data is given for:

- Ambient combustion air ~70°F (21°C)
- Minimal process air velocity
- ppm volume dry at 3% O_2
- Neutral chamber pressure

Emissions from the burner are influenced by:

- Chamber conditions
- Fuel type
- Firing rate
- Ratio regulator adjustment
- Combustion air temperature

CO emission is largely influenced by chamber conditions. Contact your local Eclipse representative for an estimate of CO emission on your application.

Fuel Orifice Δp vs. Input

(Δp Measured Between Taps B and D)

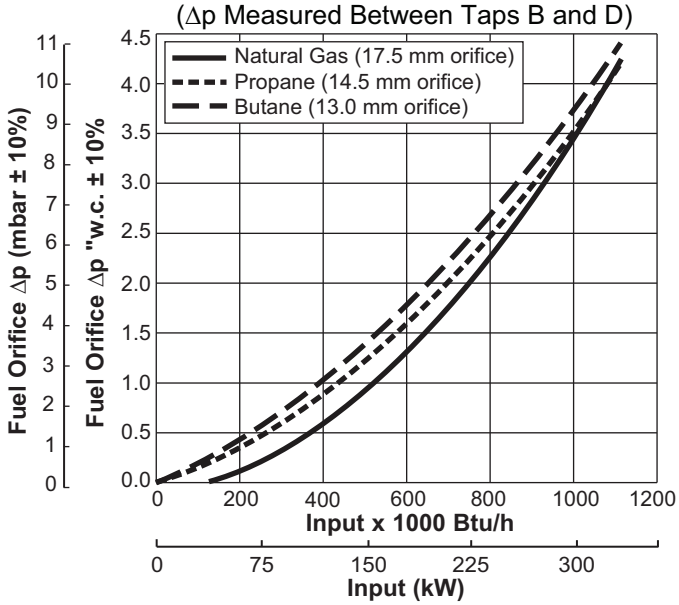

Air Δp vs. Input

(Δp Measured Between Tap C and the Chamber with the Burner Firing)

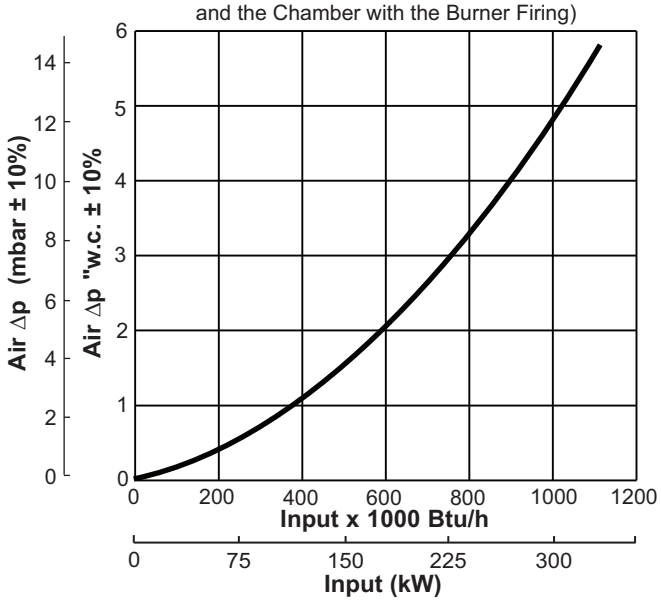

Medium Velocity Combustor Specifications

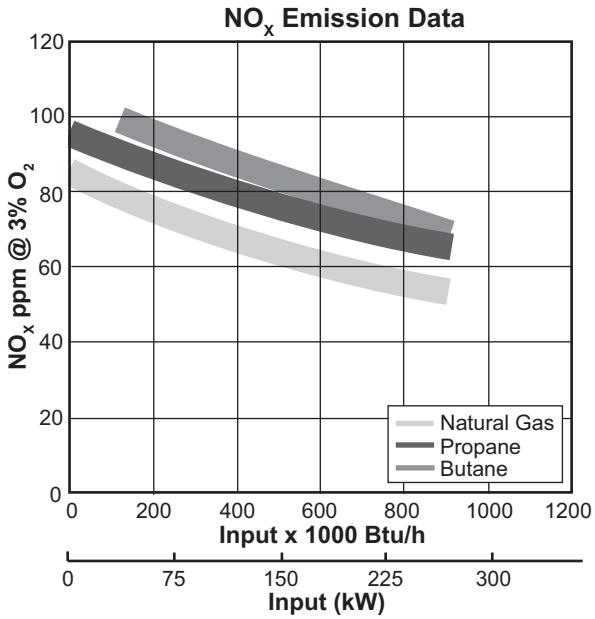

NO_x emission data is given for:

- Ambient combustion air ~70°F (21°C)
- Minimal process air velocity
- ppm volume dry at 3% O_2
- Neutral chamber pressure

Emissions from the burner are influenced by:

- Chamber conditions
- Fuel type
- Firing rate
- Ratio regulator adjustment
- Combustion air temperature

CO emission is largely influenced by chamber conditions. Contact your local Eclipse representative for an estimate of CO emission on your application.

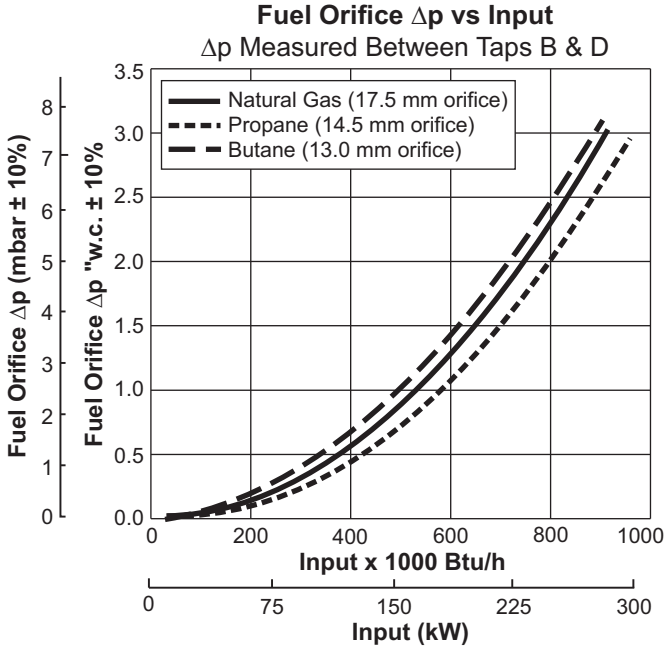

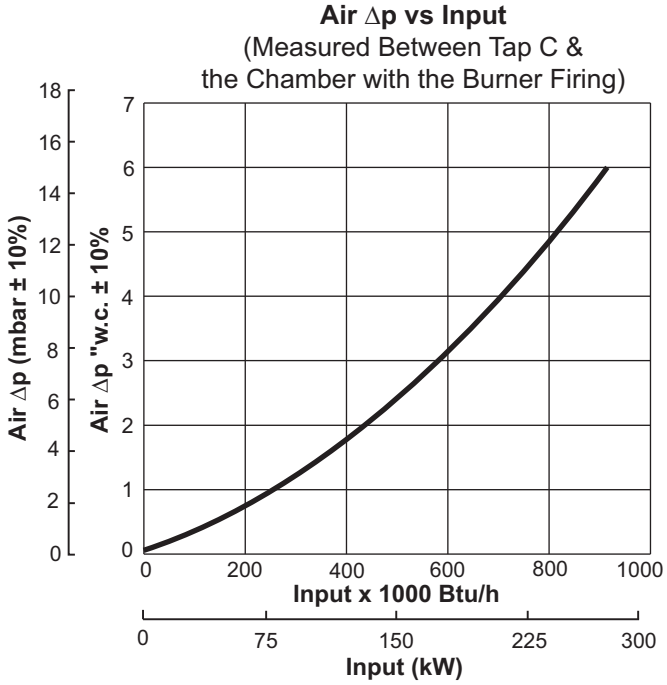

High Velocity Combustor Specifications

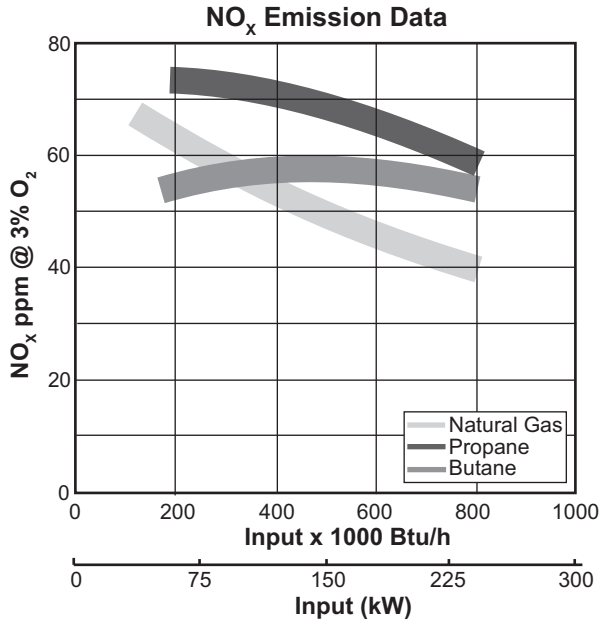

NO_x emission data is given for:

- Ambient combustion air ~70°F (21°C)
- Minimal process air velocity
- ppm volume dry at 3% O_2
- Neutral chamber pressure

Emissions from the burner are influenced by:

- Chamber conditions
- Fuel type
- Firing rate
- Ratio regulator adjustment
- Combustion air temperature

CO emission is largely influenced by chamber conditions. Contact your local Eclipse representative for an estimate of CO emission on your application.

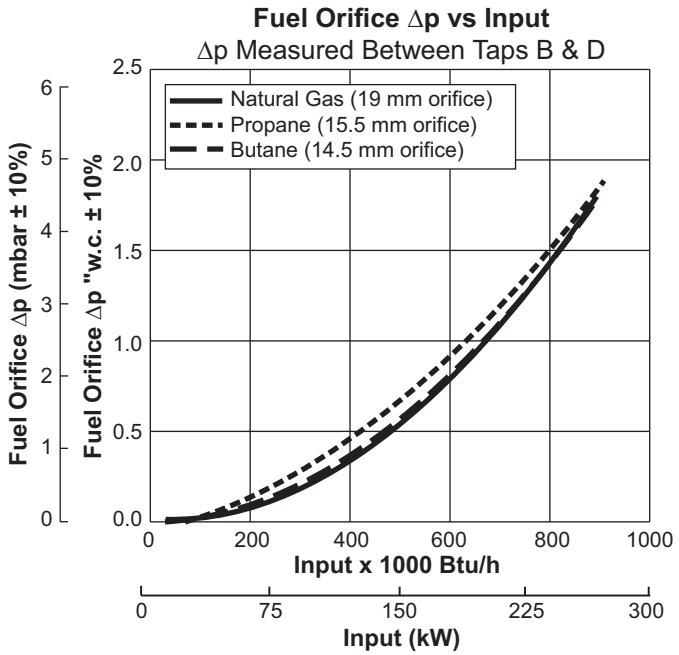

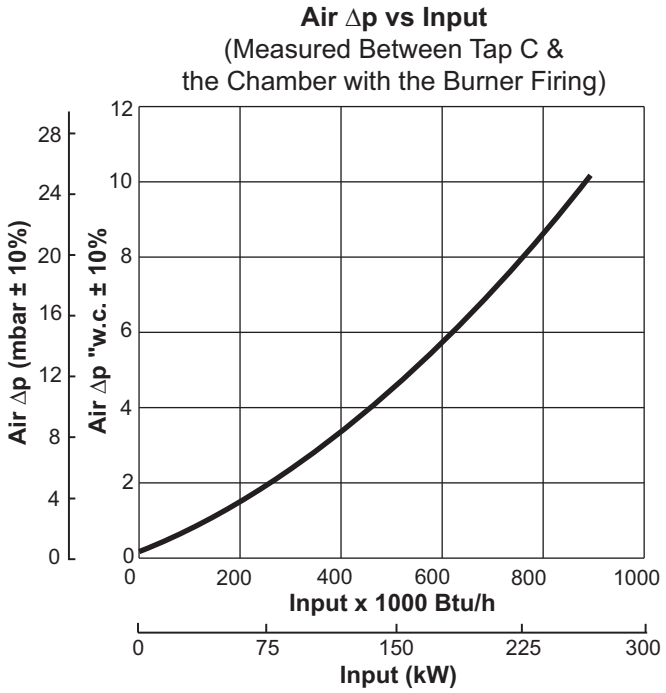

Dimensions and Specifications

Dimensions in mm (inches)

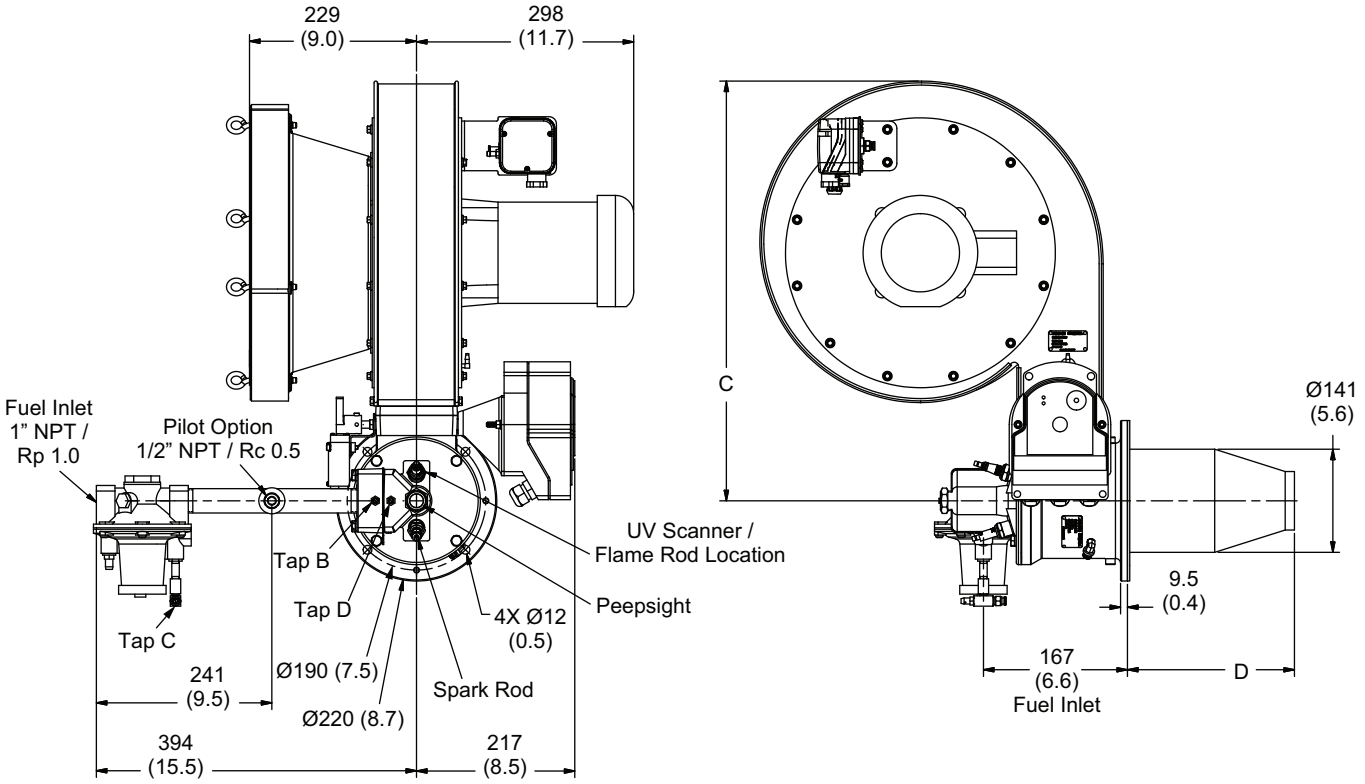

Blower	C
60 Hz (10" w.c.)	501 (19.7)
60 Hz (6" w.c.)	438 (17.2)
60 Hz (3" w.c.)	387 (15.2)
50 Hz (6" w.c.)	501 (19.7)
50 Hz (4.2" w.c.)	445 (17.5)

Combustor Type	D
Straight Alloy Tube	240 (9.4)
Straight Silicon Carbide Tube	230 (9.1)
Medium Velocity Alloy Tube	224 (8.8)
Medium Velocity Silicon Carbide Tube	230 (9.1)
High Velocity Alloy Tube	213 (8.4)
High Velocity Silicon Carbide Tube	230 (9.1)

Combustor Options

Straight Alloy Combustor

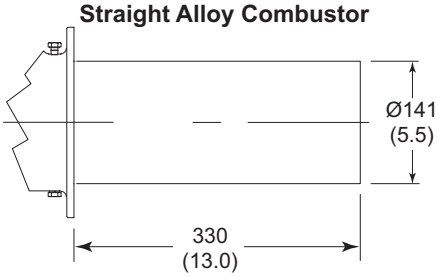

Medium & High Velocity Alloy Combustor

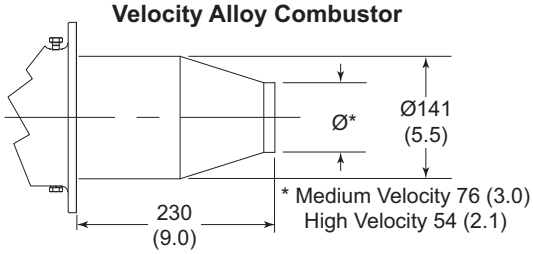

Mounting Pattern

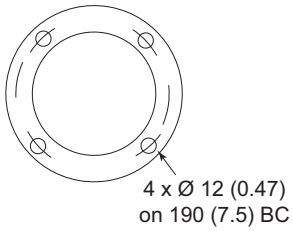

Straight SiC Combustor

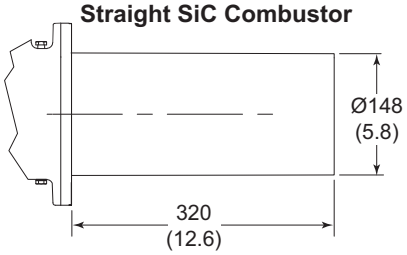

Medium & High Velocity SiC Combustor

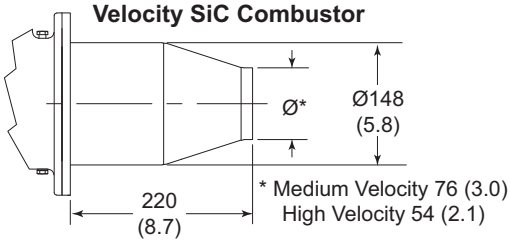

Mounting Pattern

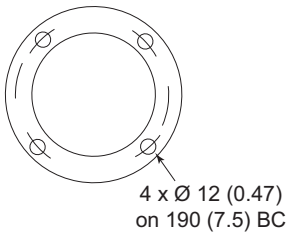

Block & Holder

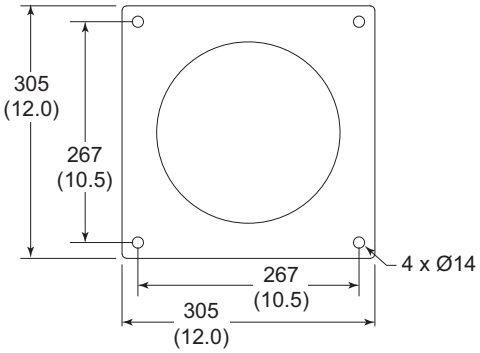

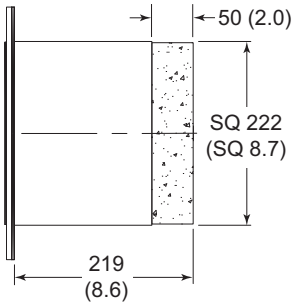

Burner Configurations

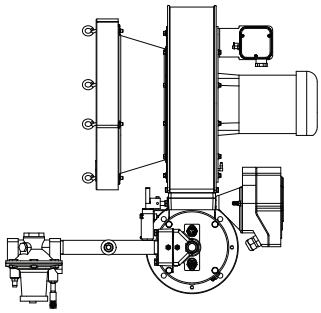

Upright
Left Hand Piping

Inverted
Left Hand Piping

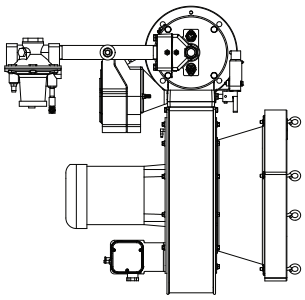

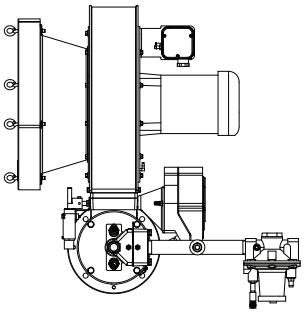

Upright
Right Hand Piping

Inverted
Right Hand Piping

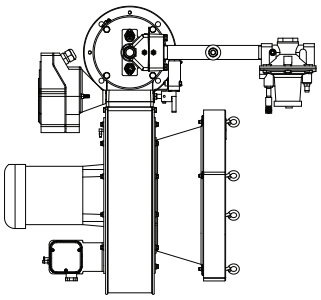

Even though the blower motor is on the "left" side of the inverted units, it is still a "right hand" motor in relationship to the blower assembly.

© Eclipse, Inc. All Rights Reserved