Manual Motor Protectors

Contents

Description	*Page*
Relays and Timers	**V5-T1-3**
Miniature Controls	**V5-T1-18**
Contactors and Starters	**V5-T1-35**
Thermal Overload Relays	**V5-T1-128**
C440/***XT*** Electronic Overload Relay	**V5-T1-141**
Manual Motor Protectors	
Features and Benefits	**V5-T1-158**
Standards and Certifications	**V5-T1-158**
Product Identification	**V5-T1-159**
Catalog Number Selection	**V5-T1-160**
Product Selection	**V5-T1-161**
Accessories	**V5-T1-164**
Technical Data and Specifications	**V5-T1-176**
Dimensions	**V5-T1-185**
Combination Motor Controllers	**V5-T1-193**
XT Electronic Manual Motor Protector	**V5-T1-216**
EMS—Electronic Motor Starter	**V5-T1-229**
Reference Data	**V5-T1-231**

Manual Motor Protectors

Product Description

Eaton's new ***XT*** family of manual motor protectors (MMPs) features a pushbutton or rotary ON/OFF manual disconnect, Class 10 adjustable bimetallic overload relay and fixed magnetic short-circuit trip capability in one compact unit. Two frame sizes are available: Frame B (45 mm) for motors with FLA ratings up to 32A and Frame D (55 mm) covers motor FLA ratings up to 65A.

Application Description

The XTPB and XTPR MMPs can be used in the following applications.

Motor Protective Circuit Breaker

In many countries outside of the United States and Canada, especially Europe, the MMPs are tested and classified as thermal-magnetic circuit breakers for use in motor branch circuits. This can be an important consideration for all companies who export their equipment and machines internationally. Both the XTPB and XTPR conform to IEC/EN 60947 and have the CE Mark.

Manual Motor Protectors

The XTPB and XTPR MMPs are UL listed under UL 508 as manual motor protectors. They provide an economical solution for applications requiring simple manual starting and stopping of motors. When used as a manual starter, they are typically installed in an enclosure. Many enclosures are offered as accessories for the MMPs. Separate short-circuit protective devices, such as circuit breakers or fuses, are wired ahead of the MMPs. The short-circuit protective device should be sized per the NEC and should not exceed 400% of the maximum FLA dial setting of the MMP.

Group Motor Installations

A group motor installation can be defined as more than one motor circuit protected by a single set of fuses or circuit breaker on a motor branch circuit. This eliminates the need for individual fuses or circuit breakers for each motor circuit. Substantial component cost savings, panel space savings and reduced wiring installation time can be achieved in group motor installations.

The MMPs are tested and listed for group installation. If remote operation is required, a magnetic contactor can be wired in series with the MMP.

Article 430.53 of the NEC contains the rules and requirements for group motor installations. Refer to application note AP03402001E for NEC requirement for group motor installation.

Individual Branch Motor Applications

A UL 508 Type E self-protected manual combination starter/motor controller consists of a single device possessing four essential elements: disconnect, short circuit protection, motor controller, and motor overload protection. Some MMPs require use of a lineside adapter for this type of approval. When tested as an official combination by UL, this device takes the place of a fuse-starter or breaker-starter, ***XT*** Type E MMPs are self-protected, meaning they do not need additional short circuit protection of a fuse or breaker. Type E devices can also be used with a contactor or other types of UL approved controllers. If tested with a contactor, the combination motor controller becomes a Type F device. See **Page V5-T1-199** for XTFC Type F devices.

Features and Benefits

- ON/OFF rotary handle with lockout provision
- Visible trip indication
- Class 10 overload protection
- Phase loss sensitivity
- Ambient temperature compensation to IEC/EN 60947, VDE 0660
- Fixed short-circuit trip—14 times maximum setting of overload FLA dial
- Type 2 coordination per IEC 947
- Identification markers standard on starter faceplate
- Motor applications from 0.1A to 65A
- Built-in heater and magnetic trip elements to protect the motor
- Adjustment dial for setting motor FLA
- DIN rail mount
- Terminal types available:
  - Screw terminals
  - Screw (line) and spring cage (load) terminals
  - Spring cage terminals
- Accessories include:
  - Front and side auxiliary contacts
  - Trip indicating contacts
  - Tamperproof cover for OLR dial
  - Undervoltage release
  - Shunt trip
  - Through-the-door operators
  - Enclosures
  - Three-phase line side connecting links

Standards and Certifications

- CE approved
- UL listed File No. E245398
- UL 508 group motor and Type E compliant
- IEC/EN 60947
- CSA File 229767, Class 3211-05
- DIN VDE 0660 Part 100, Part 101 and Part 102

Note: For Type 2 Coordination of MMCs, see **Page V5-T1-232**.

Line Side Adapters—When to Use Them

Note: Line side adapters are not required for non-US applications. Most countries outside of the US classify the MMP as a thermal magnetic circuit breaker.

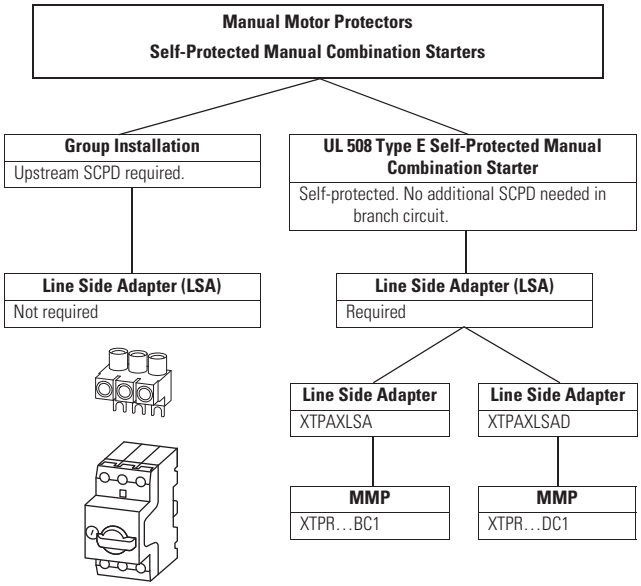

Manual Motor Protector and Line Side Adapter

Product Identification

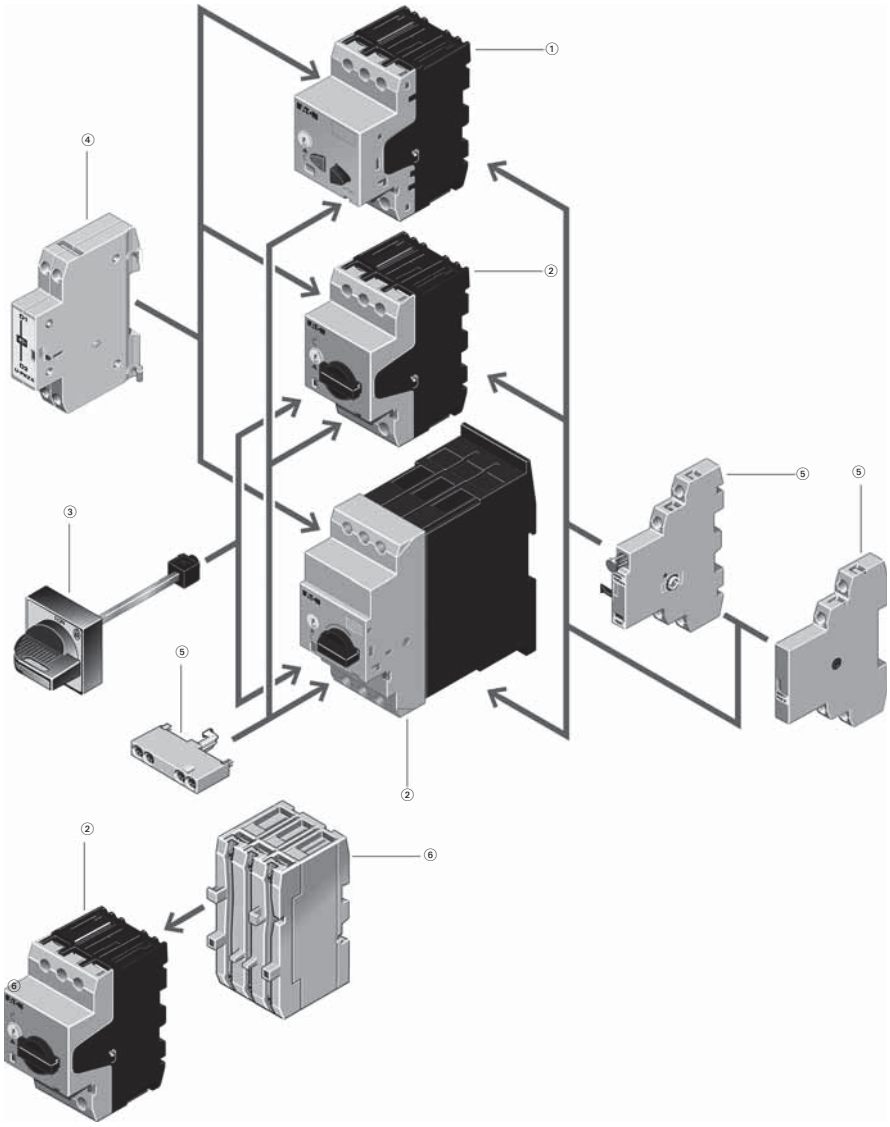

Notes

Basic Units

① XTPB pushbutton manual motor protectors (see **Page V5-T1-161**)
- Rated operational current up to 25A
- Switching capacity 50 kA/415V
- Short-circuit release, adjustable 0.6–1 x I_u
- Single-phasing sensitive

② XTPR rotary manual motor protectors (see **Page V5-T1-162**)
- Rated operational current up to 32A, 65A
- Switching capacity 150/50 kA/415V
- Short-circuit release, fixed setting to 14 x I_u
- Overload release, adjustable 0.6–1 x I_u
- Single-phasing sensitive
- With screws or spring-loaded terminals

Mounting Accessories

③ Rotary handle mechanism (see **Page V5-T1-167**)
- ON/OFF/tripped switch position indication
- Lockable door/cover interlock
- Extendable y plug fit extension shaft
- Handle latched in switch positions
- Optionally also without locking and door interlock function

Insulated enclosures (see **Page V5-T1-171**)
- Surface mounting, enclosures, IP40, IP55 and IP40 and IP55 front flush mounting enclosure

Mounting/wiring (see **Page V5-T1-167**)
- Component adapter for busbar mounting
- Three-phase commoning link for side-by-side-mounting
- Mounting kits for rapid mounting of direct-on-line, reversing and star-delta starters

Add-On Functions

④ Voltage releases (see **Page V5-T1-166**)
- Undervoltage release
- Shunt releases
- With screws or spring-loaded terminals

⑤ Standard auxiliary contacts (see **Page V5-T1-164**)
- ON/OFF indication
- Differential fault indication overload/short-circuit release
- ON/OFF for (high capacity) contact module
- ON/OFF for starter combination
- With early-make contacts
- With screws or spring-loaded terminals

⑥ Current limiter (see **Page V5-T1-166**)
- Increases the switching capacity of the 10–25A manual motor protectors to 100 kA/440V
- Can be used for individual group protection

1

Catalog Number Selection

XT Manual Motor Protectors

XT PR 012 B C1

Designation
XT = ***XT*** IEC power control

Type	
PB	= Manual motor protector—pushbutton
PR	= Manual motor protector—rotary

Current Ratings	
Frame B	**Frame D**
P16 = 0.16A	**016** = 16A
P25 = 0.25A	**025** = 25A
P40 = 0.40A	**032** = 32A
P63 = 0.63A	**040** = 40A
001 = 1A	**050** = 50A
1P6 = 1.6A	**058** = 58A
2P5 = 2.5A	**063** = 63A
004 = 4A	
6P3 = 6.3A	
010 = 10A	
012 = 12A	
016 = 16A	
020 = 20A	
025 = 25A	
032 = 32A	

Frame Size	
B	= 45 mm
D	= 55 mm

Trip Class
C1 = Class 10

Product Selection

Product Selection for Manual Motor Starter Applications

When ordering, specify catalog numbers according to the following stipulations:

XT manual motor protectors are selected based on the overload current range required for a given motor. This current range is determined from the motor full load ampere rating and motor service factor usually found on the motor nameplate.

For motors with service factors less than 1.15, multiply the motor FLA by 0.90 to select appropriate MMP.

Example: For motor having FLA of 6.4A and service factor of 1.0 (6.4A x 0.90 = 5.76A) select catalog number XTPB6P3B01.

See Application Note—AP03402001E.

For motor with service factor of 1.15 or greater, use motor nameplate full load amperes to select the appropriate MMP.

Example: For motor having FLA of 11A and service factor of 1.15, select catalog number XTPR012BC1.

Frame B

XTPB Pushbutton Manual Motor Protectors—Global and North American Ratings—Frame B

Type 1 and Type 2 Coordination Motor Protective Device with Thermal and Magnetic Trip

Rated Uninterrupted Current—$I_u = I_e$ (Amps)	FLA Adjustment Range/ Overload Release—I_r (Amps)	Short Circuit Release—I_{rm} (Amps)	Maximum Motor Ratings ① Maximum kW Rating AC-3—P (kW) Three-Phase					Maximum hp Rating—P (hp) UL 508/CSA C22.2 No. 14 Three-Phase				Screw Terminal Catalog Number
			220–240V	380–415V	440V	500V	660–690V	200V	240V	480V	600V	
0.16	0.1–0.16	2.2	—	—	—	—	0.06	②	②	②	②	**XTPBP16BC1**
0.25	0.16–0.25	3.5	—	0.06	0.06	0.06	0.12	②	②	②	②	**XTPBP25BC1**
0.4	0.25–0.4	5.6	0.06	0.09	0.12	0.12	0.18	②	②	②	②	**XTPBP40BC1**
0.63	0.4–0.63	8.8	0.09	0.12	0.18	0.25	0.25	②	②	②	②	**XTPBP63BC1**
1	0.63–1	14	0.12	0.25	0.25	0.37	0.55	②	②	2	1/2	**XTPB001BC1**
1.6	1–1.6	22	0.25	0.55	0.55	0.75	1.1	②	②	3/4	3/4	**XTPB1P6BC1**
2.5	1.6–2.5	35	0.37	0.75	1.1	1.1	1.5	1/2	1/2	1	1-1/2	**XTPB2P5BC1**
4	2.5–4	56	0.75	1.5	1.5	2.2	3	3/4	3/4	2	3	**XTPB004BC1**
6.3	4–6.3	88	1.1	2.2	3	3	4	1	1-1/2	3	5	**XTPB6P3BC1**
10	6.3–10	140	2.2	4	4	4	7.5	3	3	7-1/2	10	**XTPB010BC1**
12	8–12	168	3	5.5	5.5	5.5	11	3	3	7-1/2	10	**XTPB012BC1**
16	10–16	224	4	7.5	9	9	12.5	3	5	10	10	**XTPB016BC1**
20	16–20	280	5.5	9	11	12.5	15	5	—	—	15	**XTPB020BC1**
25	20–25	350	5.5	12.5	12.5	15	22	—	7-1/2	15	20	**XTPB025BC1**

Notes

Single-phasing sensitivity to IEC/EN 60947-4-1, VDE 0660 Part 102.

Can be snap-fit to IEC/EN 60715 top-hat (DIN) with 7.5 or 15 mm height.

Service Factor (SF)—Setting I_r of current scale in dependence of load factor:

$SF = 1.15 \rightarrow I_r = 1 \times I_{n\ mot}$

$SF = 1 \rightarrow I_r = 0.9 \times I_{n\ mot}$

For manual motor protective circuit breaker switching capacity, see **Page V5-T1-181**.

① Select manual motor protectors by full load amperes. Maximum motor ratings (kW, hp) are for reference only.

② In this range, calculate motor rating according to rated current. Specified values to NEC 430.6(A)(1).

Frame B

XTPR Rotary Manual Motor Protectors with Screw Terminals—Global Ratings and North American Ratings—Frame B

Type 1 and Type 2 Coordination Motor Protective Device with Thermal and Magnetic Trip

Rated Uninterrupted Current— $I_u = I_e$ (Amps)	FLA Adjustment Range/ Overload Release— I_r (Amps)	Short Circuit Release— I_{rm} (Amps)	Maximum Motor Ratings ① Maximum kW Rating AC-3—P (kW) Three-Phase 220–240V	380–415V	440V	500V	660–690V	Maximum hp Rating—P (hp) UL 508/CSA C22.2 No. 14 Three-Phase 200V	240V	480V	600V	Screw Terminal Catalog Number
0.16	0.1–0.16	2.2	—	—	—	—	0.06	②	②	②	②	**XTPRP16BC1**
0.25	0.16–0.25	3.5	—	0.06	0.06	0.06	0.12	②	②	②	②	**XTPRP25BC1**
0.4	0.25–0.4	5.6	0.06	0.09	0.12	0.12	0.18	②	②	②	②	**XTPRP40BC1**
0.63	0.4–0.63	8.8	0.09	0.12	0.18	0.25	0.25	②	②	②	②	**XTPRP63BC1**
1	0.63–1	14	0.12	0.25	0.25	0.37	0.55	②	②	②	②	**XTPR001BC1**
1.6	1–1.6	22	0.25	0.55	0.55	0.75	1.1	②	②	3/4	3/4	**XTPR1P6BC1**
2.5	1.6–2.5	35	0.37	0.75	1.1	1.1	1.5	1/2	1/2	1	1-1/2	**XTPR2P5BC1**
4	2.5–4	56	0.75	1.5	1.5	2.2	3	3/4	3/4	2	3	**XTPR004BC1**
6.3	4–6.3	88	1.1	2.2	3	3	4	1	1-1/2	3	5	**XTPR6P3BC1**
10	6.3–10	140	2.2	4	4	4	7.5	3	3	7-1/2	10	**XTPR010BC1**
12	8–12	168	3	5.5	5.5	5.5	11	3	3	7-1/2	10	**XTPR012BC1**
16	10–16	224	4	7.5	9	9	12.5	3	5	10	10	**XTPR016BC1**
20	16–20	280	5.5	9	11	12.5	15	5	—	—	15	**XTPR020BC1**
25	20–25	350	5.5	12.5	12.5	15	22	—	7-1/2	15	20	**XTPR025BC1**
32	25–32	448	7.5	15	15	22	30	7-1/2	10	20	25	**XTPR032BC1**

Frame D

XTPR Rotary Manual Motor Protectors with Screw Terminals—Global Ratings and North American Ratings—Frame D

Type 1 and Type 2 Coordination Motor Protective Device with Thermal and Magnetic Trip

Rated Uninterrupted Current— $I_u = I_e$ (Amps)	FLA Adjustment Range/ Overload Release— I_r (Amps)	Short Circuit Release— I_{rm} (Amps)	Maximum Motor Ratings ① Maximum kW Rating AC-3—P (kW) Three-Phase 220–240V	380–415V	440V	500V	660–690V	Maximum hp Rating—P (hp) UL 508/CSA C22.2 No. 14 Three-Phase 200V	240V	480V	600V	Screw Terminal Catalog Number
16	10–16	224	4	7.5	9	9	12.5	3	5	10	15	**XTPR016DC1**
25	16–25	350	5.5	12.5	12.5	15	22	7-1/2	7-1/2	15	20	**XTPR025DC1**
32	25–32	448	7.5	15	17.5	22	22	10	10	20	30	**XTPR032DC1**
40	32–40	560	11	20	22	24	30	10	15	30	30	**XTPR040DC1**
50	40–50	700	14	25	30	30	45	10	15	30	40	**XTPR050DC1**
58	50–58	812	17	30	37	37	55	15	15	40	50	**XTPR058DC1**
65	55–65	882	18.5	34	37	45	55	15	15	40	50	**XTPR063DC1**

Notes

Single-phasing sensitivity to IEC/EN 60947-4-1, VDE 0660 Part 102.

Can be snap-fit to IEC/EN 60715 top-hat (DIN) with 7.5 or 15 mm height.

Service Factor (SF)—Setting I_r of current scale in dependence of load factor:

$SF = 1.15 \rightarrow I_r = 1 \times I_{n\ mot}$

$SF = 1 \rightarrow I_r = 0.9 \times I_{n\ mot}$

For manual motor protective circuit breaker switching capacity, see **Page V5-T1-181**.

① Select manual motor protectors by full load amperes. Maximum motor ratings (kW, hp) are for reference only.

② In this range, calculate motor rating according to rated current. Specified values to NEC 430.6(A)(1).

Frame B

XTPR Manual Self-Protected Motor Starters—North American Ratings, UL 508 Type E—Frame B ①

Motor Protective Device with Thermal and Magnetic Trip

Rated Uninterrupted Current—I_u (Amps)	FLA Adjustment Range/ Overload Release—I_r (Amps)	Short Circuit Release—I_{rm} (Amps)	Maximum Motor Ratings ② Maximum hp Rating—P (hp) Three-Phase				Rated Short-Circuit Breaking Capacity (kA)		Line Side Adapter ① Catalog Number	Manual Motor Protector—Screw Terminal Catalog Number
			200V	240V	480V/ 277V	600V/ 247V	480/ 277V	600/ 347V		
0.16	0.1–0.16	2.2	③	③	1/2	1/2	50	50	**XTPAXLSA**	**XTPRP16BC1**
0.25	0.16–0.25	3.4	③	③	1/2	1/2	50	50	**XTPAXLSA**	**XTPRP25BC1**
0.4	0.25–0.4	5.6	③	③	1/2	1/2	50	50	**XTPAXLSA**	**XTPRP40BC1**
0.63	0.4–0.63	8.8	③	③	1/2	1/2	50	50	**XTPAXLSA**	**XTPRP63BC1**
1	0.63–1	14	③	③	1/2	1/2	50	50	**XTPAXLSA**	**XTPR001BC1**
1.6	1–1.6	22	③	③	3/4	3/4	50	50	**XTPAXLSA**	**XTPR1P6BC1**
2.5	1.6–2.5	35	1/2	1/2	1	1-1/2	50	50	**XTPAXLSA**	**XTPR2P5BC1**
4	2.5–4	56	3/4	1	2	3	50	50	**XTPAXLSA**	**XTPR004BC1**
6.3	4–6.3	88	1	1-1/2	3	5	65	50	**XTPAXLSA**	**XTPR6P3BC1**
10	6.3–11	140	3	3	7-1/2	10	65	50	**XTPAXLSA**	**XTPR010BC1**
12	8–12	168	3	3	7-1/2	—	65	—	**XTPAXLSA**	**XTPR012BC1**
16	10–16	224	3	5	10	—	42	—	**XTPAXLSA**	**XTPR016BC1**
20	16–20	280	5	5	—	—	18	—	**XTPAXLSA**	**XTPR020BC1**
25	20–25	350	5	7-1/2	15	—	18	—	**XTPAXLSA**	**XTPR025BC1**
32	25–32	448	7-1/2	10	25	—	18	—	**XTPAXLSA**	**XTPR032BC1**

Frame D

XTPR Manual Self-Protected Motor Starters—North American Ratings, UL 508 Type E—Frame D ①

Motor Protective Device with Thermal and Magnetic Trip

Rated Uninterrupted Current—I_u (Amps)	FLA Adjustment Range/ Overload Release—I_r (Amps)	Short Circuit Release—I_{rm} (Amps)	Maximum Motor Ratings ② Maximum hp Rating—P (hp) Three-Phase				Rated Short-Circuit Breaking Capacity (kA)			Line Side Adapter ① Catalog Number	Manual Motor Protector—Screw Terminal Catalog Number
			200V	240V	480V/ 277V	600V/ 247V	240V	480/ 277V	600/ 347V		
16	10–16	224	3	5	10	10	65	65	25	**XTPAXLSAD**	**XTPR016DC1**
25	16–25	350	7-1/2	7-1/2	20	25	65	65	25	**XTPAXLSAD**	**XTPR025DC1**
32	25–32	448	10	10	25	30	65	65	25	**XTPAXLSAD**	**XTPR032DC1**
40	32–40	560	10	—	30	30	65	65	25	**XTPAXLSAD**	**XTPR040DC1**
50	40–50	700	—	15	30	—	65	65	—	**XTPAXLSAD**	**XTPR050DC1**
58	50–58	812	—	—	40	—	65	65	—	**XTPAXLSAD**	**XTPR058DC1**
65	55–65	882	—	—	40	—	65	65	—	**XTPAXLSAD**	**XTPR063DC1**

Notes

A UL 508 Type E self-protected manual combination starter (XTPR) consists of a manual motor protector (XTPR) and a UL Listed line side adapter (for example, XTPAXLSA). The Type E self-protected manual combination starter alone is a legitimate short-circuit protective device and disconnect means for the downstream motor, while the contactor has been added to provide remote operation of the motor circuit. Conductor size for XTPAXLSA is 14–6 AWG, XTPAXLSAD is 8 AWG–1/0.

① UL 508 Type E starters are assembled from a standard XTPR and a special incoming terminal line side adapter (XTPAXLSA or XTPAXLSAD).

② Select manual motor protectors by full load amperes. Maximum motor ratings (kW, hp) are for reference only.

③ In this range, calculate motor rating according to rated current. Specified values to NEC 430.6(A)(1).

1

Accessories

Auxiliary Contacts

XTPAXSA_

Side-Mount Auxiliary Contacts

Contact Configuration	Contact Sequence	Pkg. Qty. ①	Screw Terminal Catalog Number
1NO-1NC	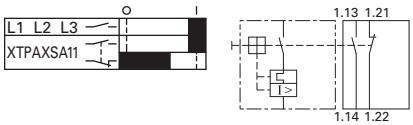	5	**XTPAXSA11**
1NO-2NC	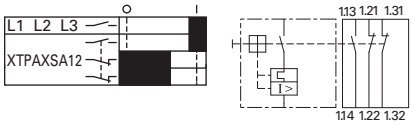	5	**XTPAXSA12**
2NO-1NC	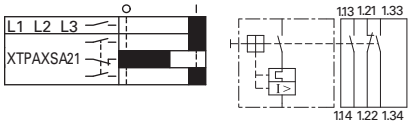	5	**XTPAXSA21**

Can be fitted on the right side of manual motor protectors (XTPB, XTPR, XTPM) and manual transformer protectors (XTPT) and can be combined with XTPAXSATR_ and XTPAXFA_ trip indicating auxiliary contact.

XTPAXFA11

Front-Mount Auxiliary Contacts

Contact Configuration	Contact Sequence	Pkg. Qty. ①	Screw Terminal Catalog Number
1NO-1NC	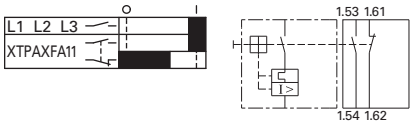	5	**XTPAXFA11**

Can be fitted to manual motor protectors (XTPB, XTPR, XTPM) and manual transformer protectors (XTPT). 45 mm (XTPR…B and XTPB) or 55 mm (XTPR…D) widths of manual motor protectors remain unchanged.

Note

① Orders must be placed in multiples of package quantity listed.

XTPAXSATR_

Side-Mount Trip Indicating Auxiliary Contacts

Contact Configuration	Contact Sequence	Pkg. Qty. ①	For Use with…	Catalog Number
2 x 1NO	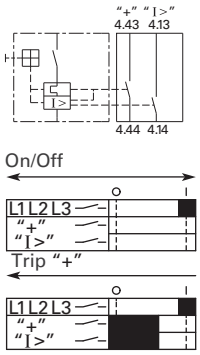	2	XTPB, XTPR, XTPM, XTPT	**XTPAXSATR20**
2 x 1NC	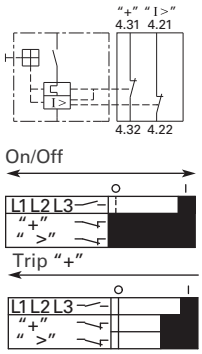	2	XTPB, XTPR, XTPM, XTPT	**XTPAXSATR02**

Can be fitted on the right side of manual motor protectors. Can be combined with standard auxiliary contacts. Trip indication: A. General trip indication (overload) B. Short-circuit trip. Local short-circuit indication by red indicator, manually resettable.

Early-Make Front-Mount Auxiliary Contacts

	Contact Configuration	Contact Sequence	Pkg. Qty. ①	For Use with…	Catalog Number
XTPBXFAEM20	2NO	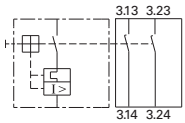	5	XTPB	**XTPBXFAEM20**
XTPAXFAEM20	2NO		2	XTPR, XTPM, XTPT	**XTPAXFAEM20** ②

For use with XTPB_, Frame B XTPR and XTPT. Can be fitted to the front of a manual motor protector. 45 mm width of manual motor protector remains unchanged. For early energization of undervoltage release, for example, in emergency-stop circuits to EN 60204.

Notes

① Orders must be placed in multiples of package quantity listed.

② Not for use with rotary handle mechanism.

Additional Accessories

XTPAXSR_

Contact Sequence

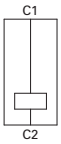

Shunt Release

Pkg. Qty. ①	Screw Terminal Catalog Number
2	**XTPAXSR24V50H**
2	**XTPAXSR48V50H**
2	**XTPAXSR110V50H**
2	**XTPAXSR120V60H**
2	**XTPAXSR208V60H**
2	**XTPAXSR220V50H**
2	**XTPAXSR230V50H**
2	**XTPAXSR240V50H**
2	**XTPAXSR240V60H**
2	**XTPAXSR380V50H**
2	**XTPAXSR400V50H**
2	**XTPAXSR415V50H**
2	**XTPAXSR440V60H**
2	**XTPAXSR480V60H**
2	**XTPAXSR24VDC**
2	**XTPAXSR48VDC**
2	**XTPAXSR60VDC**
2	**XTPAXSR110VDC**
2	**XTPAXSR125VDC**
2	**XTPAXSR220VDC**
2	**XTPAXSR250VDC**

Can be used to trip the manual motor protector from a remote location. Can be fitted on the left side of manual motor protectors. Cannot be combined with the XTPAXUVR. DC: Intermittent operation 5 sec.

XTPAXUVR_

Contact Sequence

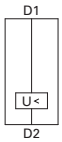

Undervoltage Release

Pkg. Qty. ①	Screw Terminal Catalog Number
2	**XTPAXUVR24V50H**
2	**XTPAXUVR24V60H**
2	**XTPAXUVR48V50H**
2	**XTPAXUVR60V50H**
2	**XTPAXUVR110V50H**
2	**XTPAXUVR120V60H**
2	**XTPAXUVR208V60H**
2	**XTPAXUVR220V50H**
2	**XTPAXUVR230V50H**
2	**XTPAXUVR240V50H**
2	**XTPAXUVR240V60H**
2	**XTPAXUVR380V50H**
2	**XTPAXUVR400V50H**
2	**XTPAXUVR415V50H**
2	**XTPAXUVR440V60H**
2	**XTPAXUVR480V60H**
2	**XTPAXUVR600V60H**

Can be used to trip the manual motor protector from a remote location. Can be fitted on left side manual motor protectors. Cannot be combined with XTPAXSR. When combined with a circuit breaker, it can be used as emergency-stop device to IEC/EN 60204.

XTPAXCL

Current Limiter ②

Description	Contact Sequence	Pkg. Qty. ①	Catalog Number
To enhance the switching capacity of non-inherently safe 10–25A manual motor protectors to 150 kA/440V	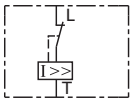	1	**XTPAXCL**

The XTPAXCL enhances the switching capacity of the XT manual motor protectors. It can be used with the XTPB, XTPR…BC1, XTPR…DC1 for individual or group protections. The rated uninterrupted current is 63A for IEC and 25A for UL/CSA. It can be mounted next to or behind the manual motor protector. See **Page V5-T1-181** for ratings when using the current limiter.

Notes

① Orders must be placed in multiples of package quantity listed.

② Max. rated operation voltage U_e = 690V, rated uninterrupted current I_u = 63A. Can be used for individual and group protection. For group protection and in combination with the XTPR…D order additional XTPAXIT incoming terminal if required. Mounting next to or behind the manual motor protector. 16–63A XTPR…D: 100 kA/400V, 10 kA/690V.

IP65 Rotary Handle Mechanism ①②③④

XTPAXRHM_

XTPAXRHMSFT

Description	Enclosure Rating	Pkg. Qty. ⑤	Catalog Number
Complete Kits—Includes Handle, Shaft and Required Hardware			
Rotary handle mechanism—black ⑥	IP65 NEMA 12 UL/CSA 4X	1	**XTPAXRHMB**
Rotary handle mechanism—red/yellow ⑦		1	**XTPAXRHMRY**
Rotary handle mechanism—black—rotated 90° from vertical ⑥		1	**XTPAXRHM90B**
Rotary handle mechanism—red/yellow—rotated 90° from vertical ⑦		1	**XTPAXRHM90RY**
Separate Parts			
Shaft only—includes shaft to mount to XTPR, 175 mm length	—	10	**XTPAXRHMSFT**

XTPAXSW

Sealing Facility

Description	Pkg. Qty. ⑤	Catalog Number
To prevent tampering with the overload release and the test function. It can be sealed using industry standard sealing wire. For use with XTPR manual motor protectors.	5	**XTPAXSW**

Three-Phase Commoning Links ⑧

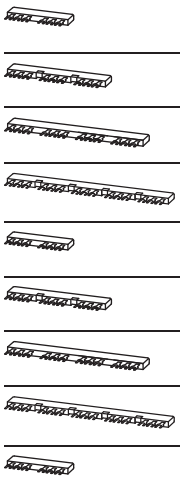

For Use with…	Qty. MMP	MMP Frame Size	Pkg. Qty. ⑤	Catalog Number
MMP with no side-mounted auxiliaries or voltage releases	2	B	10	**XTPAXCLKA2**
		D	1	**XTPAXCLKA2D**
	3	B	10	**XTPAXCLKA3**
		D	1	**XTPAXCLKA3D**
	4	B	10	**XTPAXCLKA4**
		D	1	**XTPAXCLKA4D**
	5	B	10	**XTPAXCLKA5**
Each MMP with one auxiliary contact or trip-indicating auxiliary contact fitted on the right	2	B	10	**XTPAXCLKB2**
		D	1	**XTPAXCLKB2D**
	3	B	10	**XTPAXCLKB3**
		D	1	**XTPAXCLKB3D**
	4	B	10	**XTPAXCLKB4**
		D	1	**XTPAXCLKB4D**
	5	B	10	**XTPAXCLKB5**
Each MMP with an auxiliary contact and trip-indicating auxiliary contact mounted on the right or a voltage release mounted on the left.	2	B	10	**XTPAXCLKC2**
	4	D	1	**XTPAXCLKC4D**

For parallel power feed to several manual motor protectors on terminals 1, 3 and 5.

Notes

① Plug-in connection shafts, XTPAXRHMSFT_ can be cut to desired length for mounting depths of 100–240 mm. Carrier with extension shaft included.
② With ON/OFF switch position and "+" (tripped), lockable with 3 padlocks, 4–8 mm hasp. Can be locked in the OFF position, if required.
③ Rotary handle mechanisms ship with door interlock disabled. See instruction publication with product for how to enable door interlock.
④ Not for use with XTPAXFAEM20 early-make front-mount auxiliary contact.
⑤ Orders must be placed in multiples of package quantity listed.
⑥ For use on main switches to IEC/EN 60204.
⑦ For use on main switches with emergency-stop function to IEC/EN 60204.
⑧ Protected against accidental contact. Frame B short-circuit proof U_e = 690V, I_u = 63A. Frame B links can be combined by rotating mounting.

XTPAXUTS

Shroud for Unused Terminals of Three-Phase Commoning Links

For Use with…	Description	Pkg. Qty. ①	Catalog Number
Frame B XTPR	To cover unused terminals on three-phase commoning link. Protected against direct contact.	20	**XTPAXUTS**

XTPAXIT

Incoming Terminals for Three-Phase Commoning Link ②

For Use with…	Pkg. Qty. ①	Catalog Number
Frame B XTPR, XTPB	5	**XTPAXIT**

Line-Side Adapter ③

XTPAXLSA

For Use with…	Pkg. Qty. ①	Catalog Number
Frame B XTPR to create a UL 508 Type E/F manual combination starter	5	**XTPAXLSA**

XTPAXLSAD

Frame D XTPR to create a UL 508 Type E/F manual combination starter	1	**XTPAXLSAD** ④

Combination Connection Kits

Non-Reversing Starters

	For Use with…	Description/Comprised of …	Std. Pack ①	Catalog Number
XTPAXTPCB 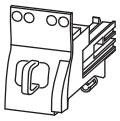	XTPR…B + XTCE…B	Mechanical connection element for XTPR…B and contactor	1	**XTPAXTPCB**
		Main current wiring between XTPR…B and contactor in toolless plug connection	1	
		Use contactor auxiliary switch XTCEXFAT_. Control cable guidance: max. six cables up to 2.5 mm² external diameter or four cables up to 3.5 mm² external diameter.		
XTPAXEMCB 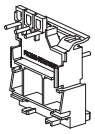	XTPR…B + XTCE…B	Mechanical connection element for XTPR…B and contactor	1	**XTPAXEMCB**
		Main current wiring between XTPR…B and contactor screw in type connection	1	
XTPAXTPC_ 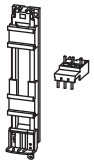	XTPR…B + XTCE…C	DIN rail adapter plate Main current wiring between XTPR and contactor	1	**XTPAXTPCC**
	XTPR…D + XTCE…D	DIN rail adapter plate Main current wiring between XTPR and contactor	1	**XTPAXTPCD**

Notes

① Orders must be placed in multiples of package quantity listed.

② For three-phase commoning link, protected against accidental contact, U_e = 690V, I_u = 63A;
For conductor cross-sections: 2.5–25 mm² stranded; 2.5–16 mm² flexible with ferrules, AWG 14-6.

③ XTPAXLSA is for three-phase commoning link, finger and back-of-hand proof,
U_e = 690V, I_u = 60A for conductor cross sections: 2.5–25 mm² stranded,
2.5–16 mm² flexible with ferrule, AWG 14-6.

④ XTPAXLSAD cannot be combined with three-phase commoning links. Conductor size 8 AWG–1/0.

Reversing Starters

	For Use with…	Description/Comprised of …	Std. Pack ①	Catalog Number
XTPAXTPCRB 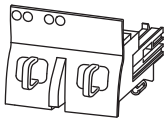	XTPR…B + XTCE…B01_	Mechanical connection element for XTPR…B and contactor	1	**XTPAXTPCRB**
		Reversing starter main current wiring in toolless plug connection	1	
		Control cables for electrical interlocking in toolless plug connection: – K1M: A1–K2M: 21 – K1M: 21–K2M: A1 – K1M: A2–K2M: A2	1	
		Cable guidance	1	
		Use contactor auxiliary switch XTCEXFAT_. Control cable guidance: max. six cables up to 2.5 mm^2 external diameter or four cables up to 3.5 mm^2 external diameter.		
XTPAXTPCRC 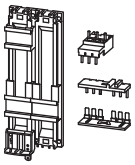	XTPR…B + XTCE…C	DIN rail adapter plate	1	**XTPAXTPCRC**
		Reversing starter main current wiring	1	

Note

① Orders must be placed in multiples of package quantity listed.

XTPAXECM_

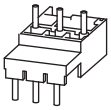

Electrical Connection Module

For Use with…	Description/Comprised of …	Std. Pack ①	Catalog Number
XTPR…B + XTCE…C	Main current wiring between XTPR…B and contactor	5	**XTPAXECMC**
XTPR…D + XTCE…D	Main current wiring between XTPR…D and contactor	5	**XTPAXECMD**

DIN Rail Adapter Plates

XTPAXTPCPB

XTPAXTPCPD

For Use with…	Description/Comprised of …	Std. Pack ①	Catalog Number
XTPAXTPCB XTPAXTPCRB	45 mm wide adapter plate with one DIN rail	4	**XTPAXTPCPB**
	Connection element for side-by-side positioning of further plates		
XTPAXECMD XTPR…D + XTCE…C XTPR…D + XTCE…D	55 mm wide adapter plate with two DIN rails	4	**XTPAXTPCPD**
	Connection cams for further plates		
	For use with reversing and star-delta starters		

Note

① Orders must be placed in multiples of package quantity listed.

Pushbutton MMP Enclosures

Insulated Enclosures for Surface Mounting of XTPB Pushbutton Motor-Protective Circuit Breakers—Global Usage ①

	Degree of Protection	For Use with…	Description	Catalog Number
	IP40 NEMA 1	XTPB MMP only or with: XTPAXFA_, XTPBXFAEM20, XTPAXSA_, XTPAXUVR_, XTPAXSR_	—	**XTPBXENCS40**
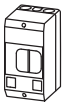	IP65 NEMA 3R, 4X, 12, 13		With actuation membrane.	**XTPBXENCS65**
	IP65 NEMA 3R, 4X, 12, 13	XTPB MMP only or with: XTPAXFA_, XTPAXUVR_, XTPAXSR_, XTPAXCL	Lockable in OFF position.	**XTPBXENCSLO65**
	IP65 NEMA 3R, 4X, 12, 13	XTPB MMP only or with: XTPAXFA_, XTPBXFAEM20, XTPAXUVR_, XTPAXSR_, XTPAXCL	Lockable in OFF position in combination with XTPBXFAEM20 early-make front-mount auxiliary contact	**XTPBXENCSLE65**
	IP65 NEMA 3R, 4X, 12, 13		With emergency-stop (e-stop) pushbutton actuator, red-yellow	**XTPBXENCSES65**
	IP65 NEMA 3R, 4X, 12, 13		With emergency-stop (e-stop) pushbutton actuator, red-yellow key release	**XTPBXENCSEK65**

Insulated Enclosures for Surface Mounting of XTPB Pushbutton Manual Motor Protectors—North American Usage ②③

	Degree of Protection	For Use with…	Description	Catalog Number
	IP41 NEMA 1	XTPB MMP only or with: XTPAXFA_, XTPBXFAEM20, XTPAXSA_, XTPAXUVR_, XTPAXSR_	—	**XTPBXENAS41**
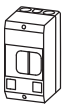	IP65 NEMA 3R, 4X, 12, 13		With actuating diaphragm	**XTPBXENAS65**
	IP65 NEMA 3R, 4X, 12, 13	XTPB MMP only or with: XTPAXFA_, XTPAXUVR_, XTPAXSR_, XTPAXCL	Lockable in OFF position	**XTPBXENASLO65**
	IP65 NEMA 3R, 4X, 12, 13	XTPB MMP only or with: XTPAXFA_, XTPBXFAEM20, XTPAXUVR_, XTPAXSR_, XTPAXCL	Lockable in OFF position in combination with XTPBXFAEM20 early-make front-mount auxiliary contact	**XTPBXENASLE65**
	IP65 NEMA 3R, 4X, 12, 13		With emergency-stop (e-stop) pushbutton actuator, red-yellow	**XTPBXENASES65**
	IP65 NEMA 3R, 4X, 12, 13		With emergency-stop (e-stop) pushbutton actuator, red-yellow key release	**XTPBXENASEK65**

Notes

① Integrated terminal for PE(N) connection, two M25 cable entry knockouts at top and at bottom.
② Built-in terminal for PE(N).
③ North American enclosures come with conduit adapters for use with 1/2 in NPT.

Insulated Enclosures for Surface Mounting of XTPB Pushbutton Manual Motor Protectors—North American Usage ①

	Degree of Protection	For Use with…	Description	Catalog Number
	Front IP40 NEMA 1	XTPB MMP only or with: XTPAXFA_, XTPBXFAEM20, XTPAXSA_, XTPAXUVR_, XTPAXSR_	—	**XTPBXENCF40**
	Front IP65 NEMA 3R, 4X, 12, 13		With actuating diaphragm	**XTPBXENCF55**
	Front IP65 NEMA 3R, 4X, 12, 13	XTPB MMP only or with: XTPAXFA_, XTPAXUVR_, XTPAXSR_, XTPAXCL	Lockable in OFF position	**XTPBXENCFLO55**
	Front IP65 NEMA 3R, 4X, 12, 13	XTPB MMP only or with: XTPAXFA_, XTPBXFAEM20, XTPAXUVR_, XTPAXSR_, XTPAXCL	Lockable in OFF position in combination with XTPBXFAEM20 early-make front-mount auxiliary contact	**XTPBXENCFLE55**
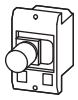	Front IP65 NEMA 3R, 4X, 12, 13		With emergency-stop (e-stop) pushbutton actuator, red-yellow	**XTPBXENCFES55**
	Front IP65 NEMA 3R, 4X, 12, 13		With emergency-stop (e-stop) pushbutton actuator, red-yellow key release	**XTPBXENCFEK55**

Note

① Integrated terminal for PE(N) connection.

Rotary MMP Enclosures

Insulated Enclosures for Surface Mounting of Frame B (0.1–32A) XTPR Motor-Protective Circuit Breakers—Global Usage

	Degree of Protection	For Use with…	Description	Catalog Number
	IP41 with vertical mounting	Frame B XTPR only or with: XTPAXFA_, XTPAXSA_, XTPAXSATR_, XTPAXUVR_, XTPAXSR_, XTPAXCL	Cover with aperture dimensioned to accommodate front of MMP. IP40, when mounted turned through 90° to left/right	**XTPAXENCS41** ①
	IP65		With black/grey rotary handle	**XTPAXENCS65B** ①
	IP65		With red/yellow rotary handle for use as emergency-stop switches to IEC/EN 60204	**XTPAXENCS65RY** ①
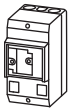	IP40	Frame B XTPR only or with: XTPAXSA_, XTPAXUVR_, XTPAXSR_, XTPAXCL	Cover with aperture dimensioned to accommodate front of MMP	**XTPAXENCS40** ②
	IP55	Frame B XTPR only or with: XTPAXFA_, XTPAXSA_, XTPAXUVR_, XTPAXSR_, XTPAXCL	With black/gray rotary handle	**XTPAXENCS55B** ②
	IP55		With red/yellow rotary handle for use as emergency-stop switches to IEC/EN 60204	**XTPAXENCS55RY** ②

Insulated Enclosures for Surface Mounting of Frame B (0.1–32A) XTPR Rotary Manual Motor Protectors—North American Usage ③

	Degree of Protection	For Use with…	Description	Catalog Number
	IP55 NEMA 1, 12, 3R	Frame B XTPR only or with: XTPAXSA_ and XTPAXFA_, XTPAXUVR_ and XTPAXFA_, XTPAXSR_ and XTPAXFA_, XTPAXCL	With black/gray rotary handle	**XTPAXENAS55B**
			With red/yellow rotary handle for use as emergency-stop switch to VDE 0113	**XTPAXENAS55RY**

Insulated Enclosures for Surface Mounting of Frame B XTPR (0.1–32A) Rotary Motor-Protective Circuit Breakers with XTPAXFAEM20 Early-Make Front-Mount Auxiliary Contact—Global Usage

	Degree of Protection	For Use with…	Description	Catalog Number
	IP65	Frame B XTPR and XTPAXFAEM20 only or with: XTPAXFA_, XTPAXSA_, XTPAXSATR_, XTPAXUVR_, XTPAXSR_, XTPAXCL	With black/gray rotary handle	**XTPAXENCSEM65B**
	IP65		With red/yellow rotary handle for use as emergency-stop switches to IEC/EN 60204	**XTPAXENCSEM65RY**
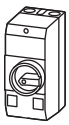	IP55	Frame B XTPR and XTPAXFAEM20 only or with: XTPAXFA_, XTPAXUVR_, XTPAXSR_, XTPAXCL	With black/gray rotary handle	**XTPAXENCSEM55B**
	IP55		With red/yellow rotary handle for use as emergency-stop switches to IEC/EN 60204	**XTPAXENCSEM55RY**

Notes

① M25 metric cable entry knock-out, top and bottom. Cable push-through membrane, top and bottom, in the back plate and as a control line entry. Includes N and PE terminals.

② Integrated terminal for PE(N) connection, two M25 cable entry knockouts at the top and bottom.

③ Built-in N and PE terminal, lower part without knockouts.

Insulated Enclosures for Surface Mounting of Frame B XTPR (0.1–32A) Rotary Manual Motor Protectors with XTPAXFAEM20 Early-Make Front-Mount Auxiliary Contact—North American Usage ①

Degree of Protection	For Use with…	Description	Catalog Number
IP55 NEMA 1, 12, 3R	Frame B XTPR only or with: XTPAXSA_, XTPAXUVR_, XTPAXCL	With black/grey rotary handle	**XTPAXENASEM55B**
		With red/yellow rotary handle for use as emergency-stop switch to VDE 0113	**XTPAXENASEM55RY**

Insulated Enclosures for Flush Mounting of Frame B (0.1–32A) XTPR Rotary Manual Motor Protectors—Global Usage ②

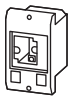

Degree of Protection	For Use with…	Description	Catalog Number
Front IP40	Frame B XTPR only or with: XTPAXSA_, XTPAXUVR_, XTPAXSR_, XTPAXCL	Cover with aperture dimensioned to accommodate front of MMP	**XTPAXENCF40**
Front IP55	Frame B XTPR only or with: XTPAXSA_, XTPAXUVR_, XTPAXSR_, XTPAXFA_, XTPAXCL	With black/gray rotary handle	**XTPAXENCF55B**
		With red/yellow rotary handle for use as emergency-stop switches to IEC/EN 60204	**XTPAXENCF55RY**

Insulated Enclosures for Surface Mounting of Frame D (10–65A) Rotary Motor-Protective Circuit Breakers

Degree of Protection	For Use with…	Description	Catalog Number
IP65 NEMA 1, 12, 3R, 4X	Frame D XTPR only or with: XTPAXFA_, XTPAXFAEM20, XTPAXSA_, XTPAXSATR_, XTPAXUVR_, XTPAXSR_, XTPAXCL	With black/gray rotary handle	**XTPAXENCSD65B**
IP65 NEMA 1, 12, 3R, 4X		With red/yellow rotary handle for use as emergency-stop switches to IEC/EN 60204	**XTPAXENCSD65RY**

Notes

① Built-in N and PE terminal, lower part without knockouts.

② Integrated terminal for PE(N) connection.

MMP Enclosure Accessories

XTPAXPL_

XTPR Manual Motor Protector Enclosure Padlock Attachment

For Use with…	Description	Pkg. Qty. ①	Catalog Number
XTPAXENCS65B, XTPAXENCS65RY, XTPAXENCSEM65B, XTPAXENCSEM65RY, XTPAXENCS55B, XTPAXENCS55RY, XTPAXENCSEM55B, XTPAXENCSEM55RY	Padlocking feature. Up to three padlocks with 3–6 mm hasp thickness. For use as main switch to IEC/EN 60204	3	**XTPAXPL1** ②
XTPAXENCSD65B, XTPAXENCSD65RY		1	**XTPAXPL2** ②
XTPAXENCF55B, XTPAXENCF55RY		3	**XTPAXPL3** ③

XTPAXNT

Neutral Terminal for Use with XTPB and Frame B XTPR Flush-Mount Enclosures

For Use with…	Description	Pkg. Qty. ①	Catalog Number
XTPBXENCF40, XTPBXENCF55, XTPAXENCF40, XTPAXENCF55B, XTPAXENCF55RY	For connection of a fifth conductor	20	**XTPAXNT**

XTPAXIL_

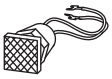

Indicating Lights with Neon Bulb ④

Color	Description—Indicating Light	Pkg. Qty. ①	Catalog Number
White	110–230V	10	**XTPAXILWB**
	230–400V	10	**XTPAXILWN**
	415–500V	10	**XTPAXILWC**
Green	110–230V	10	**XTPAXILGB**
	230–400V	10	**XTPAXILGN**
	415–500V	10	**XTPAXILGC**
Red	110–230V	10	**XTPAXILRB**
	230–400V	10	**XTPAXILRN**

For use with XTPR and XTPB enclosures.

Lights do not carry individual IP or NEMA rating. All enclosure ratings remain valid when using indicating lights.

Notes

① Orders must be placed in multiples of package quantity listed.
② Lockable in the 0-position of the XTPR manual motor protector.
③ Lockable in the OFF position of the Frame B XTPR manual motor protector.
④ Product is not UL Listed/Registered.

1

Technical Data and Specifications

XT Manual Motor Protectors

Description	XTPBP16B–XTPB025B	XTPRP16B–XTPR032B	XTPR016D–XTPR063D
General			
Standards	IEC/EN 60947, VDE 0660, UL 508, CSA C22.2 No. 14	IEC/EN 60947, VDE 0660, UL 508, CSA C22.2 No. 14	IEC/EN 60947, VDE 0660, UL 508, CSA C22.2 No. 14
Climatic proofing	①	①	①
Ambient temperature, °C			
Storage	–25/80	–25/80	–25/70
Open	–25/55	–25/55	–25/55
Enclosed	–25/40	–25/40	–25/40
Mounting position	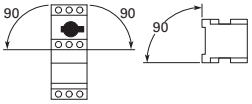	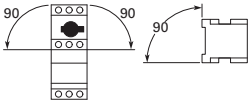	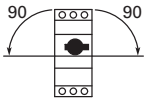
Direction of incoming supply	As required	As required	As required
Degree of protection			
Device	IP20	IP20	IP20
Terminals	IP00	IP00	IP00
Protection against direct contact	Finger and back-of-hand proof	Finger and back-of-hand proof	Finger and back-of-hand proof
Shock resistance half-sinusoidal shock 10 ms to IEC 60068-2-27 (g)	25	25	15
Altitude (m), maximum	2000	2000	2000
Terminal capacity			
Solid (mm^2)	1 x (1–6) 2 x (1–6)	1 x (1–6) 2 x (1–6)	1 x (1–50) 2 x (1–35)
Flexible with ferrule to DIN 46228, (mm^2)	1 x (1–6) 2 x (1–6)	1 x (1–6) 2 x (1–6)	1 x (1–35) 2 x (1–35)
Solid or stranded (AWG)	18–10	18–10	14–2
Terminal screw tightening torque			
Main cable, Nm	1.7	1.	3
Main cable, lb-in	15.0	15.0	26.6
Control circuit cable, Nm	1	1	1
Control circuit cable, lb-in	8.9	8.9	8.9
Main Contacts			
Rated impulse withstand voltage (U_{imp}), Vac	6000	6000	6000
Overvoltage category/pollution degree	III/3	III/3	III/3
Rated operational voltage (U_e), Vac	690	690	690
Rated uninterrupted current = rated operational current ($I_u = I_e$) in amperes	25 or current setting of the overcurrent release	25 or current setting of the overcurrent release	25 or current setting of the overcurrent release
Rated frequency, Hz	40–60	40–60	40–60
Current heat loss (three-pole at operating temperature), W	6	6	22
Lifespan, mechanical (ops)	50,000	100,000	30,000
Lifespan, electrical (AC-3 at 400V) (ops)	50,000	100,000	30,000
Maximum operating frequency, operations/hr	25	40	40
Short-circuit rating			
AC	See **Page V5-T1-181**	See **Page V5-T1-181**	See **Page V5-T1-181**
DC (kA)	60	60 (up to XTPR016B) 40 (XTPR020B–XTPR032B)	60
Motor switching capacity			
AC-3 (up to 690V) in amperes	25	32	65
DC-5 (up to 250V) in amperes	25	25 (3 contacts in series)	63 (3 contacts in series)

Note

① Damp heat, constant, to IEC 60068-2-78; damp heat, cyclic, to IEC 60068-2-30.

XT Manual Motor Protectors, continued

Description	XTPBP16B–XTPB025B	XTPRP16B–XTPR032B	XTPR016D–XTPR063D
Releases			
Overload release setting range (x I_u)	0.6–1.0	0.6–1.0	0.6–1.0
Fixed short-circuit release (x I_u)	14	14	14
Short-circuit release tolerance	± 20%	± 20%	± 20%
Phase-failure sensitivity	IEC/EN 60947-1-1, VDE 0660 Part 102	IEC/EN 60947-1-1, VDE 0660 Part 102	IEC/EN 60947-1-1, VDE 0660 Part 102
Temperature compensation			
to IEC/EN 60947, VDE 0660, °C	–5/40	–5/40	–5/40
operating range, °C	–25/55	–25/55	–25/55
Temperature compensation residual error for T >20°C, %/K	≤0.25	≤0.25	≤0.25

Auxiliary Contacts

Description	XTPAXSA_ _	XTPAXFA_ _	XTPA(B)XFAEM_ _	XTPAXSATR_ _
Rated impulse withstand voltage, U_{imp} (Vac)	6000	4000	4000	6000
Overvoltage category/pollution degree	III/3	III/3	III/3	III/3
Rated operational voltage				
U_e (Vac)	500	440	440	500
U_e (Vdc)	250	250	250	250
Safe isolation to VDE 0106 Part 101 and Part 101/A1 between auxiliary contacts and main contacts (Vac)	690	690	690	690
Rated operational current				
AC-15				
220–240 V, I_e (A)	3.5	1	1	3.5
380–415 V, I_e (A)	2	—	—	2
440–500 V, I_e (A)	1	—	—	1
DC-13 L/R <100 ms				
24 V, I_e (A)	2	2	2	2
60 V, I_e (A)	1.5	—	—	1.5
110 V, I_e (A)	1	—	—	1
220 V, I_e (A)	0.25	—	—	0.25
Lifespan				
Mechanical, operations (x 10^6)	0.1	0.1	0.1	0.01
Electrical, operations (x 10^6)	0.05	0.1	0.1	0.005
Contact reliability (at U_e = 24 Vdc, U_{min}–17V, I_{min} = 5.4 mA, fault probability	$<10^{-8}$ <1 fault at 1 x 10^8 operations	$<10^{-8}$ <1 fault at 1 x 10^8 operations	$<10^{-8}$ <1 fault at 1 x 10^8 operations	$<10^{-8}$ <1 fault at 1 x 10^8 operations
Positively driven contacts to ZH 1/457	Yes	—	—	—
Short-Circuit Rating without Welding				
Fuseless	FAZ-B4/1-HI	—	—	FAZ-B4/1-HI
Fuse (A gG/gL)	10	10	10	10
Terminal Capacity				
Solid or flexible conductor with ferrule (mm^2)	0.75–2.5	0.75–1.5	0.75–1.5	0.75–2.5
Solid or stranded (AWG)	18–14	18–16	18–16	18–14

Undervoltage Release

Description	XTPAXUVR_
Cross-Section	
Solid or flexible conductor with ferrule (mm^2)	1 x (0.75–2.5) 2 x (0.75–2.5)
Solid or stranded (AWG)	1 x (18–14) 2 x (18–14)
Main Contact	
Rated operational voltage, U_e (Vac)	42–480
Rated operational voltage, U_e (Vdc)	24–250
Pickup voltage, x U_s	0.85–1.1
Dropout voltage, x U_s	0.7–0.35
Power Consumption	
Pickup AC (VA)	5
Sealing AC (VA)	3

Current Limiter

Description	XTPAXCL
Rated impulse withstand voltage (U_{imp}), Vac	6000
Overvoltage category/pollution degree	III/3
Rated operational voltage, U_e (Vac)	690
Rated interrupted current = Rated operational current ($I_u = I_e$) in amperes	63

XTPB, XTPR Single- and Two-Pole Circuits with DC and AC Current

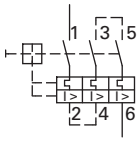

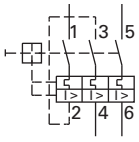

Protection of PVC Insulated Cables Against Thermal Overload at Short-Circuit

Min. Cross-Section Protected 380-415V, 50 Hz, Cu mm^2					Device Type
4	2.5	1.5	1	0.75	
					XTPRP16BC1
					⋮
					XTPR6P3BC1
					XTPR010BC1
					XTPR016BC1
					XTPR020BC1
					XTPR025BC1
					XTPR016DC1
					XTPR025DC1
					XTPR032DC1
					XTPR040DC1
					XTPR050DC1
					XTPR058DC1
					XTPR063DC1

The chart above indicates which minimum cable cross-sections are protected by XTPR motor protective circuit breakers up to their rated conditional short-circuit current I_q.

Shunt Release

Description	XTPAXSR __
Cross-Section	
Solid or flexible conductor with ferrule (mm^2)	1 x (0.75–2.5) 2 x (0.75–2.5)
Solid or stranded (AWG)	1 x (18–14) 2 x (18–14)
Main Contact	
Rated operational voltage, U_e (Vac)	42–480
Rated operational voltage, U_e (Vdc)	24–250
AC operating range, x U_s	0.7–1.1
DC operating range, x U_s (intermittent operation 5s)	0.7–1.1
Power Consumption	
Pickup AC (VA)	5
Sealing AC (VA)	3
Pickup DC (VA)	3
Sealing DC (VA)	3

Wiring Diagrams

Fuseless Installation with XTPR

Backup Protection Diagram—XTPR...B

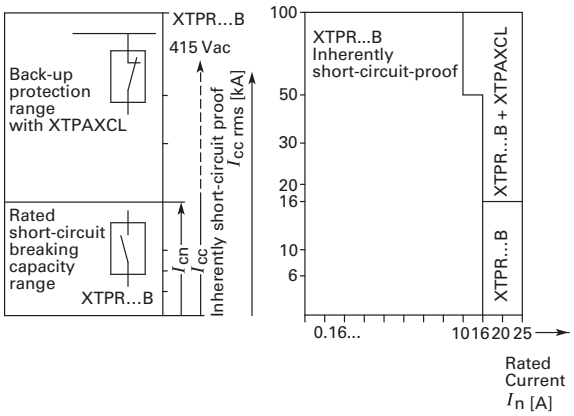

Backup Protection Diagram—XTPR...D

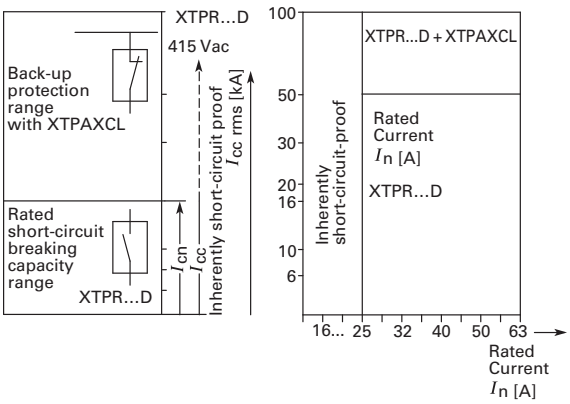

Time/Current Curves

Characteristics

The time/current characteristic, the current limiting characteristics and the I^2t characteristics were determined in accordance with DIN VDE 0660 and IEC 60 947.

The tripping characteristic of the **inverse-time delayed overload releases** (thermal overload releases or "a" releases) for DC and AC with a frequency of 0 to 400 Hz also apply to the time/current characteristic.

The characteristics apply to the cold state. At operating temperature, the tripping times of the thermal releases are reduced to approximately 25%.

Under normal operating conditions, all three-poles of the device must be loaded. The three main conducting paths must be connected in series in order to protect single-phase or DC loads.

With three-pole loading, the maximum deviation in the tripping time for 3 times the setting current and upwards is ±20% and thus in accordance with DIN VDE 0165.

The tripping characteristics for the instantaneous, electromagnetic overcurrent releases (short-circuit releases or "n" releases) are based on the rated current I_n, which is also the maximum value of the setting range for circuit breakers with adjustable overload releases. If the current is set to a lower value, the tripping current of the "n" release is increased by a corresponding factor.

The characteristics of the electromagnetic overcurrent releases apply to frequencies of 50/60 Hz. Appropriate correction factors must be used for lower frequencies up to 16-2/3 Hz, for higher frequencies up to 400 Hz and for DC.

Time/current characteristics, current limiting characteristics and I^2t characteristics are available on request.

MMP Tripping Characteristics

XTPB, XTPR Frame B

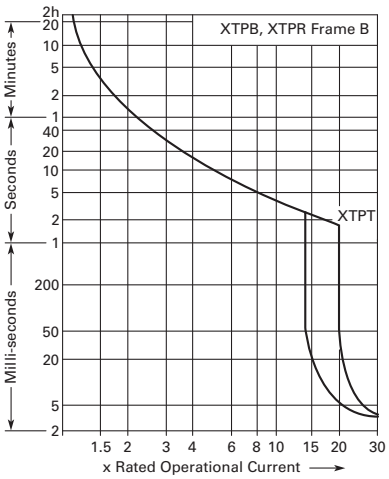

XTPR Frame D

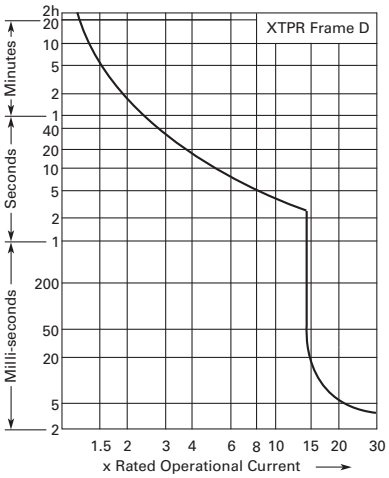

1

MMP Let-Through Tripping Characteristics

XTPB, XTPR Frame B

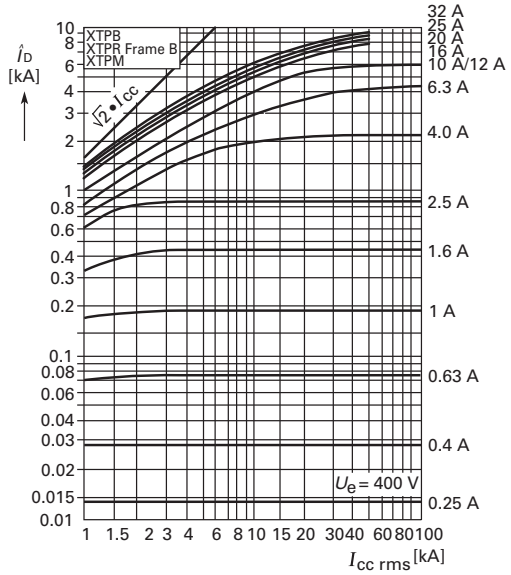

XTPR Frame D

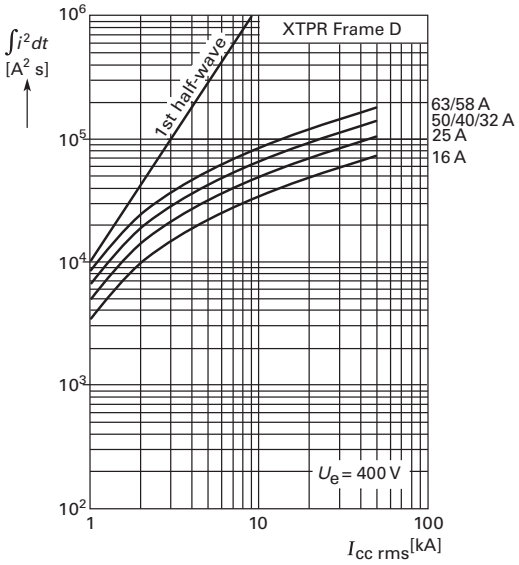

XTPR Frame D

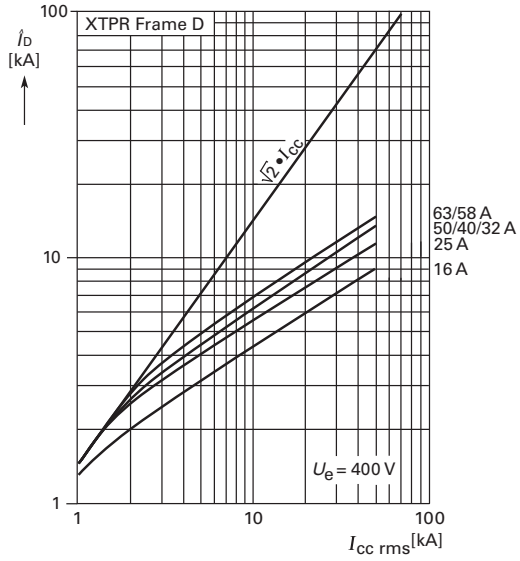

Manual Motor Protector Short-Circuit Ratings

Rated uninterrupted current I_u = Rated operational current I_e.
Rated conditional short-circuit current I_q—IEC/EN 60947-4-1.
Rated ultimate short-circuit breaking capacity I_{cu}— IEC/EN 60947-2.
Rated operational short-circuit breaking capacity I_{cs}— IEC/EN 60947-2.

Global Use, IEC/EN 60947—XTPB with Classification Type "1" and Type "2"

	230V				400V				440V				500V				690V			
I_u	I_q	I_{cu}	I_{cs}	Fuse ①②	I_q	I_{cu}	I_{cs}	Fuse ①②	I_q	I_{cu}	I_{cs}	Fuse ①②	I_q	I_{cu}	I_{cs}	Fuse ①②	I_q	I_{cu}	I_{cs}	Fuse ①②
A	kA	kA	kA	A	kA	kA	kA	A	kA	kA	kA	A	kA	kA	kA	A	kA	kA	kA	A
0.16–1	50	50	50	50	50	50	50	50	50	50	50	50	—	—	—	—	—	—	—	—
1.6	50	50	50	50	50	50	50	50	50	50	50	50	—	—	—	—	—	—	—	—
2.5	50	50	50	50	50	50	50	50	50	50	50	50	—	—	—	—	—	—	—	—
4	50	50	50	50	50	50	50	50	50	50	50	50	—	—	—	—	—	—	—	—
6.3	50	50	50	50	50	50	50	50	50	50	50	50	—	—	—	—	—	—	—	—
10	50	50	50	50	50	50	50	50	42	42	10	50	—	—	—	—	—	—	—	—
12	50	50	10	50	50	50	10	50	15	15	10	50	—	—	—	—	—	—	—	—
16	50	50	10	50	50	50	10	50	15	15	10	50	—	—	—	—	—	—	—	—
20	50	50	10	50	50	50	10	50	10	10	10	50	—	—	—	—	—	—	—	—
25	50	50	10	50	50	50	10	50	10	10	10	50	—	—	—	—	—	—	—	—

Global Use, IEC/EN 60947—XTPR…BC1 with Classification Type "1" and Type "2"

	230V				400V				440V				500V				690V			
I_u	I_q	I_{cu}	I_{cs}	Fuse ①②	I_q	I_{cu}	I_{cs}	Fuse ①②	I_q	I_{cu}	I_{cs}	Fuse ①②	I_q	I_{cu}	I_{cs}	Fuse ①②	I_q	I_{cu}	I_{cs}	Fuse ①②
A	kA	kA	kA	A	kA	kA	kA	A	kA	kA	kA	A	kA	kA	kA	A	kA	kA	kA	A
0.16–1	150 ③	150 ③	150 ③	N	150 ③	150 ③	150 ③	N	③	③	③	N	③	③	③	N	③	③	③	N
1.6	150 ③	150 ③	150 ③	N	150 ③	150 ③	150 ③	N	③	③	③	N	③	③	③	N	③	③	③	N
2.5	150 ③	150 ③	150 ③	N	150 ③	150 ③	150 ③	N	③	③	③	N	③	③	③	N	5	5	5	50
4	150 ③	150 ③	150 ③	N	150 ③	150 ③	150 ③	N	③	③	③	N	③	③	③	N	3	3	3	50
6.3	150 ③	150 ③	150 ③	N	150 ③	150 ③	150 ③	N	③	③	③	N	42	42	6	50	3	3	2	50
10	150 ③	150 ③	150 ③	N	150 ③	150 ③	150 ③	N	42	42	10	50	42	42	6	50	3	3	2	50
12	50	50	10	50	50	50	10	50	15	15	10	50	15	15	6	50	3	3	2	50
16	50	50	10	50	50	50	10	50	15	15	10	50	15	15	6	50	3	3	2	50
20	50	50	10	50	50	50	10	50	15	15	10	50	6	6	6	50	3	3	2	50
25	50	50	10	50	50	50	10	50	10	10	10	50	6	6	6	50	3	3	2	50
32	50	50	10	50	50	50	10	50	10	10	10	50	6	6	6	50	3	3	2	50

Notes

① N = Not required.

② XTPR…BC1, XTPT, XTPM—Required back-up fuse if the short-circuit current exceeds the rated conditional short-circuit current ($I_{cc} > I_q$); XTPB, XTPR…DC1—Fuse (A gG/gL) for enhancing the switching capacity of the motor protective circuit breaker to 100 kA.

③ No upstream protective device required, as it is the auto-protected range (100/150 kA—Frame B, 150 kA—Frame D).

Global Use, IEC/EN 60947—XTPR…DC1 with Classification Type "1" and Type "2"

	230V				400V				440V				500V				690V			
I_u	I_q	I_{cu}	I_{cs}	Fuse ①②	I_q	I_{cu}	I_{cs}	Fuse ①②	I_q	I_{cu}	I_{cs}	Fuse ①②	I_q	I_{cu}	I_{cs}	Fuse ①②	I_q	I_{cu}	I_{cs}	Fuse ①②
A	kA	kA	kA	A	kA	kA	kA	A	kA	kA	kA	A	kA	kA	kA	A	kA	kA	kA	A
16	150 ③	150 ③	25	N	150 ③	150 ③	25	N	45	45	25	100	15	15		100	8	8	2.5	100
25	150 ③	150 ③	25	N	150 ③	150 ③	25	N	45	45	25	100	15	15		100	8	8	2.5	100
32	50	50	25	100	50	50	25	100	45	45	25	100	15	15		100	5	5	2.5	100
40	50	50	25	100	50	50	25	100	45	45	25	100	15	15		100	5	5	2.5	100
50	50	50	25	100	50	50	25	100	45	45	25	100	15	15		100	5	5	2.5	100
58	50	50	25	160	50	50	25	160	45	45	25	160	15	15		160	5	5	2.5	160
63	50	50	25	160	50	50	25	160	45	45	25	160	15	15		160	5	5	2.5	160

Ratings for Group Motor Applications

UL 508/CSA C22.2 No. 14—XTPB—Frame B, Manual Motor Protector with Thermal and Magnetic Trip

Catalog Number	Rated Uninterrupted Current—I_u (Amps)	FLA Adjustment Range/Overload Release—I_r (Amps)	Short Circuit Release—I_{rm} (Amps)	Maximum Protective Device for UL/CSA Group Protection					
				Maximum rms Sym Current—480V (kA)	w/Current Limiter—XTPAXCL	Maximum Fuse Rating (A)	w/Current Limiter—XTPAXCL	Circuit Breaker Maximum (A)	w/Current Limiter—XTPAXCL
XTPBP16BC1	0.16	0.1–0.16	2.2	50	—	600	—	600	—
XTPBP25BC1	0.25	0.16–0.25	3.5	50	—	600	—	600	—
XTPBP40BC1	0.4	0.25–0.4	5.6	50	—	600	—	600	—
XTPBP63BC1	0.63	0.4–0.63	8.8	50	—	600	—	600	—
XTPB001BC1	1	0.63–1	14	50	—	600	—	600	—
XTPB1P6BC1	1.6	1–1.6	22	50	—	600	—	600	—
XTPB2P5BC1	2.5	1.6–2.5	35	50	—	600	—	600	—
XTPB004BC1	4	2.5–4	56	50	—	600	—	600	—
XTPB6P3BC1	6.3	4–6.3	88	50	—	600	—	600	—
XTPB010BC1	10	6.3–10	140	30	50	600	600	600	600
XTPB012BC1	12	8–12	168	10	50	150	600	125 ⑤	600
XTPB016BC1	16	10–16	224	10	50	150	600	125 ⑤	600
XTPB020BC1 ④	20	16–20	280	10	18	150	600	125	600
XTPB025BC1 ④	25	20–25	350	10	18	150	600	125	600

Notes

① N = Not required.

② XTPR…BC1, XTPT, XTPM—Required back-up fuse if the short-circuit current exceeds the rated conditional short-circuit current ($I_{cc} > I_q$); XTPB, XTPR…DC1—Fuse (A gG/gL) for enhancing the switching capacity of the motor protective circuit breaker to 100 kA.

③ No upstream protective device required, as it is the auto-protected range (100/150 kA—Frame B, 150 kA—Frame D).

④ IEC/EN 60947-4-1.

⑤ 22 kA 600 Vac.

UL 508/CSA C22.2 No. 14—XTPR—Frame B (all Screw and Spring Cage Terminal Options), Manual Motor Protector with Thermal and Magnetic Trip

Catalog Number	Rated Uninterrupted Current—I_u (Amps)	FLA Adjustment Range/Overload Release—I_r (Amps)	Short Circuit Release—I_{rm} (Amps)	Maximum Protective Device for UL/CSA Group Protection					
				Maximum rms Sym Current—480V (kA)	w/Current Limiter—XTPAXCL	Maximum Fuse Rating (A)	w/Current Limiter—XTPAXCL	Circuit Breaker Maximum (A)	w/Current Limiter—XTPAXCL
XTPRP16BC1	0.16	0.1–0.16	2.2	50	—	600	—	600	—
XTPRP25BC1	0.25	0.16–0.25	3.5	50	—	600	—	600	—
XTPRP40BC1	0.4	0.25–0.4	5.6	50	—	600	—	600	—
XTPRP63BC1	0.63	0.4–0.63	8.8	50	—	600	—	600	—
XTPR001BC1	1	0.63–1	14	50	—	600	—	600	—
XTPR1P6BC1	1.6	1–1.6	22	50	—	600	—	600	—
XTPR2P5BC1	2.5	1.6–2.5	35	50	—	600	—	600	—
XTPR004BC1	4	2.5–4	56	50	—	600	—	600	—
XTPR6P3BC1	6.3	4–6.3	88	50	—	600	—	600	—
XTPR010BC1	10	6.3–10	140	30	50	600	600	600	600
XTPR012BC1	12	8–12	168	10	50	150	600	125	600
XTPR016BC1	16	10–16	224	10	50	150	600	125 ①	600
XTPR032BC1	32	25–32	448	10	18	150	600	125	600
XTPR025BC1	25	20–25	350	10	18	150	600	125	600
XTPR032BC1	32	25–32	448	10	18	150	600	125	600

UL 508/CSA C22.2 No. 14—XTPR—Frame D, Manual Motor Protector with Thermal and Magnetic Trip

Catalog Number	Rated Uninterrupted Current—I_u (Amps)	FLA Adjustment Range/Overload Release—I_r (Amps)	Short Circuit Release—I_{rm} (Amps)	Maximum Protective Device for UL/CSA Group Protection					
				Maximum rms Sym Current—480V (kA)	w/Current Limiter—XTPAXCL	Maximum Fuse Rating (A)	w/Current Limiter—XTPAXCL	Circuit Breaker Maximum (A)	w/Current Limiter—XTPAXCL
XTPR016DC1	16	10–16	224	65	—	600	—	600	—
XTPR025DC1	25	16–25	350	65	—	600	—	600	—
XTPR032DC1	32	25–32	448	65	—	600	—	600	—
XTPR040DC1	40	32–40	560	65	—	600	—	600	—
XTPR050DC1	50	40–50	700	65	—	600	—	600	—
XTPR058DC1	58	50–58	812	65	—	600	—	600	—
XTPR063DC1	65	55–63	882	65	—	600	—	600	—

Note

① 22 kA 600 Vac.

UL 508 Type E Ratings—XTPR Frame B + XTPAXLSA

Manual Motor Protector—Screw Terminal Catalog Number	Line Side Adapter Catalog Number	FLA Adjustment Range/Overload Release—I_r (Amps)	Short Circuit Release—I_{rm} (Amps)	UL 508 Type E Application Maximum rms Symmetrical Short-Circuit Ratings (kA)		Maximum Upstream Protective Device (A) ①	
				480/277V	600/347V	Maximum Fuse 600V	Maximum Circuit Breaker 600V
XTPRP16BB1	**XTPAXLSA**	0.1–0.16	2.2	50	50	Not required	Not required
XTPRP25BC1	**XTPAXLSA**	0.16–0.25	3.5	50	50	Not required	Not required
XTPRP40BC1	**XTPAXLSA**	0.25–0.4	5.6	50	50	Not required	Not required
XTPRP63BC1	**XTPAXLSA**	0.4–0.63	8.82	50	50	Not required	Not required
XTPR001BC1	**XTPAXLSA**	0.63–1	14	50	50	Not required	Not required
XTPR1P6BC1	**XTPAXLSA**	1–1.6	22.4	50	50	Not required	Not required
XTPR2P5BC1	**XTPAXLSA**	1.6–2.5	35	50	50	Not required	Not required
XTPR004BC1	**XTPAXLSA**	2.5–4	56	50	50	Not required	Not required
XTPR6P3BC1	**XTPAXLSA**	4–6.3	88.2	65	50	Not required	Not required
XTPR010BC1	**XTPAXLSA**	6.3–10	140	65	50	Not required	Not required
XTPR012BC1	**XTPAXLSA**	8–12	168	65	—	Not required	Not required
XTPR016BC1	**XTPAXLSA**	10–16	224	42	—	Not required	Not required
XTPR020BC1	**XTPAXLSA**	16–20	280	18	—	Not required	Not required
XTPR025BC1	**XTPAXLSA**	20–25	350	18	—	Not required	Not required
XTPR032BC1	**XTPAXLSA**	25–32	448	18	—	Not required	Not required

UL 508 Type E Ratings—XTPR Frame D + XTPAXLSAD

Manual Motor Protector—Screw Terminal Catalog Number	Line Side Adapter Catalog Number	FLA Adjustment Range/Overload Release—I_r (Amps)	Short Circuit Release—I_{rm} (Amps)	UL 508 Type E Application Maximum rms Symmetrical Short-Circuit Ratings (kA)			Maximum Upstream Protective Device (A) ①	
				240V	480/277V	600/347V	Maximum Fuse 600V	Maximum Circuit Breaker 600V
XTPR016DC1	**XTPAXLSAD**	10–16	224	65	65	25	Not required	Not required
XTPR025DC1	**XTPAXLSAD**	16–25	350	65	65	25	Not required	Not required
XTPR032DC1	**XTPAXLSAD**	25–32	448	65	65	25	Not required	Not required
XTPR040DC1	**XTPAXLSAD**	32–40	560	65	65	25	Not required	Not required
XTPR050DC1	**XTPAXLSAD**	40–50	700	65	65	—	Not required	Not required
XTPR058DC1	**XTPAXLSAD**	50–58	812	65	65	—	Not required	Not required
XTPR063DC1	**XTPAXLSAD**	55–65	882	65	65	—	Not required	Not required

Note

① For UL 508 Type E applications, the manual motor protector assembly does not require a dedicated upstream protective device in the panel, thus a maximum rating is not required.

Dimensions

Approximate Dimensions in mm [in]

Manual Motor Protectors—XTPB

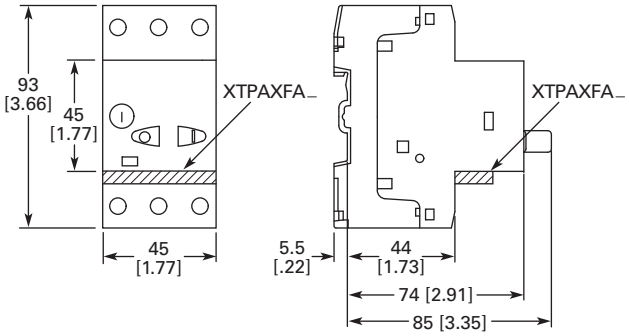

Manual Motor Protectors, Manual Transformer Protectors—XTPR...B

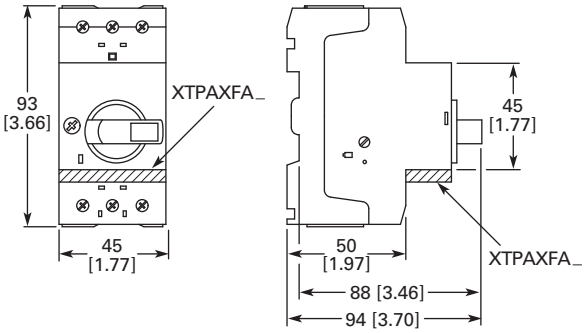

Manual Motor Protector—XTPR...DC1

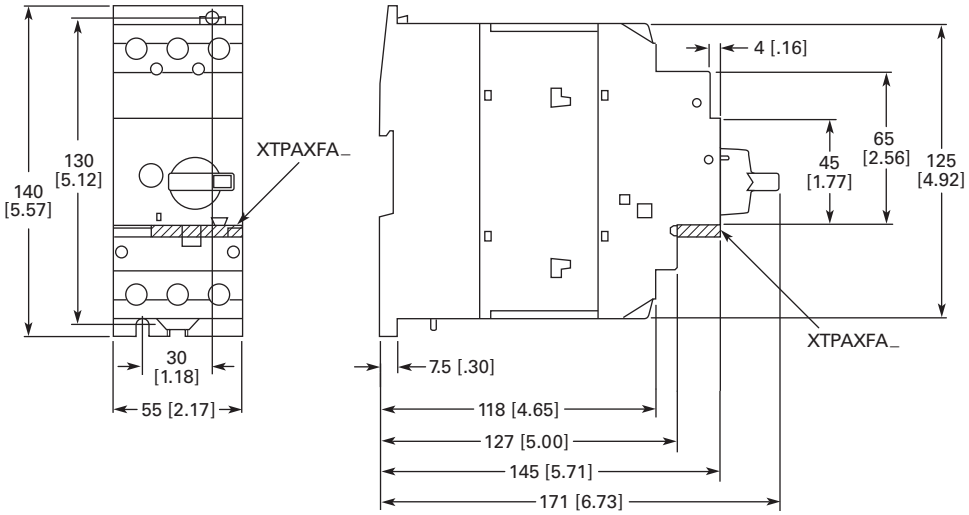

Current Limiter—XTPAXCL

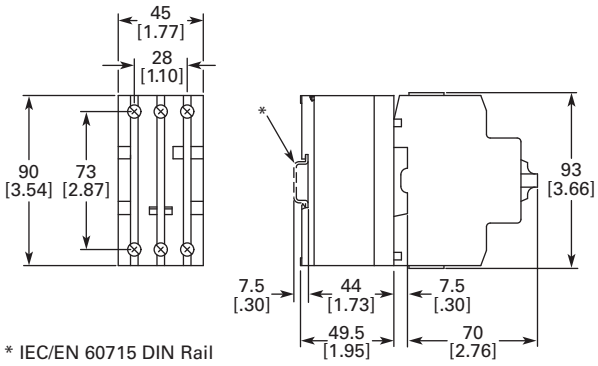

* IEC/EN 60715 DIN Rail

MMPs with Early-Make Auxiliary Contacts—XTPR...BC1 + XTPAXFAEM20

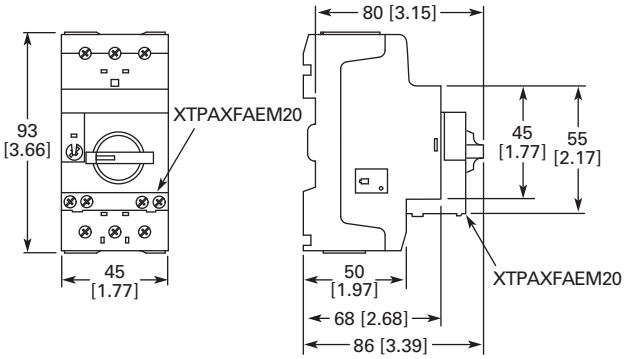

Approximate Dimensions in mm [in]

Standard Auxiliary Contact—XTPAXSA_

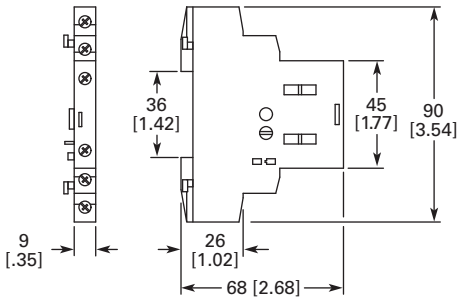

Trip Indicating Auxiliary Contact—XTPAXSATR_

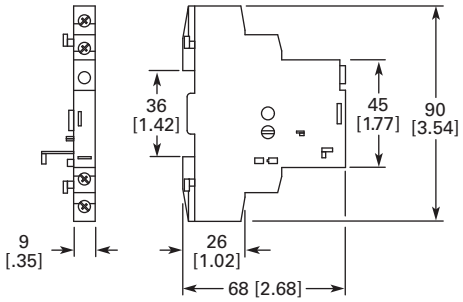

Undervoltage/Shunt Release—XTPAXUVR_, XTPAXSR_

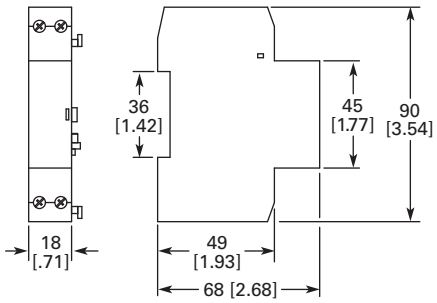

Three-Phase Commoning Link—XTPAXCLKA4, XTPAXCLKA2

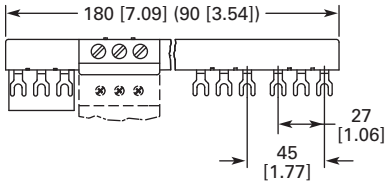

Three-Phase Commoning Link—XTPAXCLKB5, XTPAXCLKB4, XTPAXCLKB3 and XTPAXCLKB2

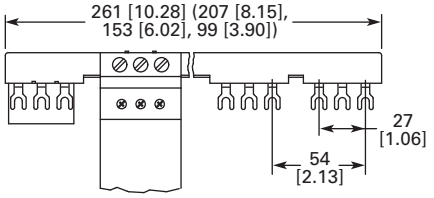

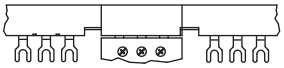

Overlapping Mounting to Extend the Three-Phase Commoning Link

Three-Phase Commoning Link—XTPAXCLKC4, XTPAXCLKC2

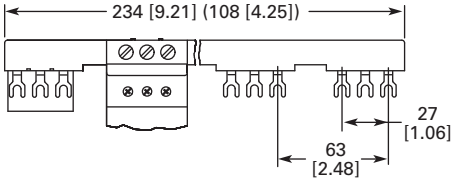

Incoming Terminal, Line Side Adapter—XTPAXIT, XTPAXLSA

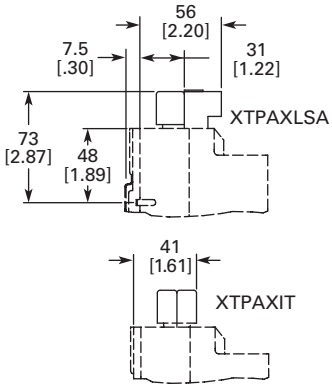

Approximate Dimensions in mm [in]

Three-Phase Commoning Link

XTPAXCLKA4D, XTPAXCLKA3D and XTPAXCLKA2D

XTPAXCLKA4D

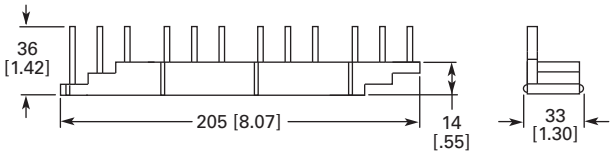

XTPAXCLKA3D

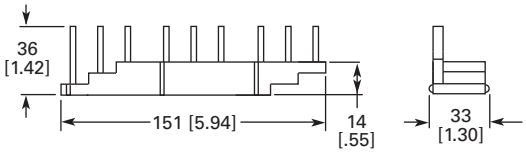

XTPAXCLKA2D

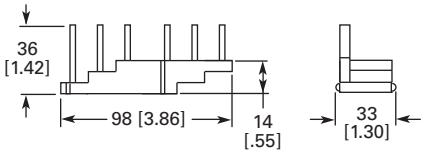

XTPAXCLKB4D, XTPAXCLKB3D and XTPAXCLKB2D

XTPAXCLKB4D

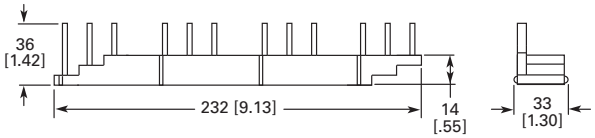

XTPAXCLKB3D

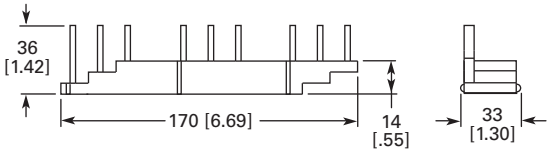

XTPAXCLKB2D

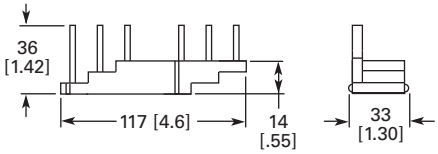

XTPAXCLKC4D and XTPAXCLKC2D

XTPAXCLKC4D

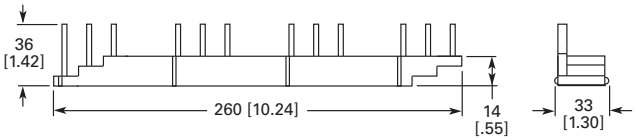

XTPAXCLKC2D

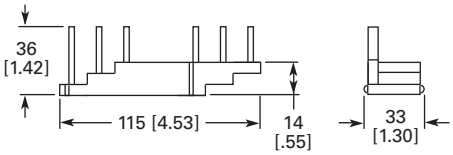

Approximate Dimensions in mm [in]

Insulated Enclosures for Surface Mounting of XTPB Manual Motor Protectors

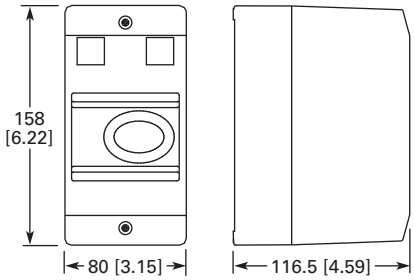

XTPBXENCS40, XTPBXENCS65, XTPBXENAS41, XTPBXENAS65

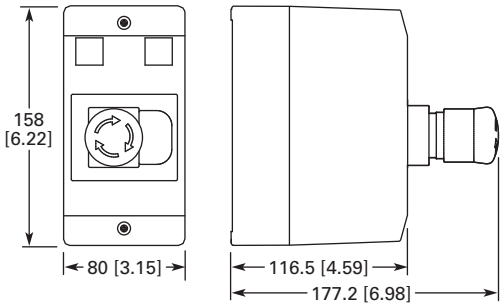

XTPBXENCSEK65, XTPBXENCSES65, XTPBXENASEK65, XTPBXENASES65

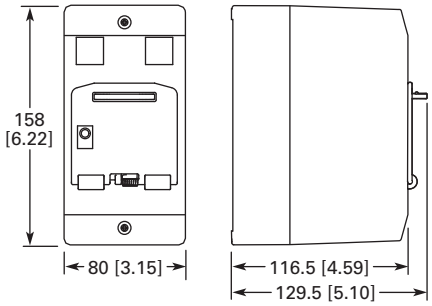

XTPBXENCSLE65, XTPBXENCSLO65, XTPBXENASLE65, XTPBXENASO065

Insulated Enclosures for Flush Mounting of XTPB Manual Motor Protectors

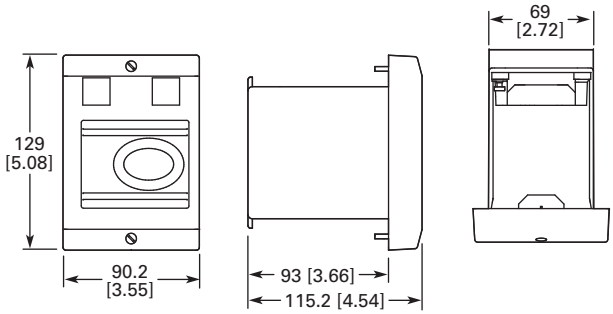

XTPBXENCF40, XTPBXENCF55

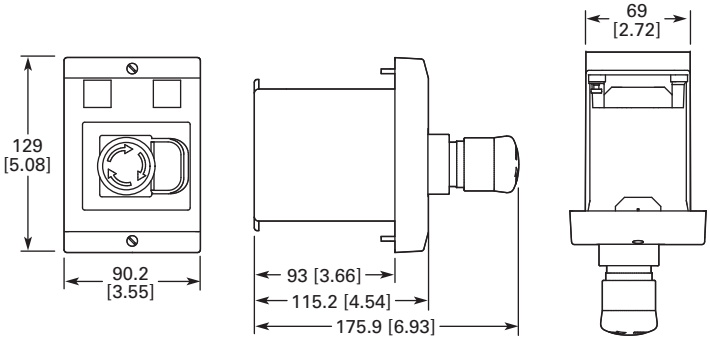

XTPBXENCFEK55, XTPBXENCFES55

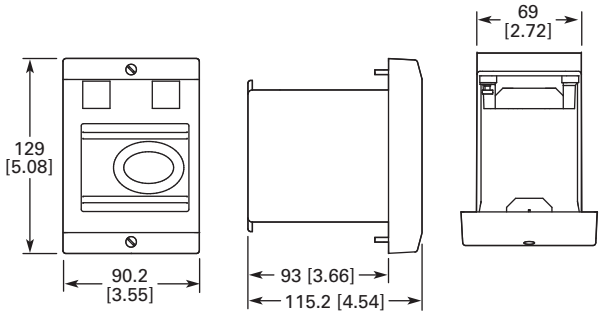

XTPBXENCFLE55, XTPBXENCFLO55

Approximate Dimensions in mm [in]

Insulated Enclosures for Surface Mounting of XTPR…B Manual Motor Protectors

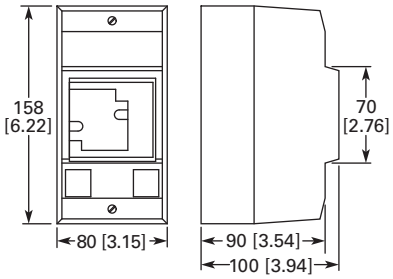

XTPAXENCS40

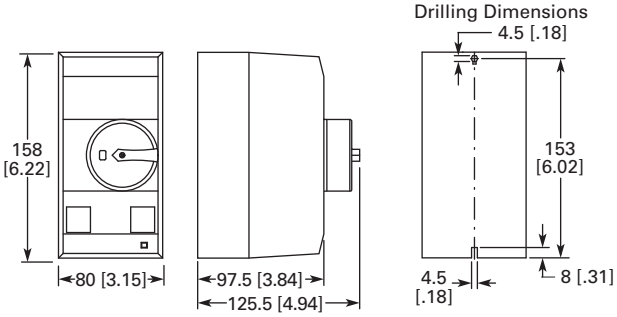

XTPAXENCS55B, XTPAXENCS55RY, XTPAXENCSEM55B, XTPAXENCSEM55RY

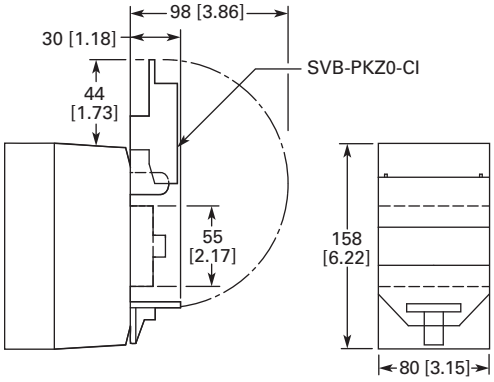

XTPAXENCS55_ + XTPAXPL1, XTPAXENCSEM55_ + XTPAXPL1

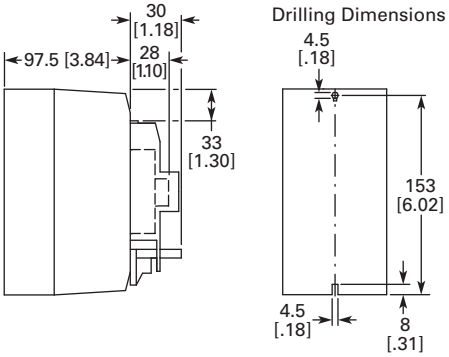

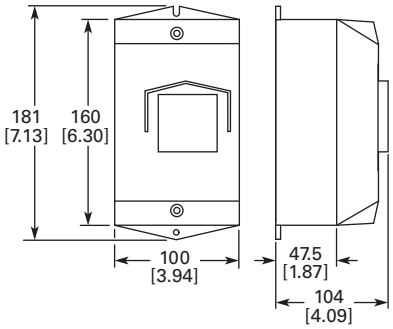

XTPAXENCSH41, XTPAXENCS41, XTPAXENAS41

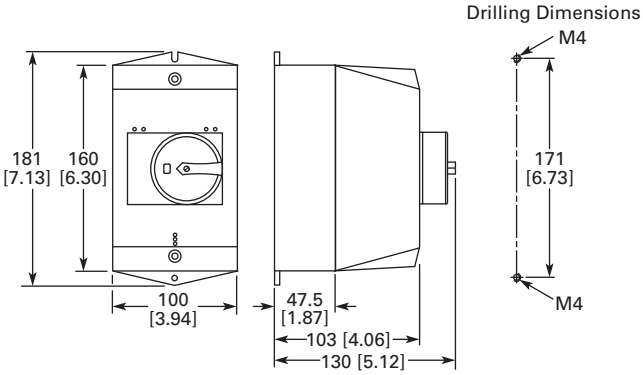

XTPAXENCS65B, XTPAXENCS65RY, XTPAXENCSEM65B, XTPAXENCSEM65RY, XTPAXENAS55B, XTPAXENAS55RY, XTPAXENASEM55B, XTPAXENASEM55RY, XTPAXENCSH65B, XTPAXENCSH65RY, XTPAXENCSEMH65B, XTPAXENCSEMH65RY

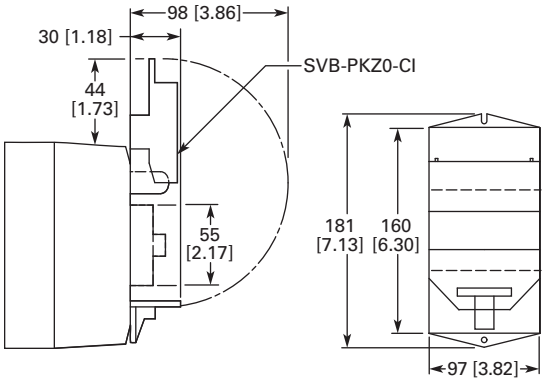

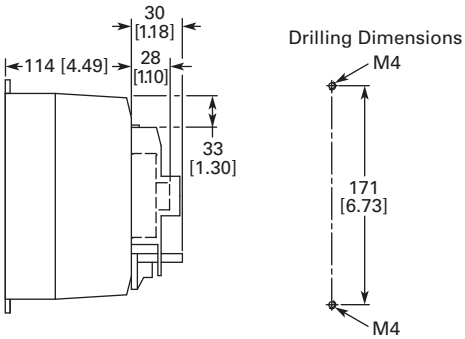

XTPAXENCS65_ + XTPAXPL1, XTPAXENCSEM65_ + XTPAXPL1

1

Approximate Dimensions in mm [in]

Insulated Enclosures for Flush Mounting of XTPR…B Manual Motor Protectors

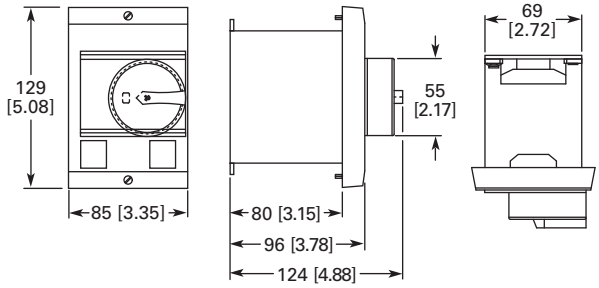

XTPAXENCF40, XTPAXENCF55B, XTPAXENCF55RY

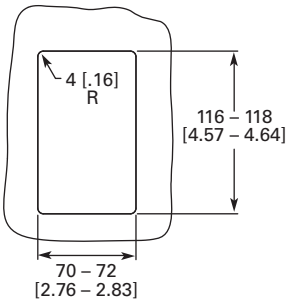

Mounting Cutout XTPAXENCF_

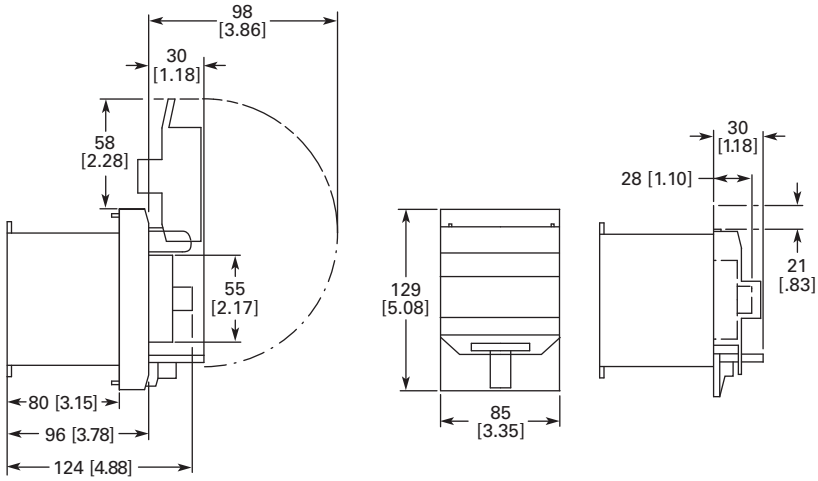

XTPAXENCF55_ + XTPAXPL3

Approximate Dimensions in mm [in]

Insulated Enclosures for Surface Mounting of XTPR...D Manual Motor Protectors

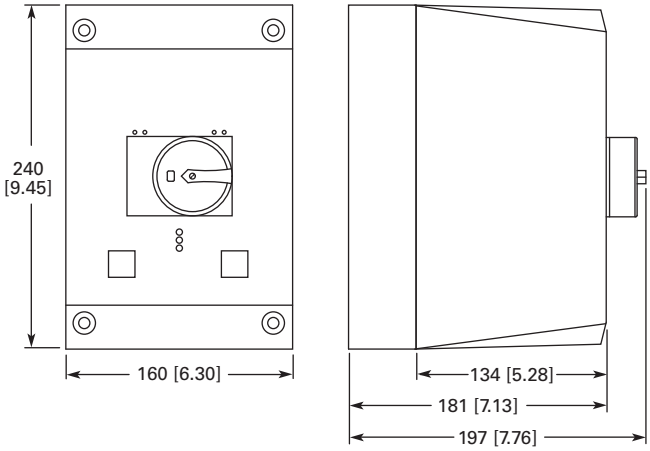

XTPAXENCSD65B, XTPAXENCSD65RY

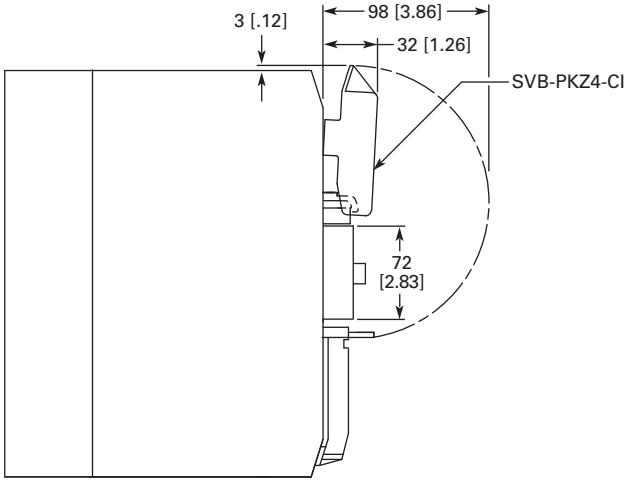

XTPAXENCSD65_ + XTPAXPL2

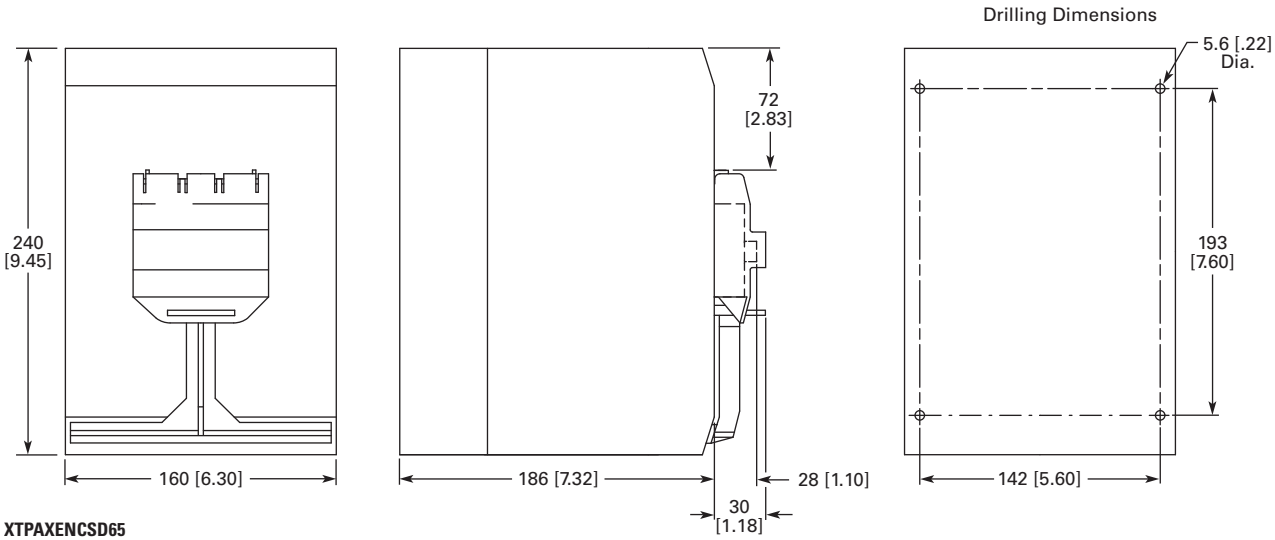

XTPAXENCSD65

Rotary Handle Mechanism—XTPAXRHM_

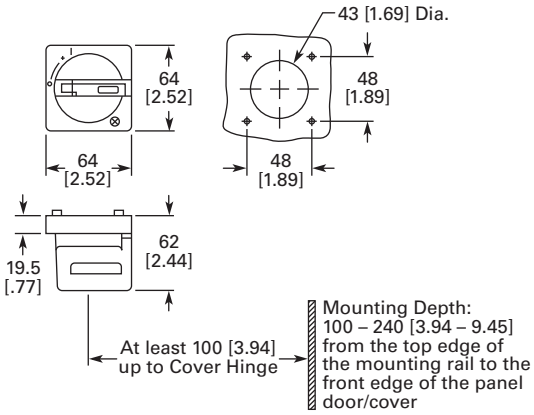

Approximate Dimensions in mm [in]

Pushbutton MMP Enclosures

Insulated Enclosures for Surface Mounting

XTPB Pushbutton Motor-Protective Circuit Breakers

Catalog Number	H x W x D
Global Usage	
XTPBXENCS40	158 x 80 x 116.5 [6.22 x 3.15 x 4.59]
XTPBXENCS65	158 x 80 x 116.5 [6.22 x 3.15 x 4.59]
XTPBXENCSLO65	158 x 80 x 129.5 [6.22 x 3.15 x 5.10]
XTPBXENCSLE65	158 x 80 x 129.5 [6.22 x 3.15 x 5.10]
XTPBXENCSES65	158 x 80 x 177.2 [6.22 x 3.15 x 6.98]
XTPBXENCSEK65	158 x 80 x 177.2 [6.22 x 3.15 x 6.98]

XTPB Pushbutton Manual Motor Protectors

Catalog Number	H x W x D
North American Usage	
XTPBXENAS41	158 x 80 x 116.5 [6.22 x 3.15 x 4.59]
XTPBXENAS65	158 x 80 x 116.5 [6.22 x 3.15 x 4.59]
XTPBXENASLO65	158 x 80 x 129.5 [6.22 x 3.15 x 5.10]
XTPBXENASLE65	158 x 80 x 129.5 [6.22 x 3.15 x 5.10]
XTPBXENASES65	158 x 80 x 177.2 [6.22 x 3.15 x 6.98]
XTPBXENASEK65	158 x 80 x 177.2 [6.22 x 3.15 x 6.98]

Frame B (0.1–32A) XTPR Motor-Protective Circuit Breakers

Catalog Number	H x W x D
Global Usage	
XTPAXENCS41	160 x 100 x 104 [6.30 x 3.94 x 4.09]
XTPAXENCS65B	160 x 100 x 130 [6.30 x 3.94 x 5.12]
XTPAXENCS65RY	160 x 100 x 130 [6.30 x 3.94 x 5.12]
XTPAXENCS40	158 x 80 x 100 [6.22 x 3.15 x 3.94]
XTPAXENCS55B	158 x 80 x 125.5 [6.22 x 3.15 x 4.94]
XTPAXENCS55RY	158 x 80 x 125.5 [6.22 x 3.15 x 4.94]

Frame B (0.1–32A) XTPR Rotary Manual Motor Protectors

Catalog Number	H x W x D
North American Usage	
XTPAXENAS55B	160 x 100 x 130 [6.30 x 3.94 x 5.12]
XTPAXENAS55RY	160 x 100 x 130 [6.30 x 3.94 x 5.12]

Frame B XTPR (0.1–32A) Rotary Motor-Protective Circuit Breakers with XTPAXFAEM20 Early-Make Front-Mount Auxiliary Contact

Catalog Number	H x W x D
Global Usage	
XTPAXENCSEM65B	160 x 100 x 130 [6.30 x 3.94 x 5.12]
XTPAXENCSEM65RY	160 x 100 x 130 [6.30 x 3.94 x 5.12]
XTPAXENCSEM55B	158 x 80 x 100 [6.22 x 3.15 x 3.94]
XTPAXENCSEM55RY	158 x 80 x 100 [6.22 x 3.15 x 3.94]

Frame B XTPR (0.1–32A) Rotary Manual Motor Protectors with XTPAXFAEM20 Early-Make Front-Mount Auxiliary Contact

Catalog Number	H x W x D
North American Usage	
XTPAXENCSEM55B	160 x 100 x 130 [6.30 x 3.94 x 5.12]
XTPAXENCSEM55RY	160 x 100 x 130 [6.30 x 3.94 x 5.12]

Frame D (10–65A) Rotary Motor-Protective Circuit Breakers

Catalog Number	H x W x D
Global and North American Usage	
XTPAXENCSD65B	240 x 160 x 197 [9.45 x 6.30 x 7.76]
XTPAXENCSD65RY	240 x 160 x 197 [9.45 x 6.30 x 7.76]

Insulated Enclosures for Flush Mounting

XTPB Pushbutton Manual Motor Protectors

Catalog Number	H x W x D
Global and North American Usage	
XTPBXENCF40	129 x 90.2 x 115.2 [5.08 x 3.55 x 4.54]
XTPBXENCF55	129 x 90.2 x 115.2 [5.08 x 3.55 x 4.54]
XTPBXENCFLO55	129 x 90.2 x 115.2 [5.08 x 3.55 x 4.54]
XTPBXENCFLE55	129 x 90.2 x 115.2 [5.08 x 3.55 x 4.54]
XTPBXENCFES55	129 x 90.2 x 175.9 [5.08 x 3.55 x 6.93]
XTPBXENCFEK55	129 x 90.2 x 175.9 [5.08 x 3.55 x 6.93]

Frame B (0.1–32A) XTPR Rotary Manual Motor Protectors

Catalog Number	H x W x D
Global Usage	
XTPAXENCF40	129 x 85 x 96 [5.08 x 3.35 x 3.78]
XTPAXENCF55B	129 x 85 x 124 [5.08 x 3.35 x 4.88]
XTPAXENCF55RY	129 x 85 x 124 [5.08 x 3.35 x 4.88]

Combination Motor Controllers

Contents

Description	*Page*
Relays and Timers	V5-T1-3
Miniature Controls	V5-T1-18
Contactors and Starters	V5-T1-35
Thermal Overload Relays	V5-T1-128
C440/*XT* Electronic Overload Relay	V5-T1-141
Manual Motor Protectors	V5-T1-157
Combination Motor Controllers	
Features	V5-T1-194
Standards and Certifications	V5-T1-194
Catalog Number Selection	V5-T1-195
Product Selection	V5-T1-195
Accessories	V5-T1-203
Technical Data and Specifications	V5-T1-205
Dimensions	V5-T1-211
An Eaton Green Solution	
XT Electronic Manual Motor Protector	V5-T1-216
EMS—Electronic Motor Starter	V5-T1-229
Reference Data	V5-T1-231

Combination Motor Controllers

Product Description

Eaton's ***XT*** IEC open non-reversing and reversing manual motor controllers combine a manual motor protector with an IEC contactor(s) to provide a complete motor protection solution by combining motor disconnect function, thermal overload protection, magnetic short-circuit protection and remote control operation in one compact, assembled unit. these assembled manual motor controllers cover motors with FLA ratings from 0.10A to 65A.

The UL 508 Type F labeled combination motor controller (CMC) includes a line side adapter (LSA). These assembled combination motor controllers cover motors with FLA ratings from 0.10A to 65A.

Application Description

The ***XT*** IEC non-reversing and reversing manual and combination motor controllers can be used in the following applications:

Group Motor Control

Manual motor controllers (MMCs) are ideal for group motor applications where an upstream breaker or fuse provides protection for two or more motors. ***XT*** manual motor controllers (MMC) combine a manual motor protector, a wiring connector link and IEC contactor.

Individual Branch Circuit for Motor Loads

Combination motor controller (CMC), consisting of a line side adapter, manual motor protector, wiring connector link and IEC contactor, provide an efficient means to build an entire branch circuit. The ***XT*** CMC is UL 508 Type F approved, meaning it is "self-protected" and doesn't require the use of an additional fuse or breaker for short circuit protection. This approval means CMC's can be used in place of a traditional fuse-starter and breaker-starter motor circuit.

Based around two key functional components (MMP and contactor), the CMC is a very cost effective means to build a branch circuit. Fuses and breakers must be oversized to prevent tripping during motor start up, and thus these oversized devices can no longer protect the motor. To compensate for this, a motor overload relay is necessary to protect the motor.

The manual motor protector was invented in Germany by Moeller to correct this inefficiency. The MMP operates similarly to a circuit breaker, except the inrush (magnetic) protection is set to 14 times the running current, thus accounting for motor start-up current without the necessity to oversize. A overcurrent dial was added to the face of the MMP to serve as the motor overload protection. This "motor protective circuit breaker", as it is referred to in Europe, now accomplishes all four key functions of a motor branch circuit: disconnect, short circuit, motor controller and motor overload protection. With the addition of a contactor, users have the ability to remotely control the starter device.

Whether a single motor application or a multiple motor application, CMC's are an ideal solution for machinery OEMs and panel builders.

Features

- ON/OFF rotary handle with lockout provision
- Visible trip indication
- Test trip function
- Motor applications from 0.10A to 65A
- Class 10 overload protection
- Built-in heater and magnetic trip elements to protect the motor
- Phase loss sensitivity
- Type 2 coordination
- Ambient compensated up to 55°C [140°F]
- Control inputs located at front of starter for easy access and wiring
- Wide range of coils
- DIN rail mount—XTSC…BB_
- Mounting plates—XTSC…BC_, XTSC…D motor controllers
- Adjustment dial for setting motor FLA
- Short-circuit trip at 14 times the maximum setting of the FLA adjustment dial
- UL 508 Type F CMC high fault short-circuit ratings
- 1NO-1NC auxiliary contact as standard on manual motor controller and combination motor controller

Standards and Certifications

UL 508 Type F combination motor controller

- IEC Type 2 Approved per IEC 60947-4-1
- UL Listed File No. E245398
- CE Mark

Note: For Type 2 Coordination of MMCs, see **Page V5-T1-232**. Protection in different controller types

MMC and CMC Applications

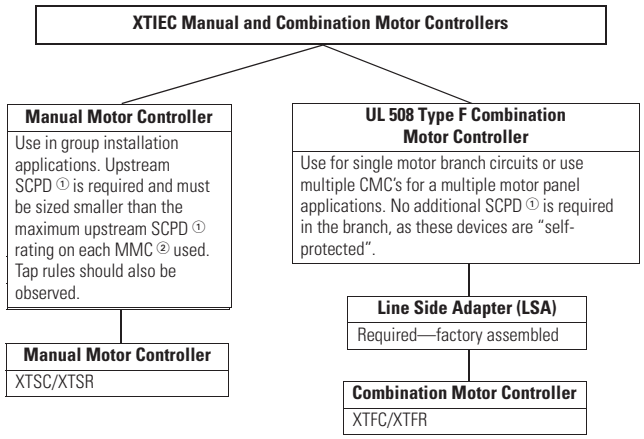

Notes

Technical Paper AP03402001E.

Line side adapters are not required for non-U.S. applications. Most countries outside of the U.S. classify the MMP as a motor-protective circuit breaker.

① SCPD = Short-circuit protective device (circuit breaker, fuses).
② MMC = Manual motor controller

Catalog Number Selection

Combination Motor Controllers

XT SC 012 B B A

Designation

XT	= ***XT*** IEC power control

Type

SC	= Manual motor controller—FVNR
SR	= Manual motor controller—FVR
FC	= Combination motor controller, UL 508 Type F—FVNR
FR	= Combination motor controller, UL 508 Type F—FVR

Rated Current of MMP

Frame B	Frame D
P16 = 0.16A	**016** = 16A
P25 = 0.25A	**025** = 25A
P40 = 0.40A	**032** = 32A
P63 = 0.63A	**040** = 40A
001 = 1A	**050** = 50A
1P6 = 1.6A	**058** = 58A
2P5 = 2.5A	**063** = 63A
004 = 4A	
6P3 = 6.3A	
010 = 10A	
012 = 12A	
016 = 16A	
020 = 20A	
025 = 25A	
032 = 32A	

Frame Size—MMP

B	= 45 mm, 0.1 to 32A
D	= 55 mm, 16 to 63A

Frame Size—Contactor

B	= 45 mm, 7 to 15A
C	= 45 mm, 18 to 32A
D	= 55 mm, 40 to 65A

Coil Voltage

A	= 110V 50 Hz, 120V 60 Hz
B	= 220V 50 Hz, 240V 60 Hz
C	= 415V 50 Hz, 480V 60 Hz
D	= 600V 60 Hz
E	= 208V 50 Hz
F	= 230V 50 Hz
G	= 190V 50 Hz, 220V 60 Hz
H	= 240V 50 Hz, 277V 60 Hz
L	= 380V 50 Hz, 440V 60 Hz
N	= 400V 50 Hz
P	= 380V 60 Hz
R	= 12V 50/60 Hz
T	= 24V 50/60 Hz
W	= 42V 50 Hz, 48V 60 Hz
Y	= 48V 50 Hz
AD	= 120 Vdc
BD	= 220 Vdc
RD	= 12 Vdc
TD	= 24 Vdc
WD	= 48 Vdc

Product Selection

XTSC and XTSR Manual Motor Controllers (MMC)/Starter Combinations

Frame B MMP + Frame B Contactor

Factory-Assembled Manual Motor Controller—Frame B MMP + Frame B Contactor—Maximum UL Ratings ①

FLA Adjustment Range/Overload Release—I_r (Amps)	Short-Circuit Release—I_{rm} (Amps)	Three-Phase 200V	Three-Phase 240V	Three-Phase 480V	Three-Phase 600V	Assembled Manual Motor Controller ② Non-Reversing Catalog Number	Assembled Manual Motor Controller ② Reversing Catalog Number
0.1–0.16	3.2	③	③	1/2	1/2	**XTSCP16BB_**	**XTSRP16BB_**
0.16–0.25	3.5	③	③	1/2	1/2	**XTSCP25BB_**	**XTSRP25BB_**
0.25–0.4	5.6	③	③	1/2	1/2	**XTSCP40BB_**	**XTSRP40BB_**
0.4–0.63	8.82	③	③	1/2	1/2	**XTSCP63BB_**	**XTSRP63BB_**
0.63–1	14	③	③	1/2	1/2	**XTSC001BB_**	**XTSR001BB_**
1–1.6	22.4	③	③	3/4	1	**XTSC1P6BB_**	**XTSR1P6BB_**
1.6–2.5	35	1/2	1/2	1	1-1/2	**XTSC2P5BB_**	**XTSR2P5BB_**
2.5–4	56	1	1	2	3	**XTSC004BB_**	**XTSR004BB_**
4–6.3	88.2	1-1/2	1-1/2	3	5	**XTSC6P3BB_**	**XTSR6P3BB_**
6.3–10	140	3	3	7-1/2	7.5	**XTSC010BB_**	**XTSR010BB_**
8–12	168	3	3	7-1/2	7.5	**XTSC012BB_**	**XTSR012BB_**
10–16	224	3	3	10	7.5	**XTSC016BB_**	—

Notes

① Select manual motor controllers by full load amperes. Maximum motor ratings (kW, hp) are for reference only.
② Underscore (_) indicates magnetic coil suffix required. See **Page V5-T1-198**.
③ In this range, calculate motor rating according to rated current. Specified values to NEC 430.6(A)(1).

Frame B MMP + Frame B Contactor

Factory-Assembled Motor Protective Device with Thermal and Magnetic Trip + Contactor—Maximum IEC Ratings①

FLA Adjustment Range/Overload Release—I_r (Amps)	Short-Circuit Release—I_{rm} (Amps)	Three-Phase 220–240V	380–415V	500V	660–690V	Assembled Manual Motor Controller ② Non-Reversing Catalog Number	Reversing Catalog Number
0.1–0.16	3.2	—	—	—	0.06	**XTSCP16BB_**	**XTSRP16BB_**
0.16–0.25	3.5	—	0.06	0.06	0.12	**XTSCP25BB_**	**XTSRP25BB_**
0.25–0.4	5.6	0.06	0.09	0.12	0.18	**XTSCP40BB_**	**XTSRP40BB_**
0.4–0.63	8.82	0.09	0.18	0.25	0.25	**XTSCP63BB_**	**XTSRP63BB_**
0.63–1	14	0.12	0.25	0.37	0.55	**XTSC001BB_**	**XTSR001BB_**
1–1.6	22.4	0.25	0.55	0.75	1.1	**XTSC1P6BB_**	**XTSR1P6BB_**
1.6–2.5	35	0.37	0.75	1.1	1.5	**XTSC2P5BB_**	**XTSR2P5BB_**
2.5–4	56	0.75	1.5	2.2	3	**XTSC004BB_**	**XTSR004BB_**
4–6.3	88.2	1.1	2.2	3	4	**XTSC6P3BB_**	**XTSR6P3BB_**
6.3–10	140	2.2	4	4	7.5	**XTSC010BB_**	**XTSR010BB_**
8–12	168	3	5.5	5.5	11	**XTSC012BB_**	**XTSR012BB_**
10–16	224	4	7.5	9	12.5	**XTSC016BB_**	—

Frame B MMP + Frame C Contactor

Factory-Assembled Manual Motor Controller—Frame B MMP + Frame C Contactor—Maximum UL Ratings ①

FLA Adjustment Range/Overload Release—I_r (Amps)	Short-Circuit Release—I_{rm} (Amps)	Three-Phase 200V	240V	480V	600V	Assembled Manual Motor Controller ② Non-Reversing Catalog Number	Reversing Catalog Number
10–16	224	3	3	10	10	**XTSC016BC_**	**XTSR016BC_**
16–20	280	5	5	10	15	**XTSC020BC_**	**XTSR020BC_**
20–25	350	5	7-1/2	15	20	**XTSC025BC_**	**XTSR025BC_**
25–32	448	7-1/2	10	20	25	**XTSC032BC_**	**XTSR032BC_**

Frame B MMP + Frame C Contactor

Factory-Assembled Manual Motor Controller—Frame B MMP + Frame C Contactor—Maximum IEC RatingS ①

FLA Adjustment Range/Overload Release—I_r (Amps)	Short-Circuit Release—I_{rm} (Amps)	Three-Phase 220–240V	380–415V	500V	660–690V	Assembled Manual Motor Controller ② Non-Reversing Catalog Number	Reversing Catalog Number
10–16	224	4	7.5	9	12.5	**XTSC016BC_**	**XTSR016BC_**
16–20	280	5.5	9	12.5	15	**XTSC020BC_**	**XTSR020BC_**
20–25	350	5.5	11	15	22	**XTSC025BC_**	**XTSR025BC_**
25–32	448	7.5	15	22	30	**XTSC032BC_**	**XTSR032BC_**

Notes

① Select manual motor controllers by full load amperes. Maximum motor ratings (kW, hp) are for reference only.

② Underscore (_) indicates magnetic coil suffix required. See **Page V5-T1-198**.

Frame D MMP + Frame C Contactor

Factory-Assembled Manual Motor Controller—Frame D MMP + Frame C Contactor—Maximum UL Ratings ①

FLA Adjustment Range/Overload Release—I_r (Amps)	Short-Circuit Release—I_{rm} (Amps)	Three-Phase 200V	240V	480V	600V	Assembled Manual Motor Controller ② Non-Reversing Catalog Number	Reversing Catalog Number
10–16	224	3	5	10	15	**XTSC016DC_**	**XTSR016DC_**
16–25	350	5	7-1/2	15	20	**XTSC025DC_**	**XTSR025DC_**
25–32	448	7-1/2	10	20	30	**XTSC032DC_**	**XTSR032DC_**

Frame D MMP + Frame C Contactor

Factory-Assembled Manual Motor Controller—Frame D MMP + Frame C Contactor—Maximum IEC Ratings ①

FLA Adjustment Range/Overload Release—I_r (Amps)	Short-Circuit Release—I_{rm} (Amps)	Three-Phase 220–240V	380–415V	500V	660–690V	Assembled Manual Motor Controller ② Non-Reversing Catalog Number	Reversing Catalog Number
10–16	224	4	7.5	9	12.5	**XTSC016DC_**	**XTSR016DC_**
16–25	350	5.5	12.5	12.5	22	**XTSC025DC_**	**XTSR025DC_**
25–32	448	7.5	15	17.5	22	**XTSC032DC_**	**XTSR032DC_**

Frame D MMP + Frame D Contactor

Factory-Assembled Manual Motor Controller—Frame D MMP + Frame D Contactor—Maximum UL Ratings ①

FLA Adjustment Range/Overload Release—I_r (Amps)	Short-Circuit Release—I_{rm} (Amps)	Three-Phase 200V	240V	480V	600V	Assembled Manual Motor Controller ② Non-Reversing Catalog Number	Reversing Catalog Number
32–40	560	10	15	30	30	**XTSC040DD_**	**XTSR040DD_**
40–50	700	15	15	30	—	**XTSC050DD_**	**XTSR050DD_**
50–58	812	15	15	40	—	**XTSC058DD_**	**XTSR058DD_**
55–65	882	15	15	40	—	**XTSC063DD_**	**XTSR063DD_**

Notes

① Select manual motor controllers by full load amperes. Maximum motor ratings (kW, hp) are for reference only.

② Underscore (_) indicates magnetic coil suffix required. See **Page V5-T1-198**.

1

Frame D MMP + Frame D Contactor

Factory-Assembled Manual Motor Controller—Frame D MMP + Frame D Contactor—Maximum IEC Ratings ①

FLA Adjustment Range/Overload Release—I_r (Amps)	Short-Circuit Release—I_{rm} (Amps)	Three-Phase 220–240V	380–415V	500V	660–690V	Assembled Manual Motor Controller ② Non-Reversing Catalog Number	Reversing Catalog Number
32–40	560	11	20	22	30	**XTSC040DD_**	**XTSR040DD_**
40–50	700	14	25	30	45	**XTSC050DD_**	**XTSR050DD_**
50–58	812	17	30	37	55	**XTSC058DD_**	**XTSR058DD_**
55–65	882	18.5	34	37	55	**XTSC063DD_**	**XTSR063DD_**

AC and DC Coil Suffixes

Coil Voltage	Suffix Code	Coil Voltage	Suffix Code	Coil Voltage	Suffix Code	Coil Voltage	Suffix Code
Frame B Contactors				**Frame C and D Contactors**			
110V 50 Hz, 120V 60 Hz	**A**	380V 50 Hz, 440V 60 Hz	**L**	110V 50 Hz, 120V 60 Hz	**A**	380V 50 Hz, 440V 60 Hz	**L**
220V 50 Hz, 240V 60 Hz	**B**	400V 50 Hz	**N**	220V 50 Hz, 240V 60 Hz	**B**	400V 50 Hz	**N**
230V 50 Hz	**F**	380V 60 Hz	**P**	230V 50 Hz	**F**	380V 60 Hz	**P**
24V 50/60 Hz	**T**	12V 50/60 Hz	**R**	24V 50/60 Hz	**T**	12V 50/60 Hz	**R**
24 Vdc	**TD** ③	42V 50 Hz, 48V 60 Hz	**W**	24–27 Vdc	**TD** ③	42V 50 Hz, 48V 60 Hz	**W**
415V 50 Hz, 480V 60 Hz	**C**	48V 50 Hz	**Y**	415V 50 Hz, 480V 60 Hz	**C**	48V 50 Hz	**Y**
600V 60 Hz	**D**	120 Vdc	**AD** ③	550V 50 Hz, 600V 60 Hz	**D**	110–130 Vdc	**AD** ③
208V 60 Hz	**E**	220 Vdc	**BD** ③	208V 60 Hz	**E**	200–240 Vdc	**BD** ③
190V 50 Hz, 220V 60 Hz	**G**	12 Vdc	**RD** ③	190V 50 Hz, 220V 60 Hz	**G**	12–14 Vdc	**RD** ③
240V 50 Hz, 277V 60 Hz	**H**	48 Vdc	**WD** ③	240V 50 Hz, 277V 60 Hz	**H**	48–60 Vdc	**WD** ③

Notes

The assembled manual motor controller (MMC) consists of an XTPR manual motor protector (MMP) and an XTCE contactor. For Frame B MMP + Frame B contactor assemblies, the XTSC and XTSR can be mounted directly on DIN rail without an adapter. The contactors are supported mechanically with a mechanical connection element (included in XTPAXTPCB, XTPAXRPCRB). For MMCs using a Frame C or Frame D contactor, the assembly is mounted via a DIN rail adapter plate (XTPAXTPCPC, XTPAXTPCPD) and the electrical connection is made with electrical contact modules (XTPAXECMC, XTPAXECMD), both included in XTPAXTPCC and XTPAXTPCD.

Service Factor (SF)—Setting Ir of current scale in dependence of load factor:

$SF = 1.15 \rightarrow I_r = 1 \times I_{n\ mot}$

$SF = 1 \rightarrow I_r = 0.9 \times I_{n\ mot}$

Single-phasing sensitivity to IEC/EN 60947-4-1, VDE 0660 Part 102.

① Select manual motor controllers by full load amperes. Maximum motor ratings (kW, hp) are for reference only.

② Underscore (_) indicates magnetic coil suffix required. See AC and DC coil suffixes above.

③ With DC operation: Integrated diode-resistor combination, coil rating 2.6W.

Non-Reversing Manual Motor Controller Power Circuit

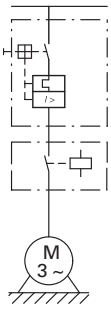

Reversing Manual Motor Controller Power Circuit

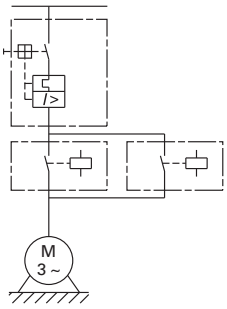

XTFC and XTFR Combination Motor Controllers (CMC), UL 508 Type F

Frame B MMP + Two Frame B Contactors

Factory-Assembled Type F Combination Motor Controller—Frame B MMP + Frame B Contactor—Maximum UL Ratings ①

FLA Adjustment Range/Overload Release—I_r (Amps)	Short-Circuit Release—I_{rm} (Amps)	Three-Phase 200V	240V	480V	600V	Assembled Manual Motor Controller ② Non-Reversing Catalog Number	Reversing Catalog Number
0.16–0.25	3.5	③	③	1/2	1/2	XTFCP25BB_	XTFRP25BB_
0.25–0.4	5.6	③	③	1/2	1/2	XTFCP40BB_	XTFRP40BB_
0.4–0.63	8.82	③	③	1/2	1/2	XTFCP63BB_	XTFRP63BB_
0.63–1	14	③	③	1/2	1/2	XTFC001BB_	XTFR001BB_
1–1.6	22.4	③	③	3/4	1	XTFC1P6BB_	XTFR1P6BB_
1.6–2.5	35	1/2	1/2	1	1-1/2	XTFC2P5BB_	XTFR2P5BB_
2.5–4	56	1	1	2	3	XTFC004BB_	XTFR004BB_
4–6.3	88.2	1-1/2	1-1/2	3	5	XTFC6P3BB_	XTFR6P3BB_
6.3–10	140	3	3	7-1/2	7.5	XTFC010BB_	XTFR010BB_
8–12	168	3	3	7-1/2	—	XTFC012BB_	XTFR012BB_
10–16	224	3	5	10	—	XTFC016BB_	—

Factory-Assembled Type F Combination Motor Controller—Frame B MMP + Frame B Contactor—Maximum IEC Ratings ①

FLA Adjustment Range/Overload Release—I_r (Amps)	Short-Circuit Release—I_{rm} (Amps)	Three-Phase 220–240V	380–415V	500V	660–690V	Assembled Manual Motor Controller ② Non-Reversing Catalog Number	Reversing Catalog Number
0.1–0.16	2.2	—	—	—	0.06	XTFCP16BB_	XTFRP16BB_
0.16–0.25	3.5	—	0.06	0.06	0.12	XTFCP25BB_	XTFRP25BB_
0.25–0.4	5.6	0.06	0.09	0.12	0.18	XTFCP40BB_	XTFRP40BB_
0.4–0.63	8.82	0.09	0.18	0.25	0.25	XTFCP63BB_	XTFRP63BB_
0.63–1	14	0.12	0.25	0.37	0.55	XTFC001BB_	XTFR001BB_
1–1.6	22.4	0.25	0.55	0.75	1.1	XTFC1P6BB_	XTFR1P6BB_
1.6–2.5	35	0.37	0.75	1.1	1.5	XTFC2P5BB_	XTFR2P5BB_
2.5–4	56	0.75	1.5	2.2	3	XTFC004BB_	XTFR004BB_
4–6.3	88.2	1.1	2.2	3	4	XTFC6P3BB_	XTFR6P3BB_
6.3–10	140	2.2	4	4	7.5	XTFC010BB_	XTFR010BB_
8–12	168	3	5.5	5.5	11	XTFC012BB_	XTFR012BB_
10–16	224	4	7.5	9	12.5	XTFC016BB_	—

Notes

① Select combination motor controllers by full load amperes. Maximum motor ratings (kW, hp) are for reference only.

② Underscore (_) indicates magnetic coil suffix required. See **Page V5-T1-202**.

③ In this range, calculate motor rating according to rated current. Specified values to NEC 430.6(A)(1).

Factory-Assembled Type F Combination Motor Controller—Frame B MMP + Frame C Contactor—Maximum UL Ratings ①

FLA Adjustment Range/Overload Release—I_r (Amps)	Short-Circuit Release—I_{rm} (Amps)	Three-Phase 200V	240V	480V	600V	Assembled Manual Motor Controller ② Non-Reversing Catalog Number	Reversing Catalog Number
10–16	224	3	5	10	—	**XTFC016BC_**	**XTFR016BC_**
16–20	280	5	5	—	—	**XTFC020BC_**	**XTFR020BC_**
20–25	350	5	7-1/2	15	—	**XTFC025BC_**	**XTFR025BC_**
25–32	448	7-1/2	10	20	—	**XTFC032BC_**	**XTFR032BC_**

Factory-Assembled Type F Combination Motor Controller—Frame B MMP + Frame C Contactor—Maximum IEC Ratings ①

FLA Adjustment Range/Overload Release—I_r (Amps)	Short-Circuit Release—I_{rm} (Amps)	Three-Phase 220–240V	380–415V	500V	660–690V	Assembled Manual Motor Controller ② Non-Reversing Catalog Number	Reversing Catalog Number
10–16	224	4	7.5	9	12.5	**XTFC016BC_**	**XTFR016BC_**
16–20	280	5.5	9	12.5	15	**XTFC020BC_**	**XTFR020BC_**
20–25	350	5.5	11	15	22	**XTFC025BC_**	**XTFR025BC_**
25–32	448	7.5	15	22	30	**XTFC032BC_**	**XTFR032BC_**

Notes

① Select combination motor controllers by full load amperes. Maximum motor ratings (kW, hp) are for reference only.

② Underscore (_) indicates magnetic coil suffix required. See **Page V5-T1-202**.

Factory-Assembled Type F Combination Motor Controller—Frame D MMP + Frame C Contactor—Maximum UL Ratings ①

FLA Adjustment Range/Overload Release—I_r (Amps)	Short-Circuit Release—I_{rm} (Amps)	Three-Phase 200V	240V	480V	600V	Assembled Manual Motor Controller ② Non-Reversing Catalog Number	Reversing Catalog Number
10–16	224	3	5	10	10	**XTFC016DC_**	**XTFR016DC_**
16–25	350	5	7-1/2	15	20	**XTFC025DC_**	**XTFR025DC_**
25–32	448	7-1/2	10	25	30	**XTFC032DC_**	**XTFR032DC_**

Factory-Assembled Type F Combination Motor Controller—Frame D MMP + Frame C Contactor—Maximum IEC Ratings ①

FLA Adjustment Range/Overload Release—I_r (Amps)	Short-Circuit Release—I_{rm} (Amps)	Three-Phase 220–240V	380–415V	500V	660–690V	Assembled Manual Motor Controller ② Non-Reversing Catalog Number	Reversing Catalog Number
10–16	224	4	7.5	9	12.5	**XTFC016DC_**	**XTFR016DC_**
16–25	350	5.5	12.5	12.5	22	**XTFC025DC_**	**XTFR025DC_**
25–32	448	7.5	15	17.5	22	**XTFC032DC_**	**XTFR032DC_**

Factory-Assembled Type F Combination Motor Controller—Frame D MMP + Frame D Contactor—Maximum UL Ratings ①

FLA Adjustment Range/Overload Release—I_r (Amps)	Short-Circuit Release—I_{rm} (Amps)	Three-Phase 200V	240V	480V	600V	Assembled Manual Motor Controller ② Non-Reversing Catalog Number	Reversing Catalog Number
32–40	560	10	15	30	30	**XTFC040DD_**	**XTFR040DD_**
40–50	700	10	15	30	—	**XTFC050DD_**	**XTFR050DD_**
50–58	812	15	15	40	—	**XTFC058DD_**	**XTFR058DD_**
55–65	882	15	15	40	—	**XTFC063DD_**	**XTFR063DD_**

Notes

① Select combination motor controllers by full load amperes. Maximum motor ratings (kW, hp) are for reference only.

② Underscore (_) indicates magnetic coil suffix required. See **Page V5-T1-202**.

Factory-Assembled Type F Combination Motor Controller—Frame D MMP + Frame D Contactor—Maximum IEC Ratings ①

FLA Adjustment Range/Overload Release—I_r (Amps)	Short-Circuit Release—I_{rm} (Amps)	Three-Phase 220–240V	380–415V	500V	660–690V	Assembled Manual Motor Controller ② Non-Reversing Catalog Number	Reversing Catalog Number
32–40	560	11	20	22	30	**XTFC040DD_**	**XTFR040DD_**
40–50	700	14	25	30	45	**XTFC050DD_**	**XTFR050DD_**
50–58	812	17	30	37	55	**XTFC058DD_**	**XTFR058DD_**
55–65	882	18.5	34	37	55	**XTFC063DD_**	**XTFR063DD_**

AC and DC Coil Suffixes

Coil Voltage	Suffix Code	Coil Voltage	Suffix Code	Coil Voltage	Suffix Code	Coil Voltage	Suffix Code
Frame B Contactors				**Frame C and D Contactors**			
110V 50 Hz, 120V 60 Hz	**A**	380V 50 Hz, 440V 60 Hz	**L**	110V 50 Hz, 120V 60 Hz	**A**	380V 50 Hz, 440V 60 Hz	**L**
220V 50 Hz, 240V 60 Hz	**B**	400V 50 Hz	**N**	220V 50 Hz, 240V 60 Hz	**B**	400V 50 Hz	**N**
230V 50 Hz	**F**	380V 60 Hz	**P**	230V 50 Hz	**F**	380V 60 Hz	**P**
24V 50/60 Hz	**T**	12V 50/60 Hz	**R**	24V 50/60 Hz	**T**	12V 50/60 Hz	**R**
24 Vdc	**TD** ③	42V 50 Hz, 48V 60 Hz	**W**	24–27 Vdc	**TD** ③	42V 50 Hz, 48V 60 Hz	**W**
415V 50 Hz, 480V 60 Hz	**C**	48V 50 Hz	**Y**	415V 50 Hz, 480V 60 Hz	**C**	48V 50 Hz	**Y**
600V 60 Hz	**D**	120 Vdc	**AD** ③	550V 50 Hz, 600V 60 Hz	**D**	110–130 Vdc	**AD** ③
208V 60 Hz	**E**	220 Vdc	**BD** ③	208V 60 Hz	**E**	200–240 Vdc	**BD** ③
190V 50 Hz, 220V 60 Hz	**G**	12 Vdc	**RD** ③	190V 50 Hz, 220V 60 Hz	**G**	12–14 Vdc	**RD** ③
240V 50 Hz, 277V 60 Hz	**H**	48 Vdc	**WD** ③	240V 50 Hz, 277V 60 Hz	**H**	48–60 Vdc	**WD** ③

Notes

The assembled manual motor controller (MMC) consists of an XTPR manual motor protector (MMP) and an XTCE contactor. For Frame B MMP + Frame B contactor assemblies, the XTSC and XTSR can be mounted directly on DIN rail without an adapter. The contactors are supported mechanically with a mechanical connection element (included in XTPAXTPCB, XTPAXRPCRB). For 16A and above, the assembly is mounted via a DIN rail adapter plate (XTPAXTPCPC, XTPAXTPCPD) and the electrical connection is made with electrical contact modules (XTPAXECMC, XTPAXECMD), both included in XTPAXTPCC and XTPAXTPCD.

Service Factor (SF)—Setting I_r of current scale in dependence of load factor:

$SF = 1.15 \rightarrow I_r = 1 \times I_{n\ mot}$

$SF = 1 \rightarrow I_r = 0.9 \times I_{n\ mot}$

Single-phasing sensitivity to IEC/EN 60947-4-1, VDE 0660 Part 102.

① Select combination motor controllers by full load amperes. Maximum motor ratings (kW, hp) are for reference only.

② Underscore (_) indicates magnetic coil suffix required. See AC and DC coil suffixes above.

③ With DC operation: Integrated diode-resistor combination, coil rating 2.6W.

XTFC Manual Motor Controller

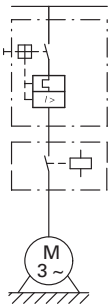

XTFR Manual Motor Controller

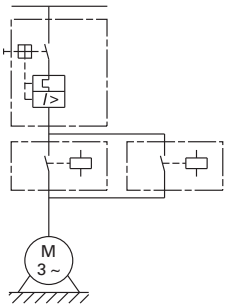

Accessories

Line Side Adapters

Line side adapters are required for use with XTPR MMPs only when used as Type E self-protected manual combination starters or as part of XTFC or XTFR Type F combination motor controllers. Not required for group installation.

Line Side Adapters

	Description	Catalog Number
XTPAXLSA	For use with Frame B MMPs (up to 32A)	**XTPAXLSA**
XTPAXLSAD	For use with Frame D MMPs (up to 40A)	**XTPAXLSAD**

Combination Connection Kits

Combination connection kits include the necessary components to field assemble a manual motor controller with an MMP (XTPR) and contactor (XTCE).

Non-Reversing Starters

	For Use with …	Description/Composed of …	Std. Pack ①	Catalog Number
XTPAXTPCB 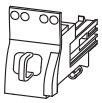	XTPR…B + XTCE…B	Mechanical connection element for XTPR…B and contactor	1	**XTPAXTPCB**
		Main current wiring between XTPR…B and contactor in toolless plug connection	1	
		Cable guidance	1	
		Use as contactor auxiliary switch XTCEXFAT_. Control cable guidance: max. six cables up to 2.5 mm^2 external diameter or four cables up to 3.5 mm^2 external diameter		
XTPAXEMCB 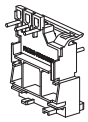	XTPR…B + XTCE…B	Mechanical connection element for XTPR…B and contactor	1	**XTPAXEMCB**
		Main current wiring between XTPR…B and contactor screw in type connection	1	
XTPAXTPCC and XTPAXTPCD 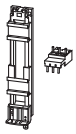	XTPR…B + XTCE…C	DIN rail adapter plate	1	**XTPAXTPCC**
	XTPR…D + XTCE…D	Main current wiring between XTPR and contactor	1	**XTPAXTPCD**

Reversing Starters

	For Use with …	Description/Composed of …	Std. Pack ①	Catalog Number
XTPAXTPCRB 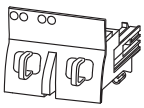	XTPR…B + XTCE…B01_	Mechanical connection element for XTPR…B and contactor	1	**XTPAXTPCRB**
		Reversing starter main current wiring in toolless plug connection	1	
		Control cables for electrical interlocking in toolless plug connection— K1M: A1–K2M: 21, K1M: 21–K2M: A1, K1M: A2–K2M: A2	1	
		Cable guidance	1	
		Use as contactor auxiliary switch XTCEXFAT_. Control cable guidance: max. six cables up to 2.5 mm^2 external diameter or four cables up to 3.5 mm^2 external diameter.		
XTPAXTPCRC 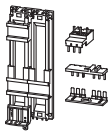	XTPR…B + XTCE…C	DIN rail adapter plate	1	**XTPAXTPCRC**
		Reversing starter main current wiring	1	

Note

① Orders must be placed in multiples of package quantity listed.

XTPAXEC_

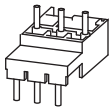

Electric Contact Module

For Use with …	Description/Composed of …	Std. Pack ①	Catalog Number
XTPR…B + XTCE…C	Main current wiring between XTPR…B and contactor	5	**XTPAXECMC**
	Use only in combination with busbar adapter		
XTPR…D + XTCE…D	Main current wiring between XTPR…D and contactor	5	**XTPAXECMD**
	Use only in combination with busbar adapter		

DIN Rail Adapter Plates

	For Use with …	Description/Composed of …	Std. Pack ①	Catalog Number
XTPAXTPCPB	XTPAXTPCB XTPAXTPCRB	45 mm wide adapter plate with one DIN rail	4	**XTPAXTPCPB**
		Connection element for side-by-side positioning of further plates		
XTPAXTPCRPB 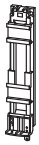	XTPR…B + XTCE…C XTPAXECMC	45 mm wide adapter plate with one DIN rail	4	**XTPAXTPCRPB**
		Connection element for side-by-side positioning of further plates		
XTPAXTPCPD	XTPAXECMD XTPR…D + XTCE…C XTPR…D + XTCE…D	55 mm wide adapter plate with two DIN rails	4	**XTPAXTPCPD**
		Connection cams for further plates	4	
		For use with reversing and star-delta starters		

Lateral Module

For Use with …	Description/Composed of …	Std. Pack ①	Catalog Number
—	Can be grouped on the DIN rail adapter	10	**XTPAXLM**
	Expansion of the mounting width by 9 mm		

Connection Element

For Use with …	Description/Composed of …	Std. Pack ①	Catalog Number
—	For connection of several DIN rail adapters	50	**XTPAXCNE**

Note

① Orders must be placed in multiples of package quantity listed.

Technical Data and Specifications

XTSC Non-Reversing Manual Motor Controllers (MMC)—Component Bill of Material

Factory Assembled Manual Motor Protector + Contactor

Assembled Manual Motor Controller ①	FLA Adjustment Range/Overload Release—I_r (Amps)	Component Catalog Numbers: Manual Motor Protector	Combination Connection Kit	Contactor ①	Manual Motor Protector Auxiliary Contact
XTSC Frame B MMP + Frame B Contactor					
XTSCP16BB_	0.1–0.16	XTPRP16BC1	XTPAXTPCB	XTCE007B10_	XTPAXFA11
XTSCP25BB_	0.16–0.25	XTPRP25BC1	XTPAXTPCB	XTCE007B10_	XTPAXFA11
XTSCP40BB_	0.25–0.4	XTPRP40BC1	XTPAXTPCB	XTCE007B10_	XTPAXFA11
XTSCP63BB_	0.4–0.63	XTPRP63BC1	XTPAXTPCB	XTCE007B10_	XTPAXFA11
XTSC001BB_	0.63–1	XTPR001BC1	XTPAXTPCB	XTCE007B10_	XTPAXFA11
XTSC1P6BB_	1–1.6	XTPR1P6BC1	XTPAXTPCB	XTCE007B10_	XTPAXFA11
XTSC2P5BB_	1.6–2.5	XTPR2P5BC1	XTPAXTPCB	XTCE007B10_	XTPAXFA11
XTSC004BB_	2.5–4	XTPR004BC1	XTPAXTPCB	XTCE007B10_	XTPAXFA11
XTSC6P3BB_	4–6.3	XTPR6P3BC1	XTPAXTPCB	XTCE007B10_	XTPAXFA11
XTSC010BB_	6.3–10	XTPR010BC1	XTPAXTPCB	XTCE009B10_	XTPAXFA11
XTSC012BB_	8–12	XTPR012BC1	XTPAXTPCB	XTCE012B10_	XTPAXFA11
XTSC016BB_	10–16	XTPR016BC1	XTPAXTPCB	XTCE015B10_	XTPAXFA11
XTSC Frame B MMP + Frame C Contactor					
XTSC016BC_	10–16	XTPR016BC1	XTPAXTPCC	XTCE018C10_	XTPAXFA1
XTSC020BC_	16–20	XTPR020BC1	XTPAXTPCC	XTCE025C10_	XTPAXFA11
XTSC025BC_	20–25	XTPR025BC1	XTPAXTPCC	XTCE025C10_	XTPAXFA11
XTSC032BC_	25–32	XTPR032BC1	XTPAXTPCC	XTCE032C10_	XTPAXFA11
XTSC Frame D MMP + Frame C Contactor					
XTSC016DC_	10–16	XTPR016DC1	②	XTCE018C10_	XTPAXFA1
XTSC025DC_	16–25	XTPR025DC1	②	XTCE025C10_	XTPAXFA11
XTSC032DC_	25–32	XTPR032DC1	②	XTCE032C10_	XTPAXFA11
XTSC Frame D MMP + Frame D Contactor					
XTSC040DD_	32–40	XTPR040DC1	XTPAXTPCD ③	XTCE040D00_	XTPAXFA11
XTSC050DD_	40–50	XTPR050DC1	XTPAXTPCD ③	XTCE050D00_	XTPAXFA11
XTSC058DD_	50–58	XTPR058DC1	XTPAXTPCD ③	XTCE065D00_	XTPAXFA11
XTSC063DD_	55–65	XTPR063DC1	XTPAXTPCD ③	XTCE065D00_	XTPAXFA11

Notes

① Underscore (_) indicates magnetic coil suffix required. See **Page V5-T1-202**.

② The connection between the XTPR…DC1 and the XTCE…C_ contactor will be made with flexible wire and mounted to the DIN rail adapter plate (XTPAXTPCPD).

③ The reversing connection between the XTPR…DC1 and the (2) XTCE…C_ contactors will be accomplished by using the non-reversing combination connection kit (XTPAXTPCD), Frame D reversing link kit (XTCEXRLD), additional DIN rail adapter plate (XTPAXTPCPD) and DIN adapter connection element (XTPAXCNE).

1

XTSR Reversing Manual Motor Controllers (MMC)—Component Bill of Material

Factory Assembled Manual Motor Protector + Contactor

Assembled Manual Motor Controller ①	FLA Adjustment Range/Overload Release—I_r (Amps)	Component Catalog Numbers Manual Motor Protector	Combination Connection Kit	Contactor ①	Manual Motor Protector Auxiliary Contact
XTSR Frame B MMP + Frame B Contactor					
XTSRP16BB_	0.1–0.16	XTPRP16BC1	XTPAXTPCRB	(2) XTCE007B01_	XTPAXFA11
XTSRP25BB_	0.16–0.25	XTPRP25BC1	XTPAXTPCRB	(2) XTCE007B01_	XTPAXFA11
XTSRP40BB_	0.25–0.4	XTPRP40BC1	XTPAXTPCRB	(2) XTCE007B01_	XTPAXFA11
XTSRP63BB_	0.4–0.63	XTPRP63BC1	XTPAXTPCRB	(2) XTCE007B01_	XTPAXFA11
XTSR001BB_	0.63–1	XTPR001BC1	XTPAXTPCRB	(2) XTCE007B01_	XTPAXFA11
XTSR1P6BB_	1–1.6	XTPR1P6BC1	XTPAXTPCRB	(2) XTCE007B01_	XTPAXFA11
XTSR2P5BB_	1.6–2.5	XTPR2P5BC1	XTPAXTPCRB	(2) XTCE007B01_	XTPAXFA11
XTSR004BB_	2.5–4	XTPR004BC1	XTPAXTPCRB	(2) XTCE007B01_	XTPAXFA11
XTSR6P3BB_	4–6.3	XTPR6P3BC1	XTPAXTPCRB	(2) XTCE007B01_	XTPAXFA11
XTSR010BB_	6.3–10	XTPR010BC1	XTPAXTPCRB	(2) XTCE009B01_	XTPAXFA11
XTSR012BB_	8–12	XTPR012BC1	XTPAXTPCRB	(2) XTCE012B01_	XTPAXFA11
XTSR Frame B MMP + Frame C Contactor					
XTSR016BC_	10–16	XTPR016BC1	XTPAXTPCRC	(2) XTCE018C01	XTPAXFA11
XTSR020BC_	16–20	XTPR020BC1	XTPAXTPCRC	(2) XTCE025C01_	XTPAXFA11
XTSR025BC_	20–25	XTPR025BC1	XTPAXTPCRC	(2) XTCE025C01_	XTPAXFA11
XTSR032BC_	25–32	XTPR032BC1	XTPAXTPCRC	(2) XTCE032C01_	XTPAXFA11
XTSR Frame D MMP + Frame C Contactor					
XTSR016DC_	10–16	XTPR016DC1	②	(2) XTCE018C01	XTPAXFA11
XTSR025DC_	16–25	XTPR025DC1	②	(2) XTCE025C01_	XTPAXFA11
XTSR032DC_	25–32	XTPR032DC1	②	(2) XTCE032C01_	XTPAXFA11
XTSR Frame D MMP + Frame D Contactor					
XTSR040DD_	32–40	XTPR040DC1	③	(2) XTCE040D00_	XTPAXFA11
XTSR050DD_	40–50	XTPR050DC1	③	(2) XTCE050D00_	XTPAXFA11
XTSR058DD_	50–58	XTPR058DC1	③	(2) XTCE065D00_	XTPAXFA11
XTSR063DD_	55–65	XTPR063DC1	③	(2) XTCE065D00_	XTPAXFA11

Notes

① Underscore (_) indicates magnetic coil suffix required. See **Page V5-T1-202**.

② The connection between the XTPR…DC1 and the XTCE…C_ contactor will be made with flexible wire and mounted to the DIN rail adapter plate (XTPAXTPCPD).

③ The reversing connection between the XTPR…DC1 and the (2) XTCE…C_ contactors will be accomplished by using the non-reversing combination connection kit (XTPAXTPCD), Frame D reversing link kit (XTCEXRLD), additional DIN rail adapter plate (XTPAXTPCPD) and DIN adapter connection element (XTPAXCNE).

XTFC Non-Reversing Combination Motor Controllers—Component Bill of Material

Factory Assembled Manual Motor Protector + Contactor + Line Side Adapter

Assembled Combination Motor Controller ①	FLA Adjustment Range/ Overload Release—I_r (Amps)	Component Catalog Numbers				
		Line Side Adapter	Manual Motor Protector	Combination Connection Kit	Contactor ①	Manual Motor Protector Auxiliary Contact
XTFC Frame B MMP + Frame B Contactor						
XTFCP16BB_	0.1–0.16	XTPAXLSA	XTPRP16BC1	XTPAXTPCB	XTCE007B10_	XTPAXFA11
XTFCP25BB_	0.16–0.25	XTPAXLSA	XTPRP25BC1	XTPAXTPCB	XTCE007B10_	XTPAXFA11
XTFCP40BB_	0.25–0.4	XTPAXLSA	XTPRP40BC1	XTPAXTPCB	XTCE007B10_	XTPAXFA11
XTFCP63BB_	0.4–0.63	XTPAXLSA	XTPRP63BC1	XTPAXTPCB	XTCE007B10_	XTPAXFA11
XTFC001BB_	0.63–1	XTPAXLS	XTPR001BC1	XTPAXTPCB	XTCE007B10_	XTPAXFA11
XTFC1P6BB_	1–1.6	XTPAXLSA	XTPR1P6BC1	XTPAXTPCB	XTCE007B10_	XTPAXFA11
XTFC2P5BB_	1.6–2.5	XTPAXLSA	XTPR2P5BC1	XTPAXTPCB	XTCE007B10_	XTPAXFA11
XTFC004BB_	2.5–4	XTPAXLSA	XTPR004BC1	XTPAXTPCB	XTCE007B10_	XTPAXFA11
XTFC6P3BB_	4–6.3	XTPAXLSA	XTPR6P3BC1	XTPAXTPCB	XTCE007B10_	XTPAXFA11
XTFC010BB_	6.3–10	XTPAXLSA	XTPR010BC1	XTPAXTPCB	XTCE009B10_	XTPAXFA11
XTFC012BB_	8–12	XTPAXLSA	XTPR012BC1	XTPAXTPCB	XTCE012B10_	XTPAXFA11
XTFC016BB_	10–16	XTPAXLSA	XTPR016BC1	XTPAXTPCB	XTCE015B10_	XTPAXFA11
XTFC Frame B MMP + Frame C Contactor						
XTFC016BC_	10–16	XTPAXLSA	XTPR016BC1	XTPAXTPCC	XTCE018C10_	XTPAXFA11
XTFC020BC_	16–20	XTPAXLSA	XTPR020BC1	XTPAXTPCC	XTCE025C10_	XTPAXFA11
XTFC025BC_	20–25	XTPAXLSA	XTPR025BC1	XTPAXTPCC	XTCE025C10_	XTPAXFA11
XTFC032BC_	25–32	XTPAXLSA	XTPR032BC1	XTPAXTPCC	XTCE032C10_	XTPAXFA11
XTFC Frame D MMP + Frame C Contactor						
XTFC016DC_	10–16	XTPAXLSAD	XTPR016DC1	②	XTCE018C10_	XTPAXFA11
XTFC025DC_	16–25	XTPAXLSAD	XTPR025DC1	②	XTCE025C10_	XTPAXFA11
XTFC032DC_	25–32	XTPAXLSAD	XTPR032DC1	②	XTCE032C10_	XTPAXFA11
XTFC Frame D MMP + Frame D Contactor						
XTFC040DD_	32–40	XTPAXLSAD	XTPR040DC1	XTPAXTPCD ③	XTCE040D00_	XTPAXFA11
XTFC050DD_	40–50	XTPAXLSAD	XTPR050DC1	XTPAXTPCD ③	XTCE050D00_	XTPAXFA11
XTFC058DD_	50–58	XTPAXLSAD	XTPR058DC1	XTPAXTPCD ③	XTCE065D00_	XTPAXFA11
XTFC063DD_	55–65	XTPAXLSAD	XTPR063DC1	XTPAXTPCD ③	XTCE065D00_	XTPAXFA11

Notes

① Underscore (_) indicates magnetic coil suffix required. See **Page V5-T1-202**.

② The connection between the XTPR…DC1 and the XTCE…C_ contactor will be made with flexible wire and mounted to the DIN rail adapter plate (XTPAXTPCPD).

③ The reversing connection between the XTPR…DC1 and the (2) XTCE…C_ contactors will be accomplished by using the non-reversing combination connection kit (XTPAXTPCD), Frame D reversing link kit (XTCEXRLD), additional DIN rail adapter plate (XTPAXTPCPD) and DIN adapter connection element (XTPAXCNE).

1

XTFR Reversing Combination Motor Controllers—Component Bill of Material

Factory Assembled Manual Motor Protector + Contactor + Line Side Adapter

Assembled Combination Motor Controller ①	FLA Adjustment Range/ Overload Release—I_r (Amps)	Component Catalog Numbers				
		Line Side Adapter	Manual Motor Protector	Combination Connection Kit	Contactor ①	Manual Motor Protector Auxiliary Contact
XTFR Frame B MMP + Frame B Contactor						
XTFRP16BB_	0.1–0.16	XTPAXLSA	XTPRP16BC1	XTPAXTPCRB	(2) XTCE007B01_	XTPAXFA11
XTFRP25BB_	0.16–0.25	XTPAXLSA	XTPRP25BC1	XTPAXTPCRB	(2) XTCE007B01_	XTPAXFA11
XTFRP40BB_	0.25–0.4	XTPAXLSA	XTPRP40BC1	XTPAXTPCRB	(2) XTCE007B01_	XTPAXFA11
XTFRP63BB_	0.4–0.63	XTPAXLSA	XTPRP63BC1	XTPAXTPCRB	(2) XTCE007B01_	XTPAXFA11
XTFR001BB_	0.63–1	XTPAXLSA	XTPR001BC1	XTPAXTPCRB	(2) XTCE007B01_	XTPAXFA11
XTFR1P6BB_	1–1.6	XTPAXLSA	XTPR1P6BC1	XTPAXTPCRB	(2) XTCE007B01_	XTPAXFA11
XTFR2P5BB_	1.6–2.5	XTPAXLSA	XTPR2P5BC1	XTPAXTPCRB	(2) XTCE007B01_	XTPAXFA11
XTFR004BB_	2.5–4	XTPAXLSA	XTPR004BC1	XTPAXTPCRB	(2) XTCE007B01_	XTPAXFA11
XTFR6P3BB_	4–6.3	XTPAXLSA	XTPR6P3BC1	XTPAXTPCRB	(2) XTCE007B01_	XTPAXFA11
XTFR010BB_	6.3–10	XTPAXLSA	XTPR010BC	XTPAXTPCRB	(2) XTCE009B01_	XTPAXFA11
XTFR012BB_	8–12	XTPAXLSA	XTPR012BC1	XTPAXTPCRB	(2) XTCE012B01_	XTPAXFA11
XTFR Frame B MMP + Frame C Contactor						
XTFR016BC_	10–16	XTPAXLSA	XTPR016BC1	XTPAXTPCRC	(2) XTCE018C01_	XTPAXFA11
XTFR020BC_	16–20	XTPAXLSA	XTPR020BC1	XTPAXTPCRC	(2) XTCE025C01_	XTPAXFA11
XTFR025BC_	20–25	XTPAXLSA	XTPR025BC1	XTPAXTPCRC	(2) XTCE025C01_	XTPAXFA11
XTFR032BC_	25–32	XTPAXLSA	XTPR032BC1	XTPAXTPCRC	(2) XTCE032C01_	XTPAXFA11
XTFR Frame D MMP + Frame C Contactor						
XTFR016DC_	10–16	XTPAXLSAD	XTPR016DC1	②	(2) XTCE018C01_	XTPAXFA11
XTFR025DC_	16–25	XTPAXLSAD	XTPR025DC1	②	(2) XTCE025C01_	XTPAXFA11
XTFR032DC_	25–32	XTPAXLSAD	XTPR032DC1	②	(2) XTCE032C01_	XTPAXFA11
XTFR Frame D MMP + Frame D Contactor						
XTFR040DD_	32–40	XTPAXLSAD	XTPR040DC1	③	(2) XTCE040D00_	XTPAXFA11
XTFR050DD_	40–50	XTPAXLSAD	XTPR050DC1	③	(2) XTCE050D00_	XTPAXFA11
XTFR058DD_	50–58	XTPAXLSAD	XTPR058DC1	③	(2) XTCE065D00_	XTPAXFA11
XTFR063DD_	55–65	XTPAXLSAD	XTPR063DC1	③	(2) XTCE065D00_	XTPAXFA11

Notes

① Underscore (_) indicates magnetic coil suffix required. See **Page V5-T1-202**.

② The connection between the XTPR…DC1 and the XTCE…C_ contactor will be made with flexible wire and mounted to the DIN rail adapter plate (XTPAXTPCPD).

③ The reversing connection between the XTPR…DC1 and the (2) XTCE…C_ contactors will be accomplished by using the non-reversing combination connection kit (XTPAXTPCD), Frame D reversing link kit (XTCEXRLD), additional DIN rail adapter plate (XTPAXTPCPD) and DIN adapter connection element (XTPAXCNE).

Manual Motor Controllers Short-Circuit Ratings for UL/CSA Group Installations

XTSC and XTSR Manual Motor Controllers (MMC)

Assembled Controller ①		FLA Adjustment Range/Overload Release— I_r (Amps)	Short-Circuit Release— I_{rm} (Amps)	Group Installation, UL/CSA Max. rms Symmetrical Short-Circuit Ratings (kA/kA with Current Limiter)			Maximum Upstream Protective Device (A/A with Current Limiter)	
Non-Reversing	Reversing			240V	480V	600V	Maximum Fuse 600V	Maximum Circuit Breaker 600V
XTSC and XTSR Frame B MMP + Frame B Contactor								
XTSCP16BB_	XTSRP16BB_	0.1–0.16	2.2	50	50	50	600	600
XTSCP25BB_	XTSRP25BB_	0.16–0.25	3.5	50	50	50	600	600
XTSCP40BB_	XTSRP40BB_	0.25–0.4	5.6	50	50	50	600	600
XTSCP63BB_	XTSRP63BB_	0.4–0.63	8.82	50	50	50	600	600
XTSC001BB_	XTSR001BB_	0.63–1	14	50	50	50	600	600
XTSC1P6BB_	XTSR1P6BB_	1–1.6	22.4	50	50	50	600	600
XTSC2P5BB_	XTSR2P5BB_	1.6–2.5	35	50	50	50	600	600
XTSC004BB_	XTSR004BB_	2.5–4	56	50	50	50	600	600
XTSC6P3BB_	XTSR6P3BB_	4–6.3	88.2	50	50	50	600	600
XTSC010BB_	XTSR010BB_	6.3–10	140	22	22	22	150/600	125/600
XTSC012BB_	XTSR012BB_	8–12	168	10/50	10/50	10/50	150/600	125/600
XTSC016BB_	—	10–16	224	10/50	10/50	10/50	150/600	125/600
XTSC and XTSR Frame B MMP + Frame C Contactor								
XTSC016BC_	XTSR016BC_	10–16	224	10/50	10/50	10/50	150/600	125/600
XTSC020BC_	XTSR020BC_	16–20	280	10/18	10/18	10/18	150/600	125/600
XTSC025BC_	XTSR025BC_	20–25	350	10/18	10/18	10/18	150/600	125/600
XTSC032BC_	XTSR032BC_	25–32	448	5/18	5/18	5/18	150/600	125/600
XTSC and XTSR Frame D MMP + Frame C Contactor								
XTSC016DC_	XTSR016DC_	10–16	224	50	50	10	600	600
XTSC025DC_	XTSR025DC_	16–25	350	50	50	10	600	600
XTSC032DC_	XTSR032DC_	25–32	448	50	50	10	600	600
XTSC and XTSR Frame D MMP + Frame D Contactor								
XTSC040DD_	XTSR040DD_	32–40	560	50	50	10	600	600
XTSC050DD_	XTSR050DD_	40–50	700	50	50	10	600	600
XTSC058DD	XTSR058DD_	50–58	812	50	50	—	—	—
XTSC063DD_	XTSR063DD_	55–65	882	50	50	—	—	—

Note

① Underscore (_) indicates magnetic coil suffix required. See **Page V5-T1-202**.

1

Combination Motor Controllers Short-Circuit Ratings for UL 508 Type F Application

XTFC and XTFR Combination Motor Controllers (CMC), UL 508 Type F

Assembled Controller ①		FLA Adjustment Range/Overload Release— I_r (Amps)	Short-Circuit Release— I_{rm} (Amps)	UL 508 Type F Application Max. rms Symmetrical Short-Circuit Ratings (kA)			Maximum Upstream Protective Device (A) ②	
Non-Reversing	Reversing			240V	480/277V	600/347V	Maximum Fuse 600V	Maximum Circuit Breaker 600V
XTFC and XTFR Frame B MMP + Frame B Contactor								
XTFCP16BB_	XTFRP16BB_	0.1–0.16	2.2	65	65	—	Not required	Not required
XTFCP25BB_	XTFRP25BB_	0.16–0.25	3.5	65	65	—	Not required	Not required
XTFCP40BB_	XTFRP40BB_	0.25–0.4	5.6	65	65	—	Not required	Not required
XTFCP63BB_	XTFRP63BB_	0.4–0.63	8.82	65	65	—	Not required	Not required
XTFC001BB_	XTFR001BB_	0.63–1	14	65	65	—	Not required	Not required
XTFC1P6BB_	XTFR1P6BB_	1–1.6	22.4	65	65	—	Not required	Not required
XTFC2P5BB_	XTFR2P5BB_	1.6–2.5	35	65	65	—	Not required	Not required
XTFC004BB_	XTFR004BB_	2.5–4	56	65	65	—	Not required	Not required
XTFC6P3BB_	XTFR6P3BB_	4–6.3	88.2	65	65	—	Not required	Not required
XTFC010BB_	XTFR010BB_	6.3–10	140	65	65	—	Not required	Not required
XTFC012BB_	XTFR012BB_	8–12	168	50	50	—	Not required	Not required
XTFC016BB_	—	10–16	224	50	50	—	Not required	Not required
XTFC and XTFR Frame B MMP + Frame C Contactor								
XTFC016BC_	XTFR016BC_	10–16	224	18	18	—	Not required	Not required
XTFC020BC_	XTFR020BC_	16–20	280	18	18	—	Not required	Not required
XTFC025BC_	XTFR025BC_	20–25	350	18	18	—	Not required	Not required
XTFC032BC_	XTFR032BC_	25–32	448	18	18	—	Not required	Not required
XTFC and XTFR Frame D MMP + Frame C Contactor								
XTFC016DC_	XTFR016DC_	10–16	224	65	65	50	Not required	Not required
XTFC025DC_	XTFR025DC_	16–25	350	65	65	50	Not required	Not required
XTFC032DC_	XTFR032DC_	25–32	448	65	65	50	Not required	Not required
XTFC and XTFR Frame D MMP + Frame D Contactor								
XTFC040DD_	XTFR040DD_	32–40	560	65	65	50	Not required	Not required
XTFC050DD_	XTFR050DD_	40–50	700	65	65	—	Not required	Not required
XTFC058DD_	XTFR058DD_	50–58	812	65	65	—	Not required	Not required
XTFC063DD_	XTFR063DD_	55–65	882	65	65	—	Not required	Not required

Notes

① Underscore (_) indicates magnetic coil suffix required. See **Page V5-T1-202**.

② For UL 508 Type F applications, the combination motor controller assembly does not require a dedicated upstream protective device in the panel, thus a maximum rating is not required.

Dimensions

Approximate Dimensions in mm [in]

XTSC...BB_

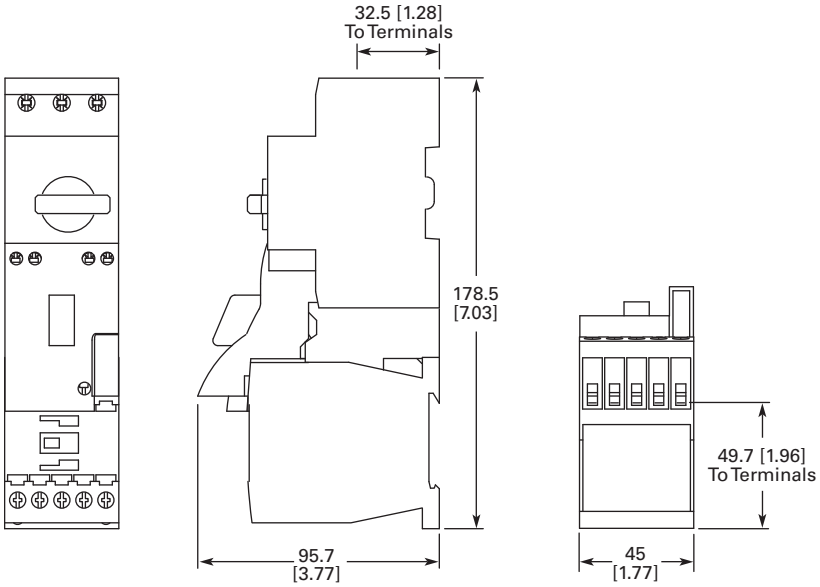

XTSR...BB_

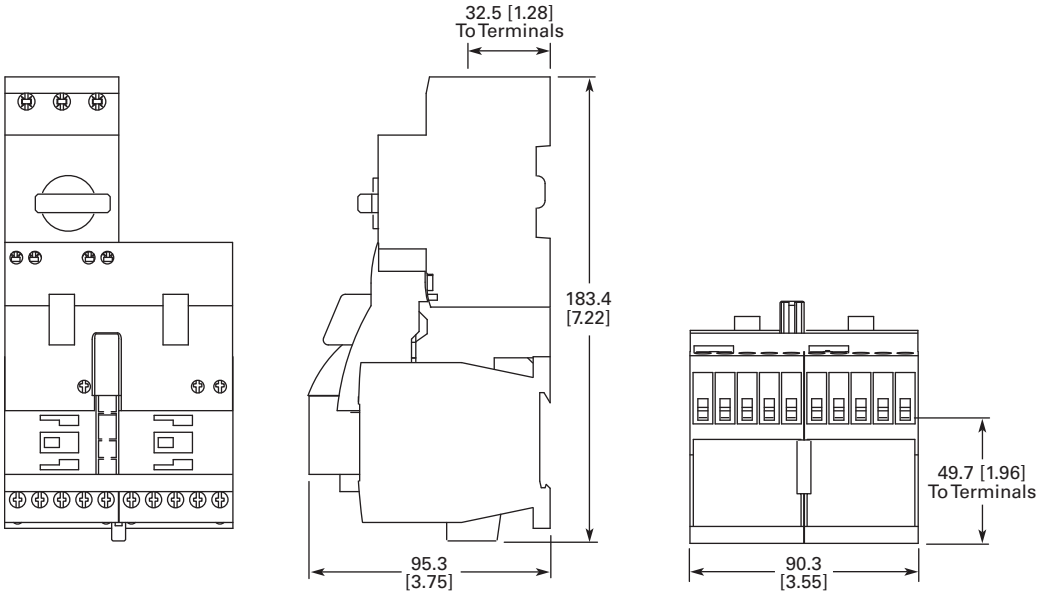

Approximate Dimensions in mm [in]

XTSC...BC_

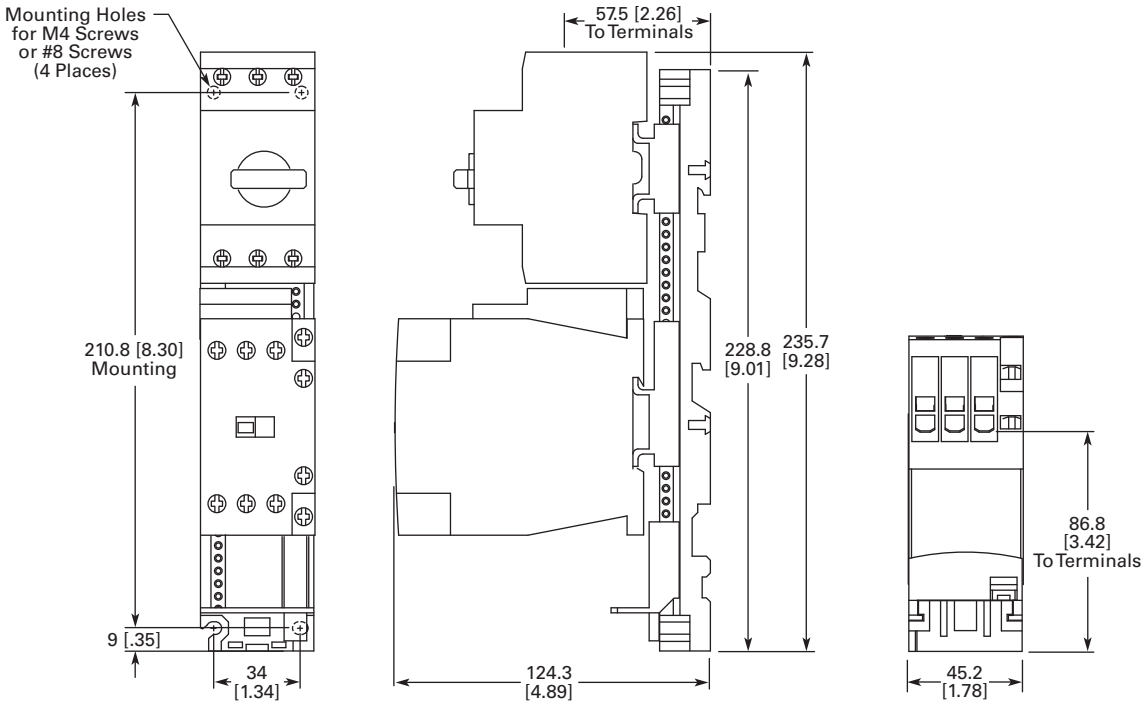

XTSR...BC_

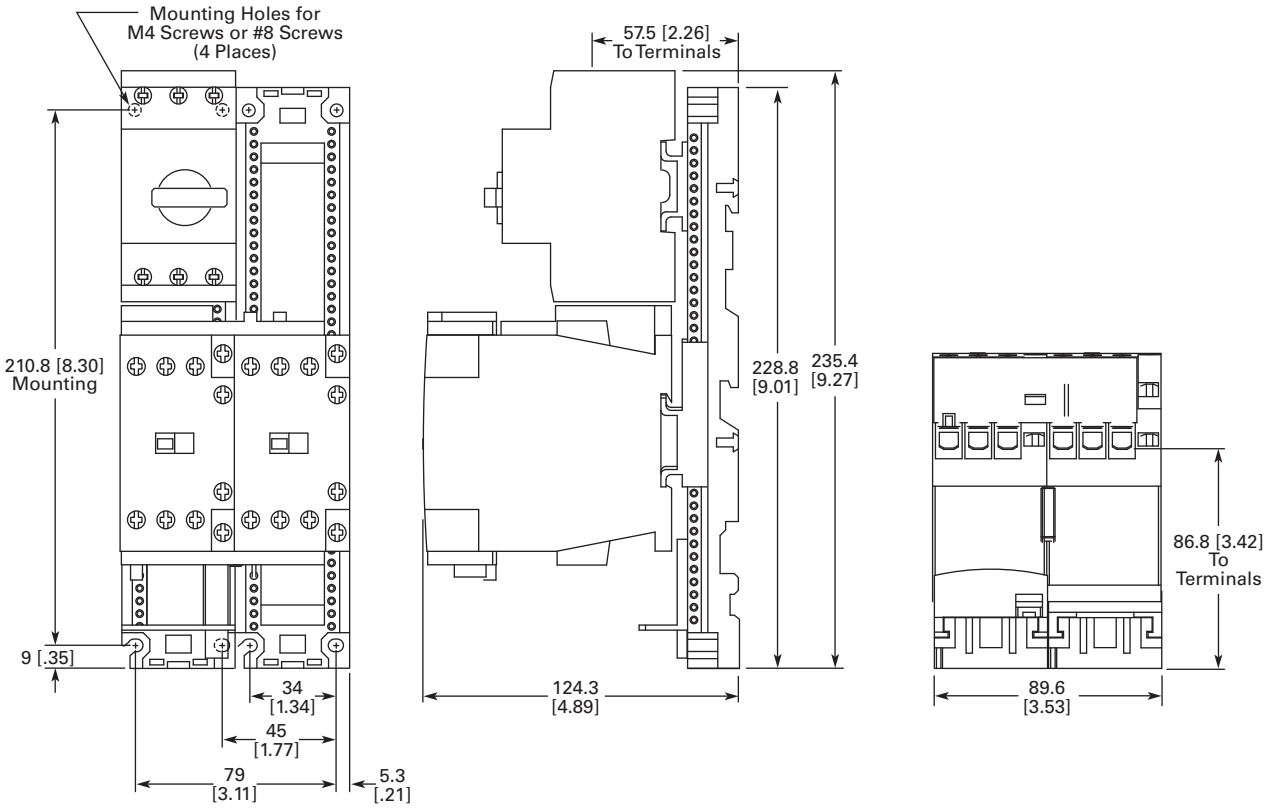

Approximate Dimensions in mm [in]

XTSC...DD_

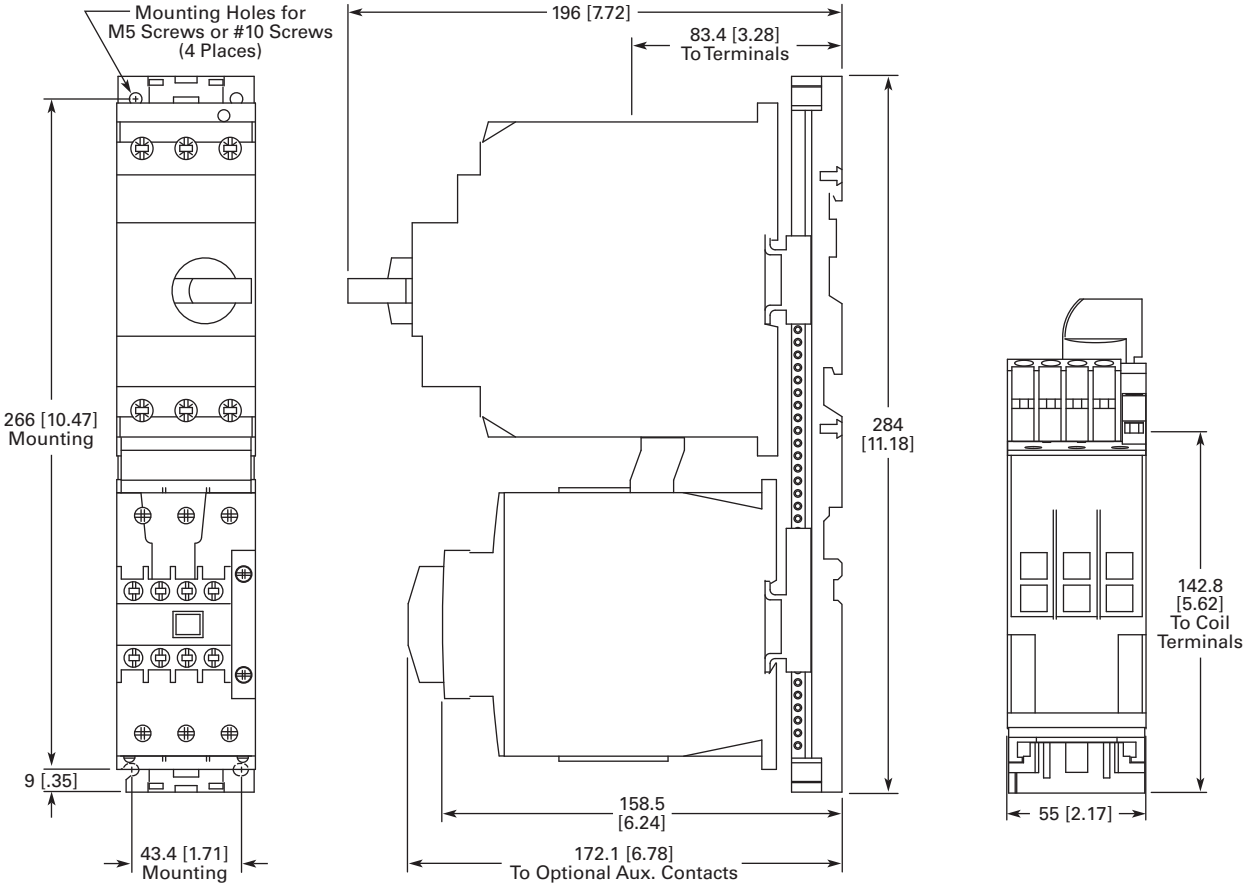

XTFC...BB_

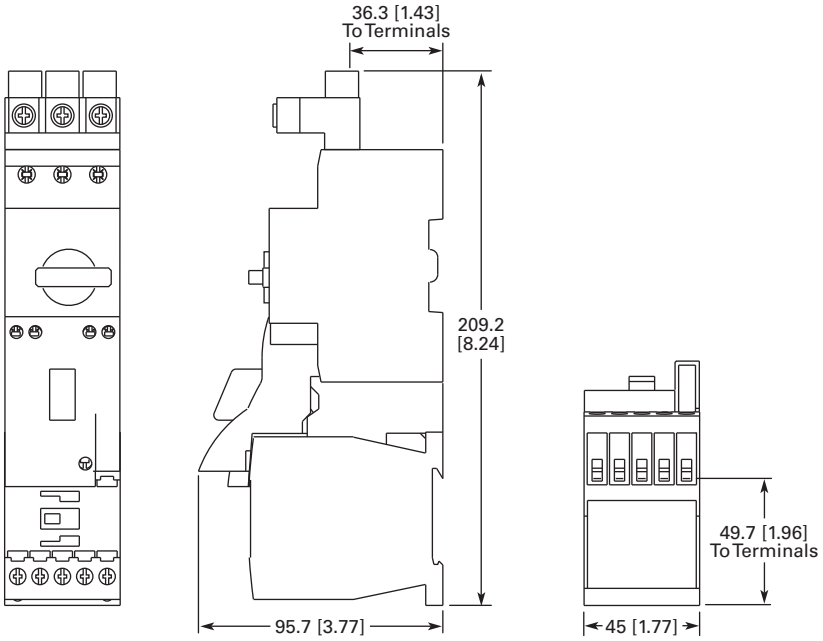

Approximate Dimensions in mm [in]

XTFR...BB_

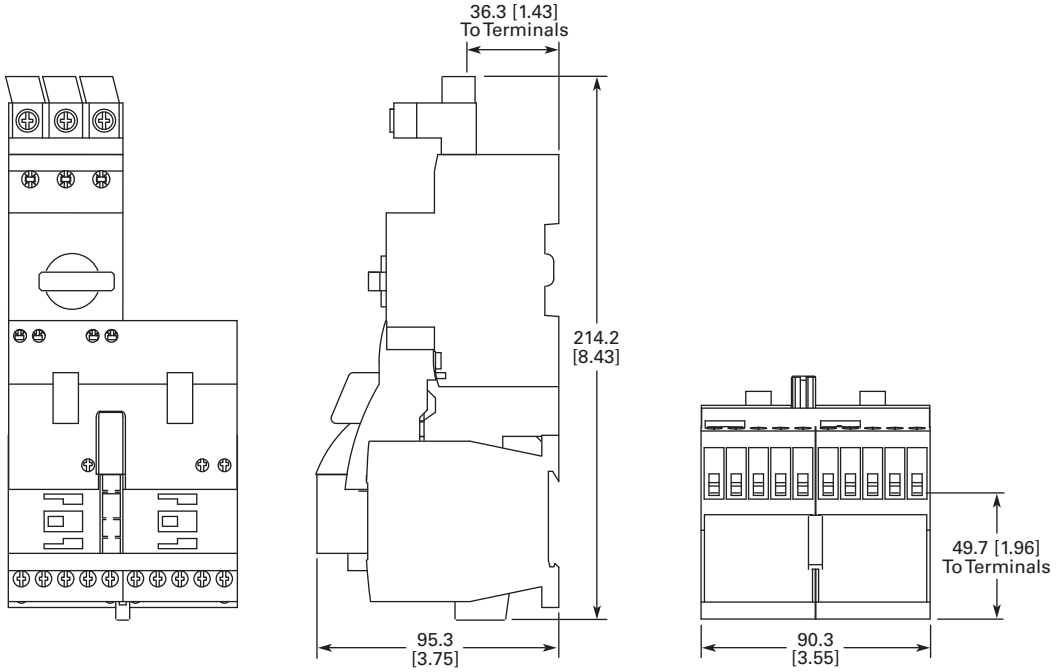

XTFC...BC_

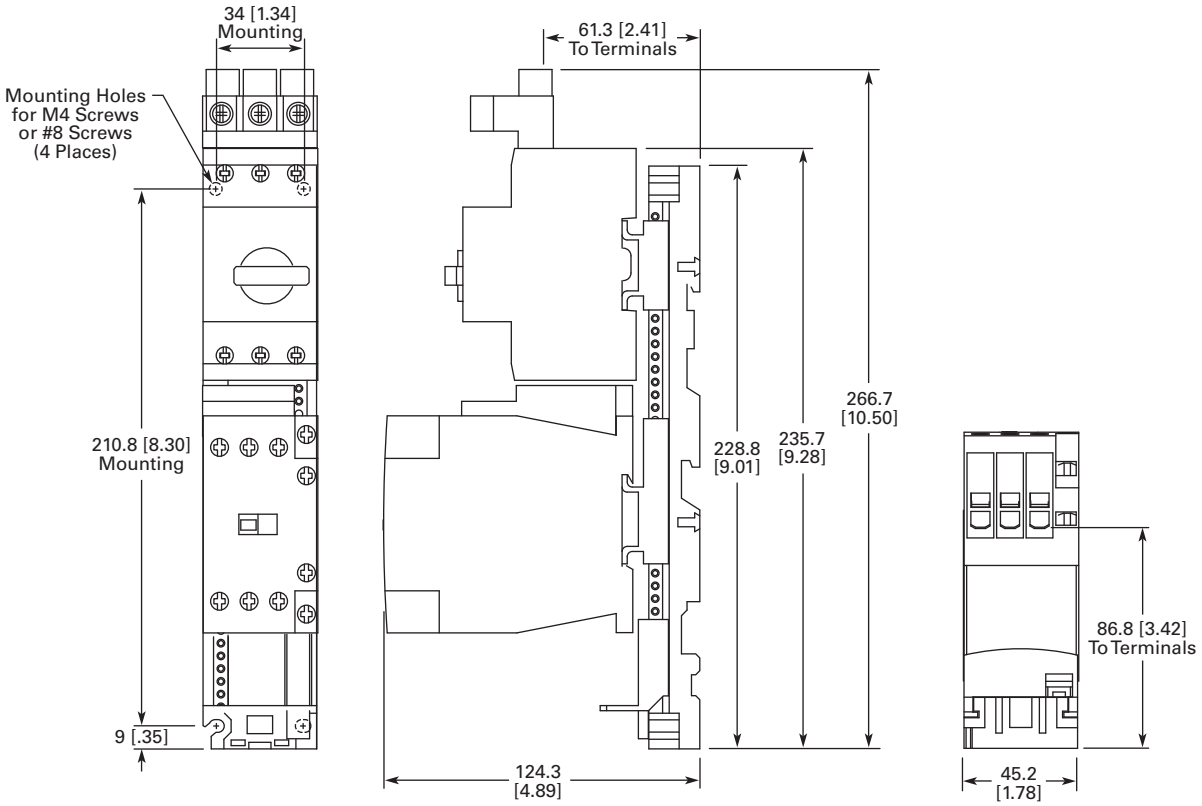

Approximate Dimensions in mm [in]

XTFR...BC_

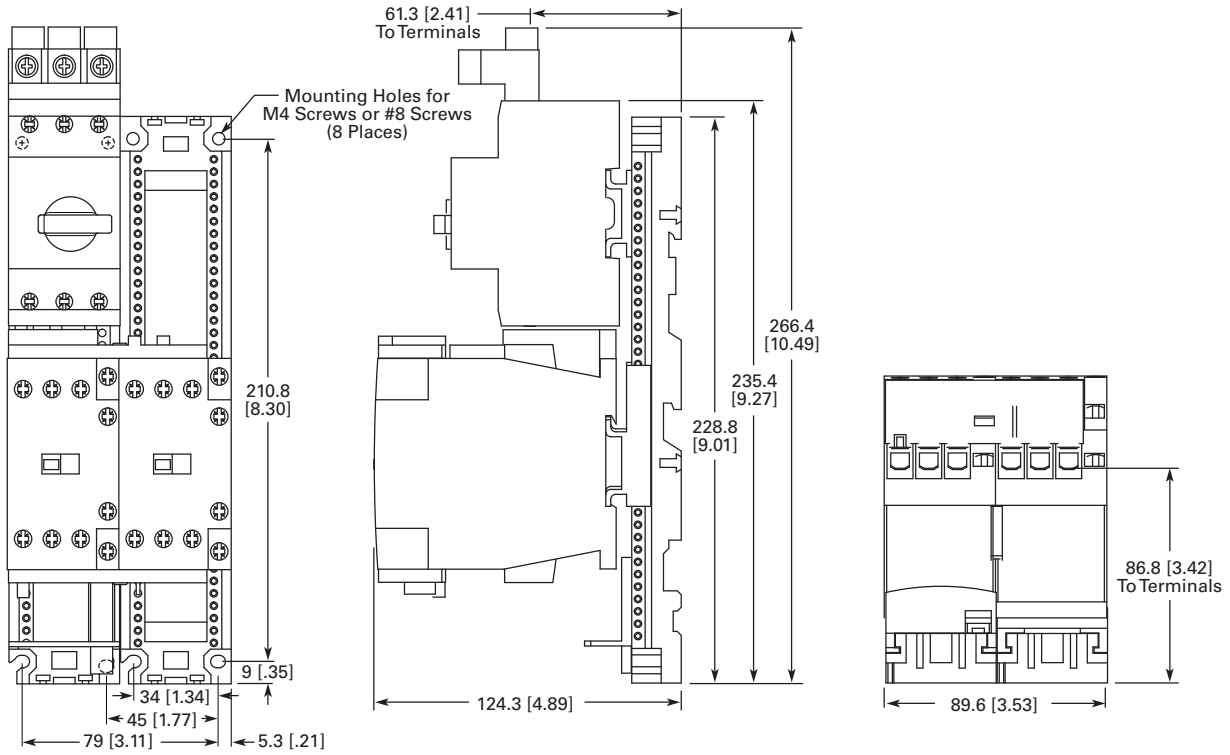
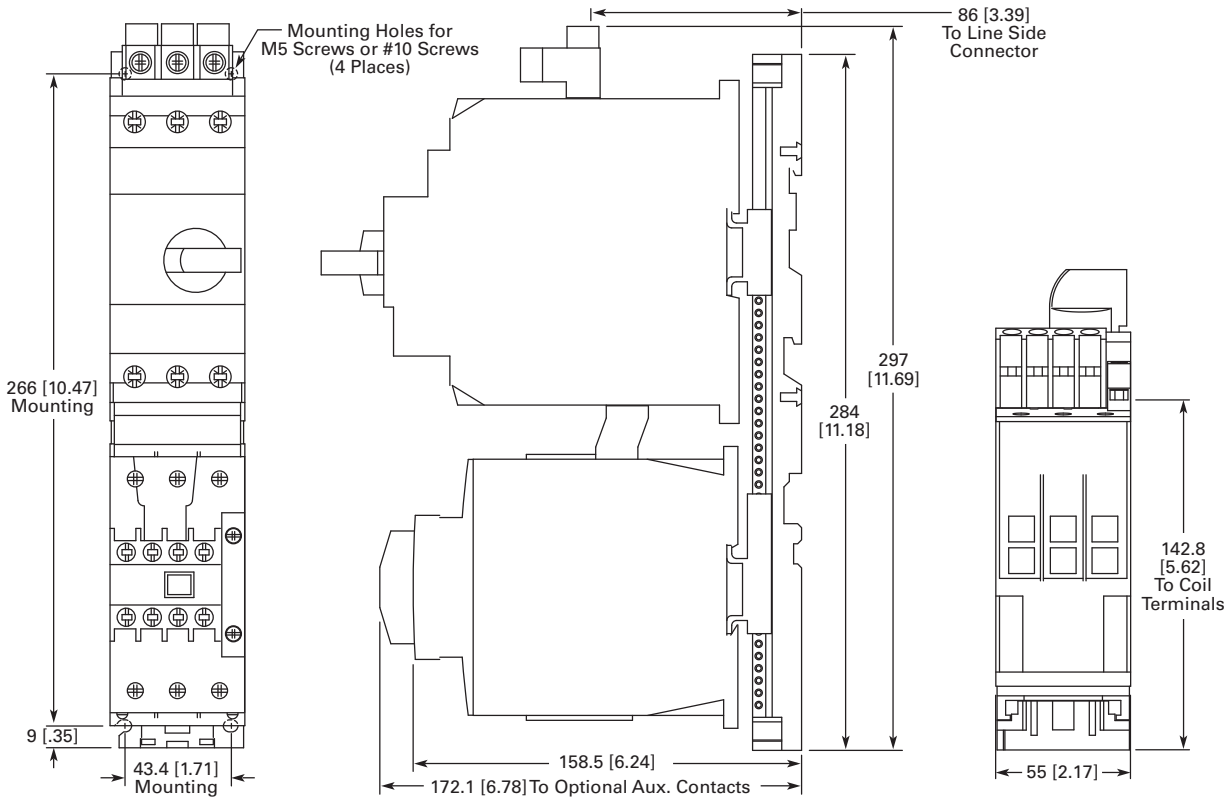
XTFC...DD_