Instruction Manual 902
12/7/2009

Eclipse Trilogy Actuator

Series T500

Version 1

SIMPLE. SECURE. EFFICIENT.
TRILOGY
SERIES

ECLIPSE®
Innovative Thermal Solutions

Copyright

Copyright 2009 by Eclipse, Inc. All rights reserved worldwide. This publication is protected by federal regulation and shall not be copied, distributed, transmitted, transcribed or translated into any human or computer language, in any form or by any means, to any third parties, without the express written consent of Eclipse, Inc.

Disclaimer Notice

In accordance with the manufacture's policy of continual product improvement, the product presented in this brochure is subject to change without notice or obligation.

The material in this manual is believed adequate for the intended use of the product. If the product is used for purposes other than those specified herein, confirmation of validity and suitability must be obtained. Eclipse warrants that the product itself does not infringe upon any United States patents. No further warranty is expressed or implied.

Liability and Warranty

We have made every effort to make this manual as accurate and complete as possible. Should you find errors or omissions, please bring them to our attention so that we may correct them. In this way we hope to improve our product documentation for the benefit of our customers. Please send your corrections and comments to our Marketing Communications Manager.

It must be understood that Eclipse's liability for its product, whether due to breach of warranty, negligence, strict liability, or otherwise is limited to the furnishing of replacement parts and Eclipse will not be liable for any other injury, loss, damage or expenses, whether direct or consequential, including but not limited to loss of use, income, or damage to material arising in connection with the sale, installation, use of, inability to use, or the repair or replacement of Eclipse's products.

Any operation expressly prohibited in this manual, any adjustment, or assembly procedures not recommended or authorized in these instructions shall void the warranty.

Document Conventions

There are several special symbols in this document. You must know their meaning and importance.

The explanation of these symbols follows below. Please read it thoroughly.

How To Get Help

If you need help, contact your local Eclipse representative. You can also contact Eclipse at:

1665 Elmwood Rd.
Rockford, Illinois 61103 U.S.A.

Phone: 815-877-3031
Fax: 815-877-3336

http://www.eclipsenet.com

⚠	This is the safety alert symbol. It is used to alert you to potential personal injury hazards. Obey all safety messages that follow this symbol to avoid possible injury or death.
⚠ **DANGER**	Indicates a hazardous situation which, if not avoided, will result in death or serious injury.
⚠ **WARNING**	Indicates a hazardous situation which, if not avoided, could result in death or serious injury.
⚠ **CAUTION**	Indicates a hazardous situation which, if not avoided, could result in minor or moderate injury.
NOTICE	Is used to address practices not related to personal injury.
NOTE	Indicates an important part of text. Read thoroughly.

Table of Contents

1 Introduction 4
Product Description 4
Product Features 4
Audience 4
Purpose 4
2 Safety 5
Safety Warnings 5
Capabilities 5
Operator Training 5
Replacement Parts 5
Disposal 5
System Use 5
3 Installation 7
Handling 7
Storage 7
Approval of Components Electrical Wiring 7
Checklist Before Installation 7
Actuator Mounting 7
Cam Adjustment 8
Shaft Disengage 9
Auxiliary Contacts 9
Actuator Wiring 9
Electrical Version, Control Signal Wiring 9
Electrical Version, Range Adjustment 10
Connection Terminals 11
Cam Positions (Factory Settings) 13
Typical Application 14
Checklist After Installation 14
4 Specifications 16
Standards and Certificates 16
Dimensions 17
5 Maintenance & Troubleshooting 18
Maintenance 18
Monthly Checklist 18
Yearly Checklist 18
Troubleshooting 18

Introduction 1

Product Description

The Eclipse T500 Actuator is suitable for driving flow control valves, butterfly valves, dampers or other applications which require rotary motion.

The Actuators are primarily used with an electronic controller to regulate a process load, such as temperature. Models provide proportional positioning in response to 2-position, 3-position, 135 ohm, 4-20 mA and 2-10 VDC signal. The drive shaft of the actuator connects to a butterfly valve stem, which rotates 90 degrees from minimum to maximum position.

Figure 1.1. T500 Actuator

Product Features

The T500 Actuators are designed to optimize performance of a combustion system. Features include:

- Power and approvals accepted globally
- Clockwise and counterclockwise models
- Fine step resolution and repeatability
- Basic step (bumping) or analog control
- Adjustable stroke and signal range
- Drive shaft can be manually disengaged
- Simple and precise cam switch adjustment
- Models with position feedback potentiometer

Audience

This manual has been written for people who are already familiar with all aspects of a combustion system and its add-on components, also referred to as “the burner system”.

The audience is expected to have experience with the control components of a burner system.

Purpose

The purpose of this manual is to make sure that the actuator component of a burner system is used in a safe, effective and trouble free manner.

Safety

2

Important notices about safe actuator operation will be found in this section. To avoid personal injury, damage to property or the facility, the following warnings must be observed. Read this entire manual before attempting to start the system. If any part of the information in this manual is not understood, contact Eclipse before continuing.

Safety Warnings

WARNING

- **Protect against electrical shock before making any wiring changes in the connection area by turning off the main power supply. Ensure that the power cannot be inadvertently switched on again and that it is indeed dead.**
- **Protect against electrical shock by providing adequate protection for the terminal connections. Ensure that no bare conductors are exposed to touch at the terminals. Do not operate with missing terminal plugs.**
- **Protect against a electrical shock hazard by ensuring that the cover can be lifted upwards of the control unit, allowing safe setting of the cams when main voltage is present.**

CAUTION

- **Risk of electric shock - More than one disconnect switch may be required to de-energize the equipment. Disconnect all power to the device before servicing.**

NOTICE

- **After each adjustment, maintenance or troubleshooting check to ensure that wiring is in an orderly state.**
- **Fall or shock can adversely affect the safety functions. Such actuators must not be put into operation even if they do not exhibit any damage.**

Capabilities

Adjustment, maintenance and troubleshooting of the mechanical parts of this system must be done by qualified personnel with good electrical and mechanical aptitude and experience with combustion equipment.

Operator Training

The best safety precaution is an alert and competent operator. Thoroughly instruct operators so they demonstrate an understanding of the equipment and its operation.

Replacement Parts

Order replacement actuators from Eclipse only.

Disposal

The actuator contains electrical and electronic components and must not be disposed of together with domestic waste.

Local and currently valid legislation must be observed.

System Use

The Eclipse T500 Actuator must be used with an approved listed combustion control system consisting of a flame safeguard and safety shut-off valves. The following diagrams illustrate the general arrangement of the typical control schemes. These diagrams do not show all of the devices that may be required for a complete control system and are not meant to be used for construction.

Fixed Air Burner

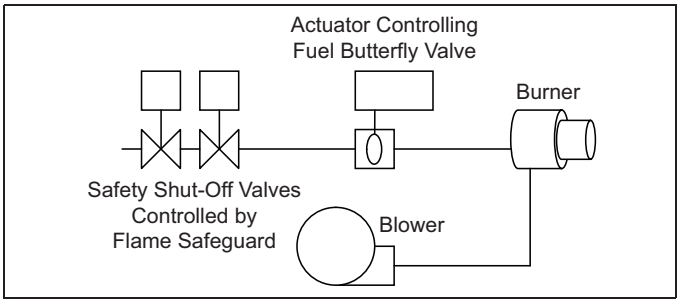

Figure 2.1. Fixed Air Burner

Ratio Burner

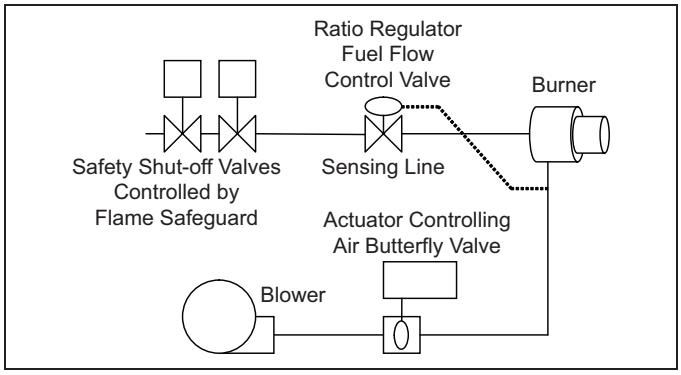

Figure 2.2. Ratio Burner

CAUTION

- **Use of this product in the European community shall only be deployed in a manner that meets the applicable EC directives and laws.**
- **In areas where DIN regulations apply, the mounting and installation must comply wth DIN/ VDE 0100, 0550 and DIN/VDE 0722.**

Installation 3

In this section you will find the information and instructions that you need to install the actuator.

CAUTION

- **Installation and maintenance must conform with the National Electrical Code and all other national and local codes and authorities having jurisdiction. The actuator must be installed by a qualified technician.**

Handling

1. Make sure that the area is clean.
2. Protect the actuator from the weather, damage, dirt and moisture.
3. Protect the actuator from excessive temperatures and humidity.
4. Take care not to hit or drop the actuator.

Storage

1. Make sure that the actuator is clean and in good condition.
2. After you have made sure that everything is present and in good condition, keep the actuator in the original package as long as possible.
3. Store the actuator in a cool, clean, dry room.

Approval of Components Electrical Wiring

All of the electrical wiring must comply with one of the following standards:

- NFPA Standards 70
- EN60204-1
- the electrical wiring must be acceptable to the local authority having jurisdiction

Where to get the standards:

The NFPA Standards are available from:

National Fire Protection Agency
Batterymarch Park
Quincy, MA 02269

Information on the EN standards, and where to get the standards is available from:

CENELEC
Avenue Marnix 17
B-1000 Brussels, Belgium

Checklist Before Installation

Access

Make sure that you install the actuator in such a way that you have easy access to it for inspection and maintenance. Ensure that the cover has enough clearance to be easily removed.

Environment

Make sure that the local environment matches the original operating specifications. Check the following items:

- voltage, frequency and stability of the electrical power
- humidity, altitude and temperature of air
- presence of damaging corrosive gases in the air

Actuator Mounting

Depending on your application, please keep the following in mind when mounting the actuator:

- The actuator housing has seven possible mounting holes, as shown in Figure 3.1.
  - The outer set of four holes “A” are clear for inserting bolts up to size M5 or #10.
  - The inner set of three holes “B” are drilled to a depth of 9.8mm (0.39") to accept tapping screws size M5 or #10-32.
  - A 6mm wide by 7mm long by 6mm deep hole “C” is provided for brackets designed with a stop pin.
- Mounting this actuator depends on the application; contact Eclipse for available mounting kits.
- When mounting the actuator, be certain that the actuator’s drive shaft is properly aligned with the other shaft to which it will be coupled to avoid undue lateral stress.
- The standard drive shaft is round with a Woodruff key for a coupling, as shown on page 17. Some models may have a square shaft.
- Provide support for the weight of conduit or cables into the actuator.
- Ensure clearance for cover removal.

- Ensure the actuator is not exposed to direct sunlight.
- Determine if the butterfly valve (BV) has unrestricted full rotation or if it has physical stops that limit rotation to a specific angle. Also, determine the minimum position, rotation direction to open, and maximum open position for the BV.
- Check the actuator's rotation direction and cam switch adjustments match to the butterfly valve. Refer to "Cam Positions" on page 13 to identify the low and high stroke adjustment.
- Make the electrical connections either temporary or as required by the application and apply power. Verify for proper and smooth motion over the full stroke range. Correct any abnormalities before placing the equipment into operation.

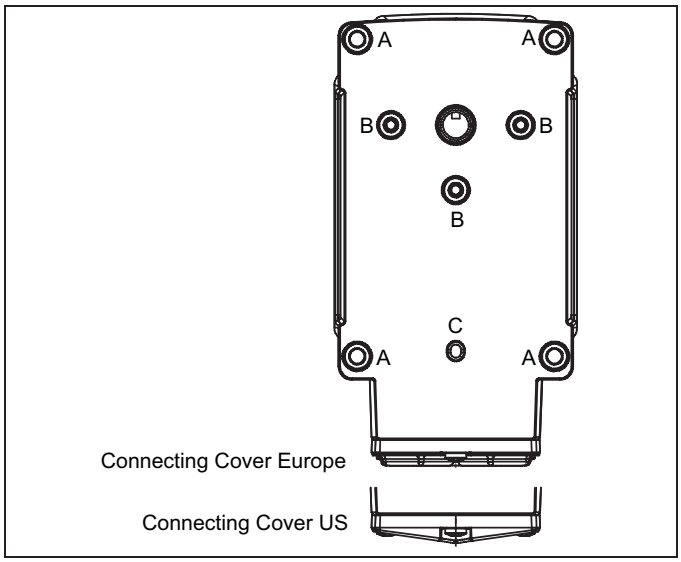

Figure 3.1. Mounting Hole Location

WARNING

- **Local regulations may require guards and/or warnings when connecting the actuator to a device that could cause finger pinching. The actuator stall torque is at least 10 Nm.**
- **Do not attempt to mechanically force the actuator shaft to rotate. See "Shaft Disengage" on page 9 for procedure.**

CAUTION

- **Appropriate electrical fittings must be installed to maintain seal and environmental ratings.**
- **Prevent water from condensation flowing into the actuator housing through the wiring conduits. Keep conduits oriented such that gravity will cause water to flow away from the actuator or provide a watertight seal in the conduit near the actuator.**

CAUTION

- **If using cables, provide strain relief in conformance to the relevant standards, such as DIN EN 60730 and DIN EN 60335.**

NOTE: The butterfly valve rotation direction is viewed from the shaft end connected to the actuator. The slot at the end of the butterfly valve shaft is parallel to the shutter. See Figure 3.2. When the shaft is rotated to align the slot to the pipe direction, the valve is at maximum flow. Eclipse BVs with the beveled shutter option have a 75 degree stroke. The minimum positions of these valves physically stop at about a 15 degree angle when the butterfly shaft is turned fully counter-clockwise. Therefore, the actuator must have its low position set to about 15 degrees to prevent trying to rotate against the physical stop. Final fine-tuning adjustments to the minimum position can be made after mounting the actuator to the BV.

NOTE: The rotating direction of the actuator is viewed into the shaft. Therefore, the clockwise butterfly valve needs a counter clockwise actuator.

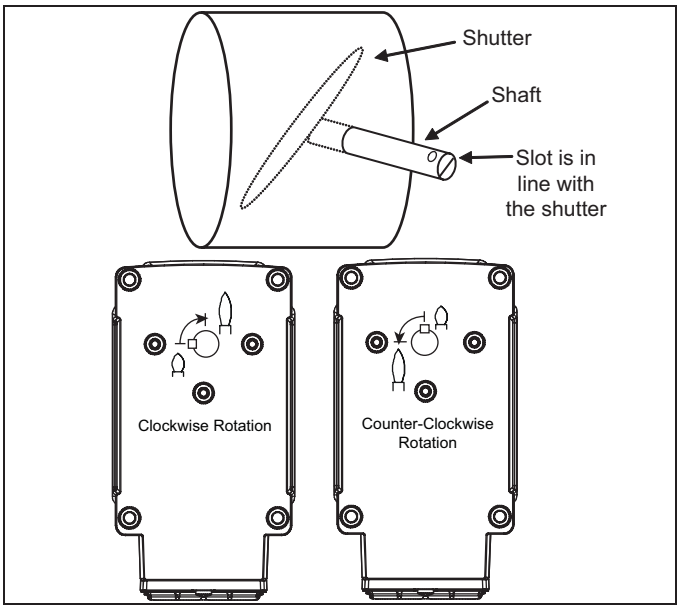

Figure 3.2.

Cam Adjustment

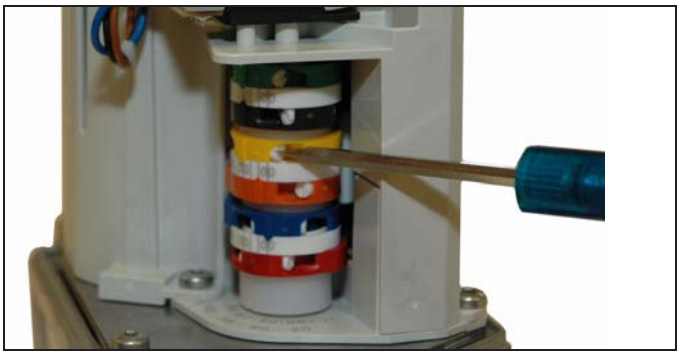

Figure 3.3.

Use a small flat blade screw driver in the screw slot corresponding to the cam to be adjusted. Turn the adjusting screw until the cam pointer is at the desired degree on the scale. An internal index at the bottom of the cams shows the current position. For clockwise-to-open models, use the outer scale marked “R”. For counter clockwise models, use the inner scale marked “L”. See “Cam Positions” on page 13.

Shaft Disengage

Shaft can be disengaged from the motor and part of the gear train by pressing pin K1. When the motor starts driving, then the shaft automatically re-engages.

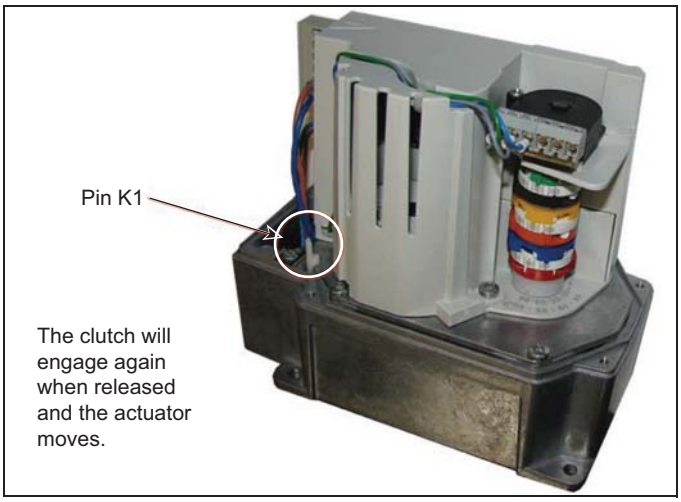

Figure 3.4.

Auxiliary Contacts

The internal contacts marked AUX are isolated and voltage-free. Take care not to exceed the contact ratings listed in the specifications table on page 16. These contacts can be used for position detection and auxiliary control.

Actuator Wiring

Access is through the two electrical connectors at the end of the actuator. Remove the housing cover to access the terminal strips, as shown in Figure 3.5.

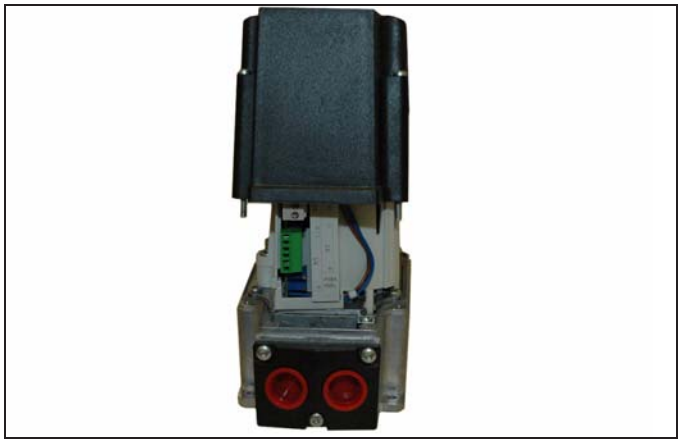

Figure 3.5. Actuator Wiring

Connection Terminals shown in Figure 3.8 and Figure 3.9 shows the wiring diagram for the actuator, while Typical Applications on Figure 3.11 shows a temperature control connected to the electronic version.

To install a wire into a terminal, first be sure the terminal is fully open. Strip the wire insulation back 1/4" (6mm), and insert the wire. Hold the wire in place while tightening the terminal screw. Inspect the wire for loose strands and gently pull it to ensure a secure connection. Use only one wire per terminal.

DANGER

- **To reduce the risk of electric shock - Do not connect to a circuit operating at more than 150 volts to ground.**

WARNING

- **Risk of electric shock - Removal of the housing cover allows access to conductors carrying hazardous voltage.**

CAUTION

- **The conduit connecting cover is plastic, therefore bonding to the gound and between conduit fittings must be provided as part of the installation.**

NOTICE

- **Connect only to a flexible wiring system.**
- **Use copper conductors only.**
- **For supply connections, use No. 16 AWG or larger wire rated for at least 194°F (90°C).**
- **Power to the actuator must be protected for over current according to the relevent standard, such as a fuse of maximum 6.3 AT.**
- **Wire all class 2 circuits using Types CL3, CL3R, CL3P or equivalent conductors.**
- **Required tightening torques:**
  - Housing cover: 3.5 Nm
  - Cable connecting cover: 2 Nm

Electronic Version, Control Signal Wiring

Connect a 4-20mA signal positive (+) to X1-3 and negative (–) to X1-2 (GND). Or alternately connect a 0-10 Vdc signal positive (+) to X1-1 and negative (–) to X1-2

(GND). For potentiometer, connect the high end of the pot to X1-6, the low end to X1-4 and the wiper to X1-5.

If more than one signal is connected, the respective position command from each are added together.

NOTE: Keep low voltage signal wiring separated from higher voltage wiring to reduce the chance of electrical interference. The use of shielded cable with one end of the shield connect to the ground can provide effective resistance to electrical interference.

Electronic Version, Range Adjustment

1. Adjust cam number "I" to the desired high fire position (e.g. 85°).

2. Adjust cam "V" to the required low fire position (e.g. 20°).

3. Feed signal corresponding to the high fire position (e.g. 20mA) to the analog input.

4. Adjust potentiometer "max".
   a. clockwise, if the actuator has not reached the maximum position yet.
   b. counterclockwise, until the actuator just starts moving.

5. Feed signal corresponding to the low fire position (e.g. 4 mA) to the analog input.

6. Adjust potentiometer "min".
   a. counterclockwise, if the actuator has not reached the min position yet.
   b. clockwise, until the actuator just starts moving.

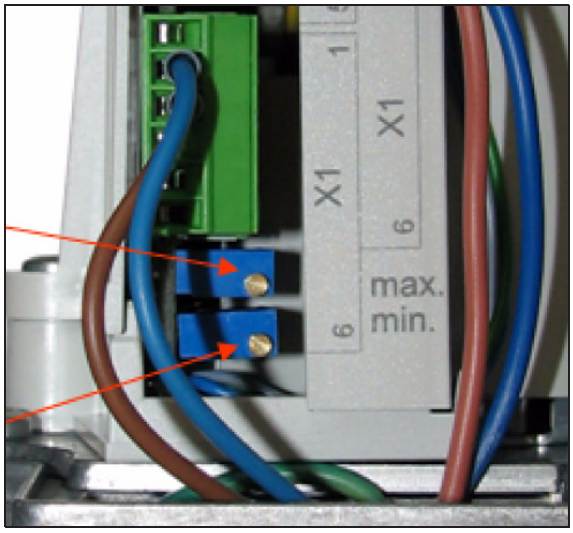

Figure 3.6.

The upper limit can be adjusted from 90° down to 60°. The lower range limit can be adjusted from 0° up to either 20° or 30°, depending on the upper limit adjustment. See Figure 3.7 for range and limits.

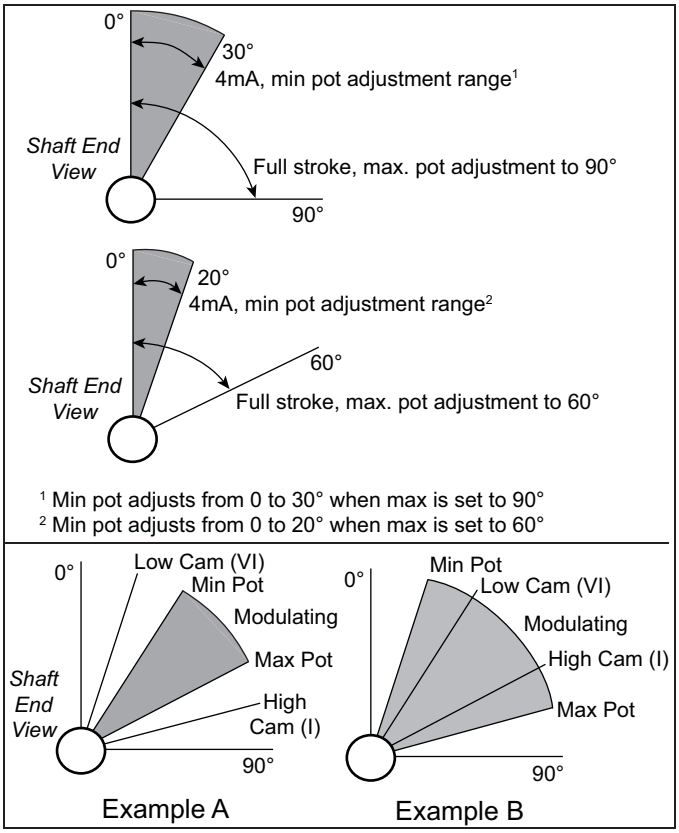

Figure 3.7. Range Adjustment

NOTE: For typical applications, the cam switches set the physical travel limits and the electrical modulating limits are set to match the cams.

When using position feedback voltage from the switches, be sure that the pot adjustments allow travel to actuate the cam switches.

In Figure 3.7, Example A, the actuator stops before actuating the cam switches.

Application - The burner low fire is above the valve closed position. When the burner is shut off, the valve needs to close to prevent hot air flowing back through the valve. To position a valve closed when the burner is off, turn off the enable input and apply power to the drive low input.

In Figure 3.7, Example B, the actuator stops before the analog input reaches its low or high value.

Application - Two actuators are driven from the same analog signal for limited ranging of a trim valve. The travel of the limited valve is less than a 90 degree stroke. For example, the limited valve can be set to travel from a low cam of 23 degrees and starts driving at 8mA due to the min pot adjustment. Then the high cam is set at 45 degrees and stops travel at 12mA due to the max pot adjustment. The result is that the trim valve remains at its low position (23°) for an analog signal from 4 to 8mA, then it travels open from 8 to 12mA and stays at the set high position (45°) for 12mA to 20mA.

Connection Terminals

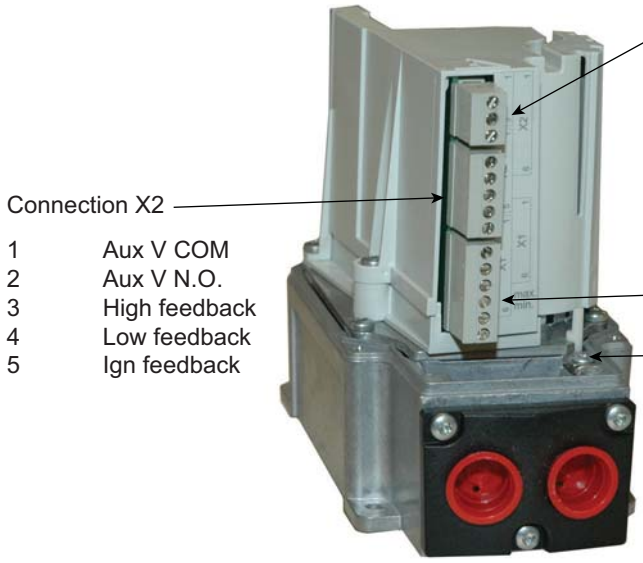

Connector X3

1	Aux VI N.O.
2	Aux VI N.C.
3	Aux VI COM

Connection X2

1	Aux V COM
2	Aux V N.O.
3	High feedback
4	Low feedback
5	Ign feedback

Connector X1

1	Drive to ign
2	Aux IV N.O.
3	Aux IV COM
4	Neutral
5	Drive low/off
6	Drive high

Ground (Protective Earth)

3-Position Step
Basic version with
2 end switches and
4 auxiliary switches

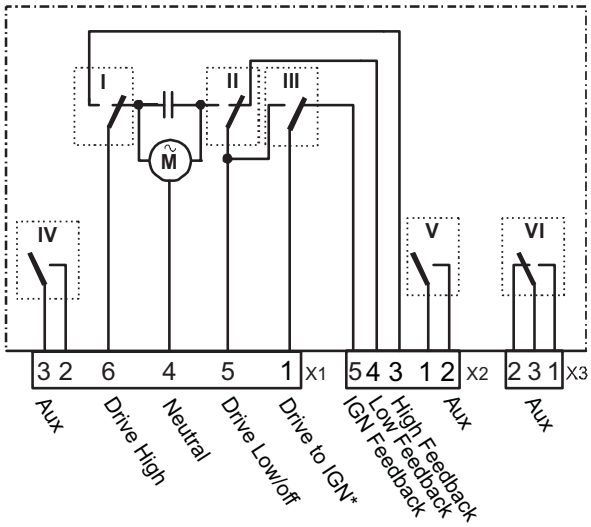

aux	GREEN	VI
aux	BLACK	V
aux	YELLOW	IV
ign	ORANGE	III
low/off	BLUE	II
high	RED	I

2-Position Step
Basic version with
2 end switches,
3 auxiliary switches and
one relay

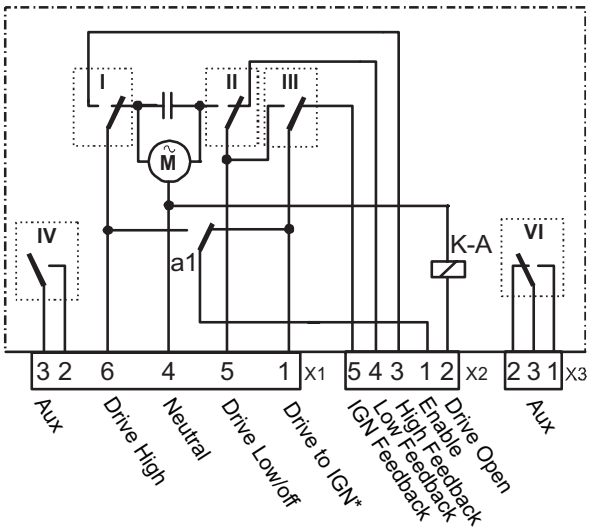

aux	GREEN	VI

aux	YELLOW	IV
ign	ORANGE	III
low/off	BLUE	II
high	RED	I

* Only when driving from high position
ign - ignition

Figure 3.8. Connection Terminals (3-Position & 2-Position Step)

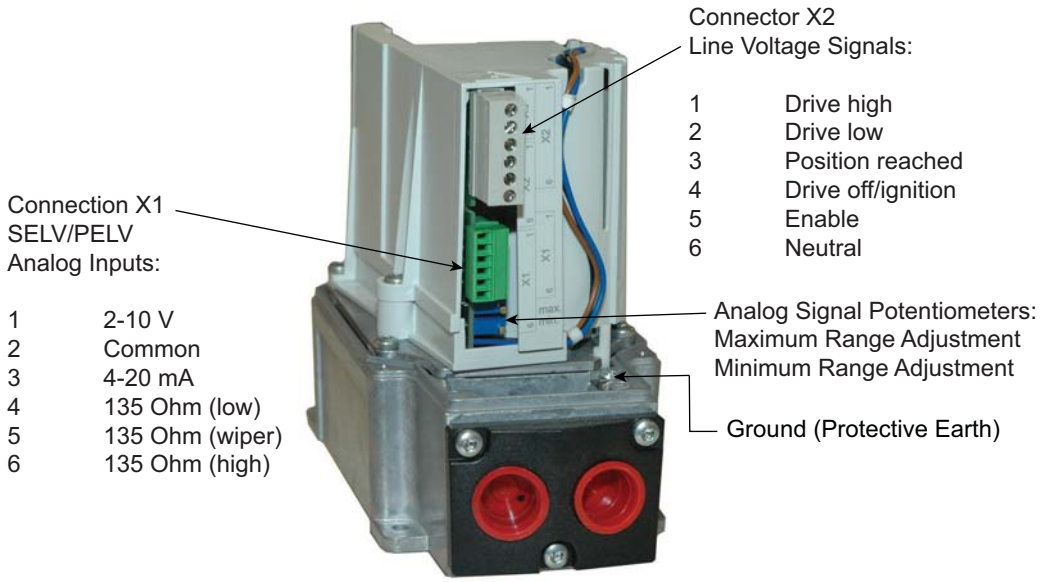

Electronic Version

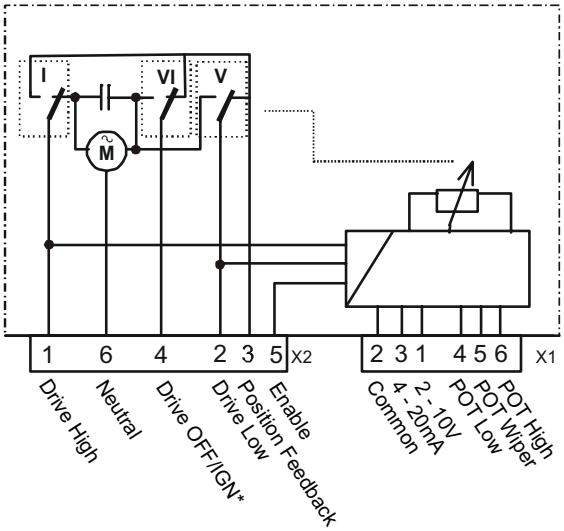

OFF/IGN	GREEN	VI
low	BLACK	V

high	RED	I

* Only when driving from high position
ign - ignition

NOTE: Voltage applied at X2-6 Neutral and X2-5 Enable will power the electronic circuits and allows the analog inputs to drive the actuator. If driving the actuator with the direct voltage connection at X2-1, -2, or -4 then remove power at X2-5 Enable to avoid conflicting drive currents at the motor. SELV or PELV depends on the safety class of the connected devices. For PELV, the device is connected to protective earth (ground).

Figure 3.9. Connection Terminals (Electronic Version)

Cam Positions (Factory Settings)

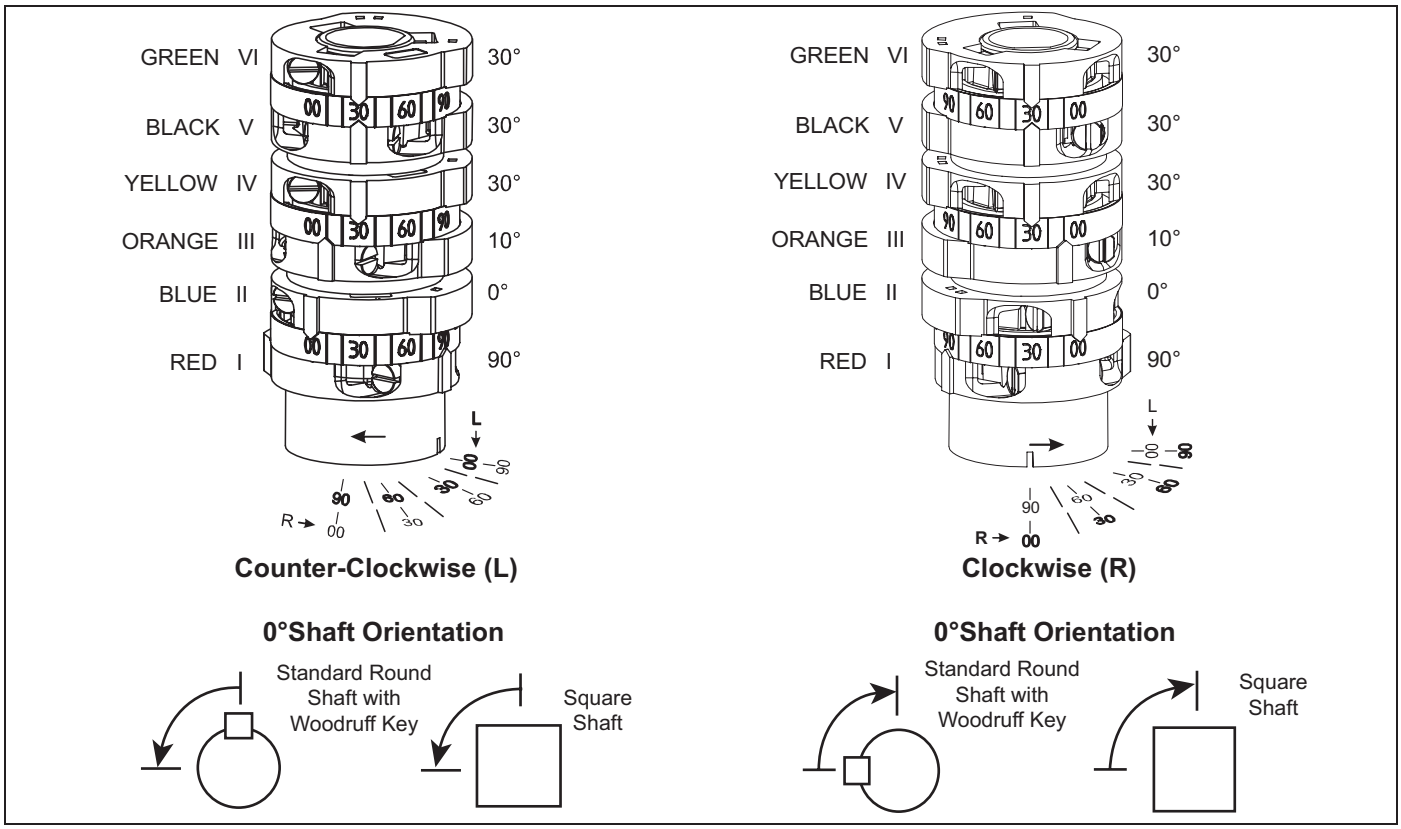

Figure 3.10.

Basic Version, 3-Position Step

Color	Cam Position	Cam	Presetting
RED	Cam I	High-fire	90-degree
BLUE	Cam II	Off / low-fire	0-degree
ORANGE	Cam III	Ignition position	10-degree
YELLOW	Cam IV	AUX switch	30-degree
BLACK	Cam V	AUX switch	30-degree
GREEN	Cam VI	AUX switch	30-degree

Basic Version, 2-Position Step

Color	Cam Position	Cam	Presetting
RED	Cam I	High-fire	90-degree
BLUE	Cam II	Off / low-fire	0-degree
ORANGE	Cam III	Ignition position	10-degree
YELLOW	Cam IV	AUX switch	30-degree
GREEN	Cam VI	AUX switch	30-degree

Electronic Version

Color	Cam Position	Cam	Presetting
RED	Cam I	High-fire	90-degree
BLACK	Cam V	Low-fire	10-degree
GREEN	Cam VI	Off / Ignition	0-degree

Typical Application

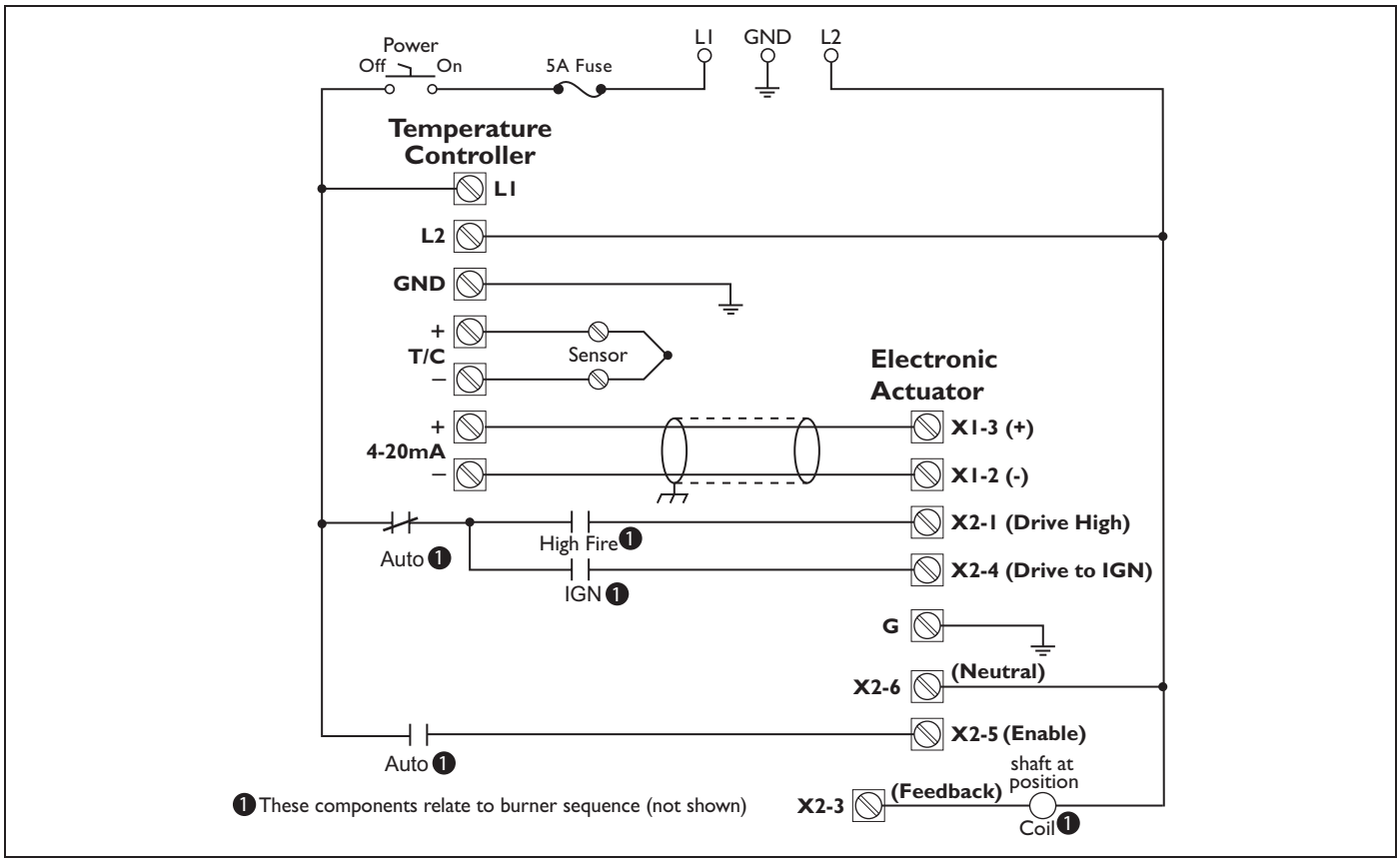

Figure 3.11.

This example shows a method for igniting a burner at a firing rate higher than its minimum run position.

- A "High" relay makes contact during the purge cycle. It is controlled from the flame safeguard or customer control. The actuator drives to the high position as set by CAM I.
- The "High" contact opens after the purge time, and the ignition, "IGN" relay makes contact to drive the actuator to the ignition position as set by CAM VI.
- After the trial for ignition, the normally closed "Auto" relay breaks its contact to remove supply power from the "High" and "IGN" relay contacts.
- A normally open "Auto" relay makes contact to supply power to the enable input X2-5. Then the actuator follows the analog input on X1-2, X1-3.
- The analog modulation is between CAM I and CAM V.

NOTE: The following diagram is an example of how to use the actuator's various inputs and outputs. Some devices shown may be omitted or changed, depending on your application.

Checklist After Installation

1. Confirm the alignment and tightness of all mechanical connections.
2. Inspect the terminal wiring for stray wire strands that might cause a short circuit. Check that the wires are properly inserted into the terminals and are not loose. Reinstall the terminal cover.
3. Apply power and verify that the stroke motion is smooth over its entire range.
4. Record the cam settings for future reference.

WARNING

- **After wiring, inspect the seal and install the cover carefully. Make sure cover is seated properly to seal out water.**

Specifications 4

Parameter	Description	
Operating Voltage	AC 120 V -15% / +10% AC 230 V -15% / +10%	
Operating Frequency	50 to 60 Hz ±6%	
Power Consumption	10 VA	
Duty Cycle, ED	100%	
Operating Angle	Adjustable between 0 and maximum 90° (scale range)	
Mounting Position	Multi-position	
Degree of Protection	IP66 / NEMA 4	
Cable Entry	2 x M16 without thread or 2 x 1/2" NPT thread	
Direction of Rotation	Facing the shaft end: clockwise or counterclockwise, dependent on model	
Torque	10 Nm, depending on the type[1] (Holding torque is 5 Nm)	
Running Time, 90° stroke	30 seconds depending on the type[1]	
Drive Motor	Synchronous motor, stall protected	
Gear Train	Maintenance free gears and bearings	
End and Auxiliary Switches	Type	To DIN 41636
	Switching Voltage	AC 24 to 250 V
	Switching Capacity	1A, 250 VAC 7A, 250 VAC Peak load < 0.5 seconds
Number of End Switches	2	
Number of Auxiliary Switches	Maximum of 4	
Drive Shaft	Factory supplied, not replaceable	
Operating Temperature	-20 to +60 °C (0 to 140 °F)	
Storage Temperature	-40 to +70 °C (-40 to 158 °F)	
Humidity	<95% RH noncondensing	
Weight	Approximately 2 kg	
Materials of Construction	Housing	Die Cast Aluminum
	Cover	Impact-proof and heat resistant plastic

[1] At 60 Hz frequency, running times and torques are about 17% less.

Analog Inputs

Parameter	Description
Linearity	<5%
Control Range	0 to 90°
Voltage Range	DC 2 (0) to 10 V
Voltage Input Impedance	≥ 5 kΩ
Current Range	DC 4 (0) to 20 mA
Current Input Impedance	≤ 500 kΩ
Potentiometer Range	0 to 135 Ω, ± 5%

Wire Size

Cross-sectional area of the power supply lines

Parameter	Description
Line Voltage Terminals	Class 1 Min. AWG 18 Suited for 105°C Max. 2.5mm^2 or AWG 12
Analog Input Terminals	Class 2 Min. AWG 22 Suited for 105°C Max. 1mm^2 or AWG 12

Standards and Certificates

Conformity of EEC directives:

Electomagnetic compatibility EMC (immunity) 2004/108/EC

Low voltage directive 2006/95/RC

Dimensions

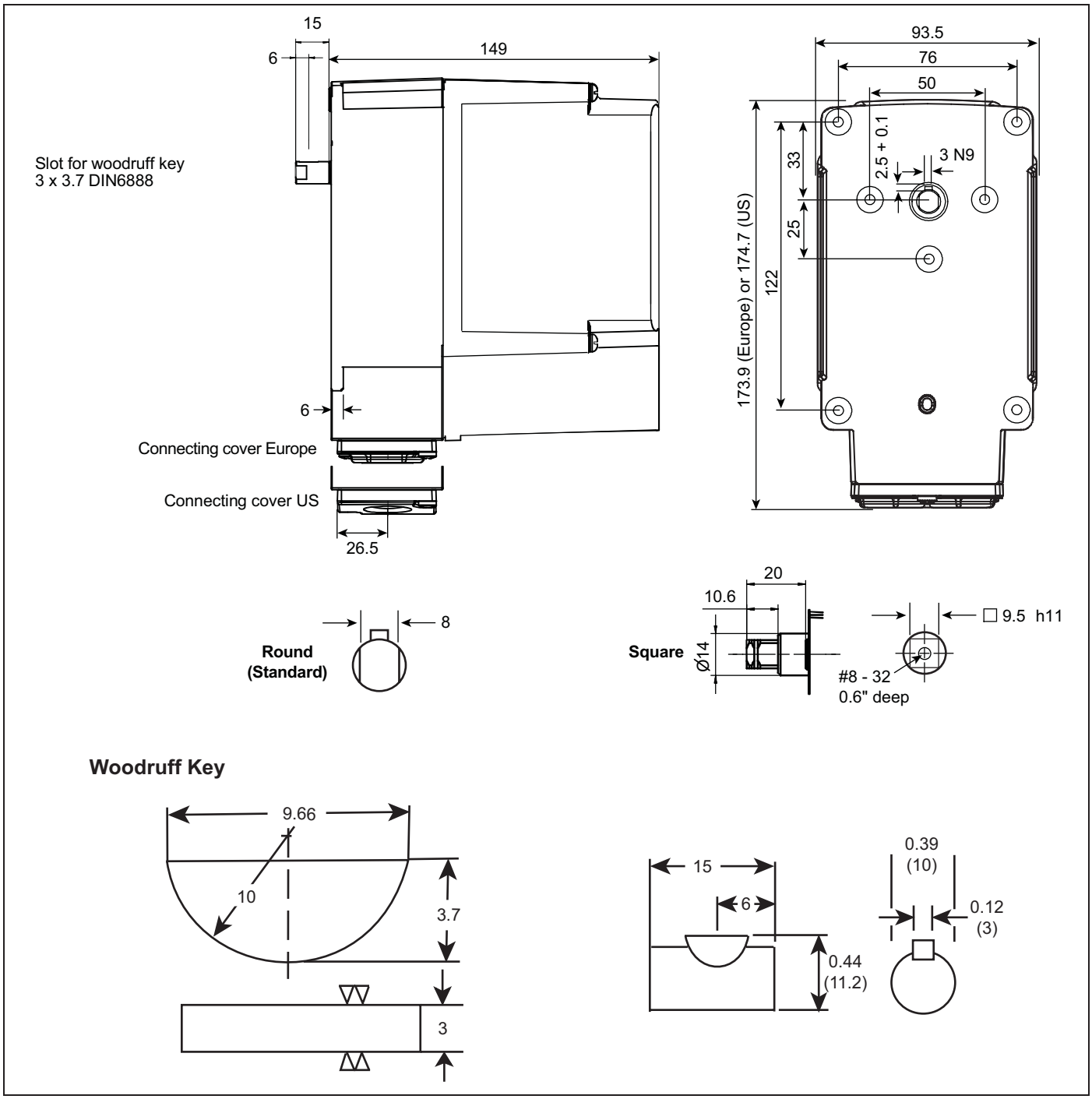

Figure 4.1.

Maintenance & Troubleshooting

5

This section is divided into two parts:

- The first part describes maintenance procedures.
- The second part describes troubleshooting procedures.

Maintenance

Preventative maintenance is the key to a reliable, safe and efficient actuator. The core of any preventative maintenance program is a list of periodic tasks.

NOTE: Monthly and yearly lists are for average intervals. If your environment is dirty, then the intervals may be shorter.

Monthly Checklist

1. Inspect the actuator for physical damage.
2. Inspect the coupling for loose connections.
3. Observe the shaft while moving for smooth operation.

Yearly Checklist

1. Inspect the actuator for physical damage.
2. Inspect the coupling for loose connections.
3. Confirm the cam settings are identical to those originally selected.
4. Drive the actuator to its full clockwise and counterclockwise positions and observe the shaft while moving for smooth operation.

Troubleshooting

Problem	Possible Cause	Solution
Actuator will not move with signal	Stalled motor	Correct mechanical problem.
	Actuator at low or high fire stop	Normal, check cam settings, reverse control signal direction.
	Signal reversed or no signal connection	Refer to wiring.
	No power	Check for proper voltage.
	Bad wiring connection	Check connections and plugs.
	Shaft disengaged	Continue driving until pin K1 engages.
Actuator stays at high	Signal applied to drive high terminal	Check external wiring and control system.
	Electronic Version: More than one analog signal applied to inputs	Check external wiring and control system.

NOTES

Offered By:
Power Equipment Company
2011 Williamsburg Road
Richmond, Virginia 23231
Phone (804) 236-3800
Fax (804) 236-3882

www.peconet.com