Eclipse RatioAir Burners

Model RA0025 - 2000

Technical Information Edition 09.15

Version 3

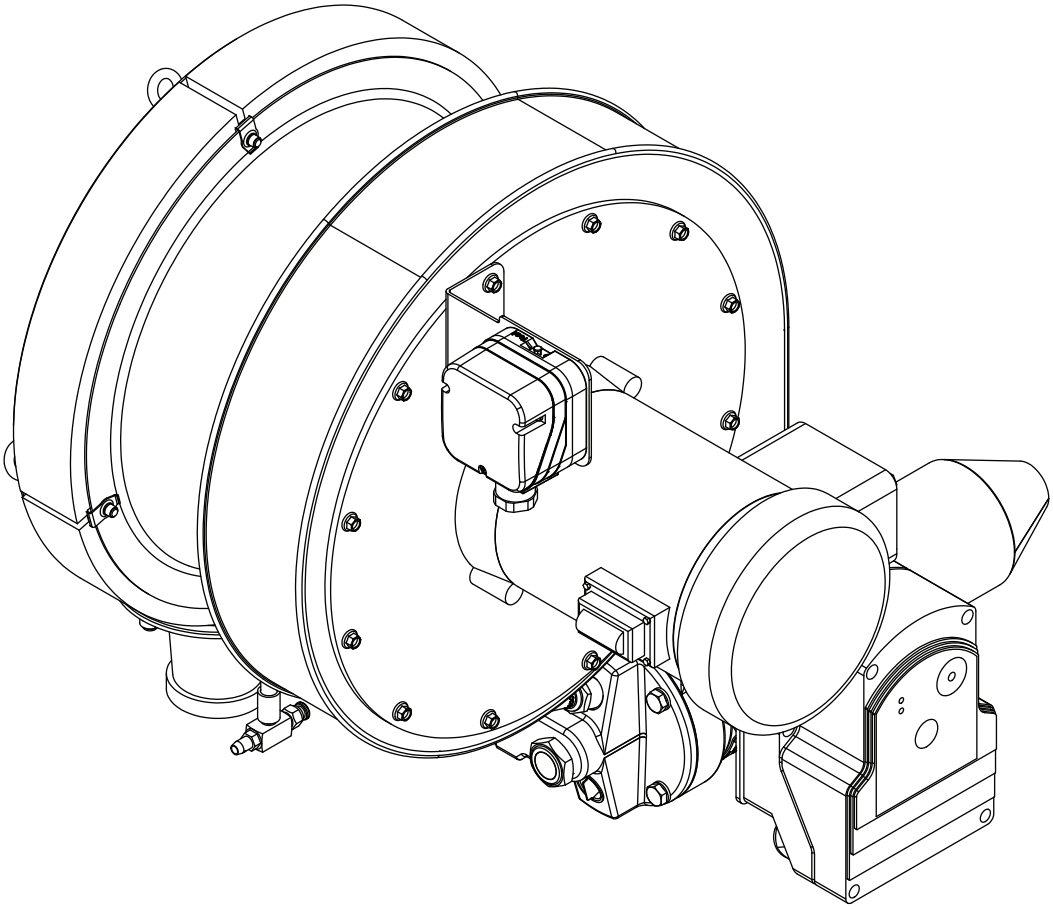

elster
Thermal Solutions

Copyright

Copyright 2007 by Eclipse, inc. All rights reserved worldwide. This publication is protected by federal regulation and shall not be copied, distributed, transmitted, transcribed or translated into any human or computer language, in any form or by any means, to any third parties, without the express written consent of Eclipse, inc.

Disclaimer Notice

In accordance with the manufacturer's policy of continual product improvement, the product presented in this brochure is subject to change without notice or obligation.

The material in this manual is believed adequate for the intended use of the product. If the product is used for purposes other than those specified herein, confirmation of validity and suitability must be obtained. Eclipse warrants that the product itself does not infringe upon any United States patents. No further warranty is expressed or implied.

Liability & Warranty

We have made every effort to make this manual as accurate and complete as possible. Should you find errors or omissions, please bring them to our attention so that we may correct them. In this way we hope to improve our product documentation for the benefit of our customers. Please send your corrections and comments to our Technical Documentation Specialist.

It must be understood that Eclipse's liability for its product, whether due to breach of warranty, negligence, strict liability, or otherwise is limited to the furnishing of replacement parts and Eclipse will not be liable for any other injury, loss, damage or expenses, whether direct or consequential, including but not limited to loss of use, income, or damage to material arising in connection with the sale, installation, use of, inability to use, or the repair or replacement of Eclipse's products.

Any operation expressly prohibited in this manual, any adjustment, or assembly procedures not recommended or authorized in these instructions shall void the warranty.

Document Conventions

There are several special symbols in this document. You must know their meaning and importance.

The explanation of these symbols follows below. Please read it thoroughly.

How To Get Help

If you need help, contact your local Eclipse representative. You can also contact Eclipse at:

1665 Elmwood Rd.
Rockford, Illinois 61103 U.S.A.
Phone: 815-877-3031
Fax: 815-877-3336
http://www.eclipsenet.com

Please have the information on the product label available when contacting the factory so we may better serve you.

ECLIPSE® Innovative Thermal Solutions www.eclipsenet.com
Product Name
Item #
S/N
DD MMM YYYY

⚠	This is the safety alert symbol. It is used to alert you to potential personal injurt hazards. Obey all safety messages that follow this symbol to avoid possible injury or death.
⚠ **DANGER**	Indicates a hazardous situation which, if not avoided, will result in death or serious injury.
⚠ **WARNING**	Indicates a hazardous situation which, if not avoided, could result in death or serious injury.
⚠ **CAUTION**	Indicates a hazardous situation which, if not avoided, could result in minor or moderate injury.
NOTICE	Is used to address practices not related to personal injury.
NOTE	Indicates an important part of text. Read thoroughly.

Table of Contents

Introduction **4**

Product Description 4

Audience 4

RatioAir Documents 4

Purpose 4

Safety **5**

Introduction 5

Safety 5

Capabilities 5

Operator Training 5

Replacement Parts 5

System Design **6**

Design 6

Step 1: Burner Option Selection 6

Step 2: Blower Option Selection 8

Step 3: Control Methodology 9

Step 4: Ignition System 10

Step 5: Flame Monitoring Control System 11

Step 6: Main Gas Shut-Off Valve Train 11

Step 7: Process Temperature Control System 11

Appendix **12**

Conversion Factors 12

Key to System Schematics 12

Introduction 1

Product Description

The RatioAir is a nozzle-mix type burner designed for direct and indirect air heating in a wide range of applications including:

- Industrial Ovens and Furnaces
- Glass Lehrs
- Indirect Fired Air Heaters
- RTO Incinerators
- After Burners
- Galvanizing Ketles
- Waterbath Vaporizers

The burner package includes a combustion air blower and an air/gas ratio regulator to fire over a wide gas turndown range with controlled ratio. RatioAir burners are available with three different outlet tube velocity characteristics (standard, medium and high velocity), and are capable of outlet speeds of 250 ft/s with the medium velocity and 500 ft/s with the high velocity tubes.

The burner is designed for:

- Efficient Ratio Controlled Combustion
- Reliable Burner Operation
- Simple Burner Adjustment
- Direct Spark Ignition
- Multiple Fuel Capability

A wide variety of options and configurations are available due to the modular design of the burner.

Audience

This manual has been written for people who are already familiar with all aspects of a nozzle-mix burner and its add-on components, also referred to as “the burner system”.

These aspects are:

- Design / Selection
- Use
- Maintenance

The audience is expected to have previous experience with this type of equipment.

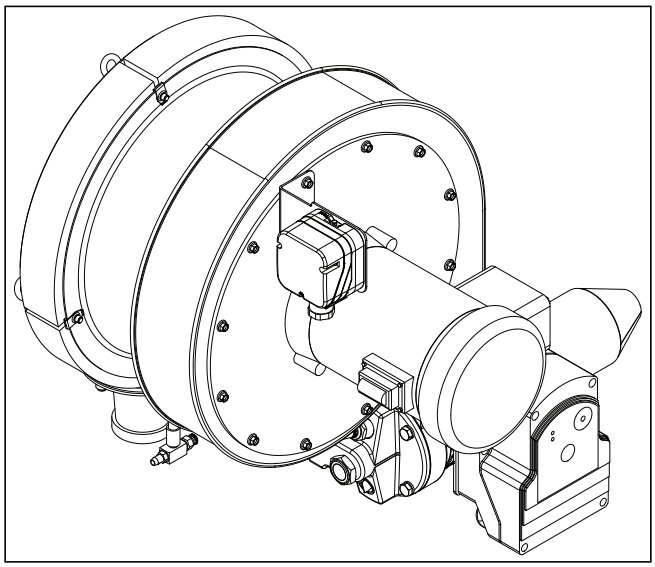

Figure 1.1 RatioAir Burner

RatioAir Documents

Design Guide No. 115

- This document

Datasheet, Series 115

- Available for individual RA models
- Required to complete design and selection

Installation Guide No. 115

- Used with Datasheet to complete installation

Related Documents

- EFE 825 (Combustion Engineering Guide)
- Eclipse Bulletins and Info Guides: 710, 732, 760, 818, 830, 832, 852, 856, 610, 820, 930

Spare Part Documents, Series No. 115

- Recommended replacement part information

Purpose

The purpose of this manual is to ensure that the design of a safe, effective, and trouble-free combustion system is carried out.

Safety

2

Important notices which help provide safe burner operation will be found in this section. To avoid personal injury and damage to the property or facility, the following warnings must be observed. All involved personnel should read this entire manual carefully before attempting to start or operate this system. If any part of the information in this manual is not understood, contact Eclipse before continuing.

Safety Warnings

DANGER

- **The burners, described herein, are designed to mix fuel with air and burn the resulting mixture. All fuel burning devices are capable of producing fires and explosions if improperly applied, installed, adjusted, controlled or maintained.**
- **Do not bypass any safety feature; fire or explosion could result.**
- **Never try to light a burner if it shows signs of damage or malfunction.**

WARNING

- **The burner and duct sections are likely to have HOT surfaces. Always wear the appropriate protective equipment when approaching the burner.**
- **Eclipse products are designed to minimize the use of materials that contain crystalline silica. Examples of these chemicals are: respirable crystalline silica from bricks, cement or other masonry products and respirable refractory ceramic fibers from insulating blankets, boards, or gaskets. Despite these efforts, dust created by sanding, sawing, grinding, cutting and other construction activities could release crystalline silica. Crystalline silica is known to cause cancer, and health risks from the exposure to these chemicals vary depending on the frequency and length of exposure to these chemicals. To reduce the risk, limit exposure to these chemicals, work in a well-ventilated area and wear approved personal protective safety equipment for these chemicals.**

NOTICE

- **This manual provides information regarding the use of these burners for their specific design purpose. Do not deviate from any instructions or application limits described herein without written approval from Eclipse.**

Capabilities

Only qualified personnel, with sufficient mechanical aptitude and experience with combustion equipment, should adjust, maintain or troubleshoot any mechanical or electrical part of this system. Contact Eclipse for any needed commissioning assistance.

Operator Training

The best safety precaution is an alert and trained operator. Train new operators thoroughly and have them demonstrate an adequate understanding of the equipment and its operation. A regular retraining schedule should be administered to ensure operators maintain a high degree of proficiency. Contact Eclipse for any needed site-specific training.

Replacement Parts

Order replacement parts from Eclipse only. All Eclipse approved valves or switches should carry UL, FM, CSA, CGA and/or CE approval where applicable.

System Design 3

Design

The design process is divided into the following steps:

1. **Burner Option Selection Including:**
   - Burner Model / Size
   - Firing Position
   - Burner Configuration
   - Fuel Type
   - Fuel Supply
   - Combustor Type & Material
   - Air Supply
   - Control Motor
   - Limit Switch
   - Loading Line Type
   - Air Pressure Switch
   - Piping Connection
   - Flame Supervision
2. **Blower Option Selection Including:**
   - Power Supply Frequency
   - Pressure and Flow
   - Blower Motor Type
   - Blower Inlet
   - Blower Configuration
3. **Control Methodology Including:**
   - Burner Control
4. **Ignition System Including:**
   - Ignition Transformer
   - Trial for Ignition
   - Ignition Gas Piping
5. **Flame Monitoring Control System Including:**
   - Flame Sensor
   - Flame Monitoring Control
6. **Main Gas Shut-Off Valve Train Including:**
   - Component Selection
   - Valve Train Size
7. **Process Temperature Control System**

Step 1: Burner Option Selection

Step 1 describes how to select burner options to suit an application. Use the RatioAir Price Lists and Datasheets, series 115 when following this selection process.

CAUTION

- **Consult EFE-825 Eclipse Engineering Guide or contact Eclipse if you have special conditions or questions.**

Burner Model / Size Selection

Consider the following when selecting the burner size:

- **Heat Input:** Calculate the required heat input to achieve the required heat balance. The burner combustor option selected will affect available heat output from the burner.
- **Power Supply Frequency:** Burner capacity will vary with power supply frequency (50 Hz or 60 Hz power).
- **Combustion Chamber Pressure:** Consider the effects that large or varying chamber pressures have on burner performance.
- **Altitude:** The maximum burner capacity is reduced by approximately 3% each 1000 feet (300 meters) above sea level.
- **Combustion Air Supply:** Combustion air should be fresh (20.9% O_2) and clean (without particles or corrosives).
- **Combustion Air Temperature:** Changes in air supply temperature can affect the burner capacity. Contact Eclipse if the combustion air temperature exceeds 150°F (65°C).
- **Fuel Type:** Variation in calorific value, specific gravity and WOBBE index will affect burner performance. If any of these parameters change more than ±5% from Figure 3.1 contact Eclipse to check the suitability of the fuel. Performance data, dimensions and specifications are given for each RatioAir in Datasheets 115-1 through 115-11.

Firing Position

- Vertical Down Firing
- Vertical Up Firing
- Horizontal Firing

Burner Configuration

Select configuration.

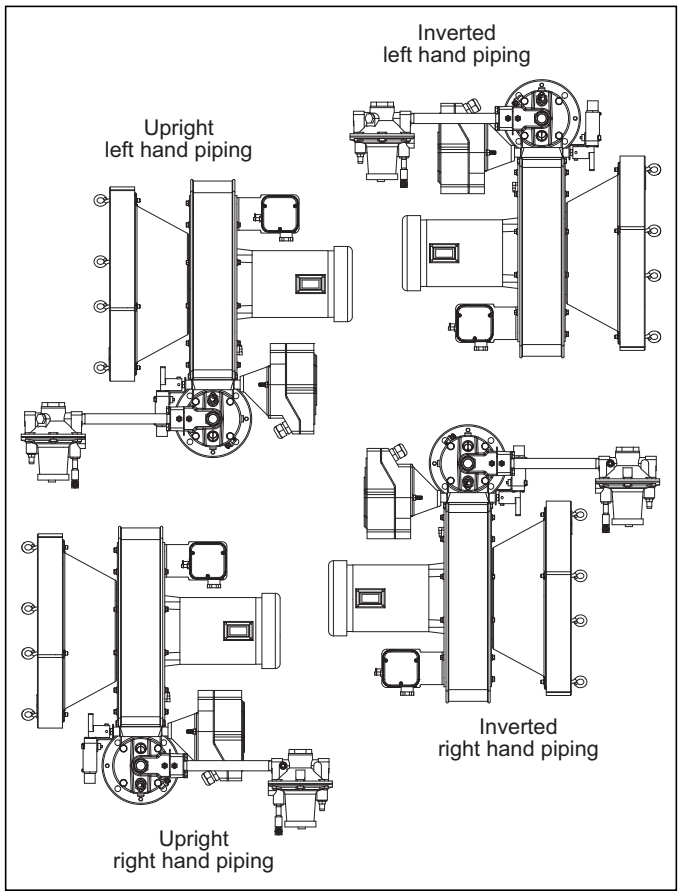

Figure 3.1. Configuration Selection and Motor Orientation Choice

Fuel Type

Table 3.1 Fuel Type

Fuel	Symbol	Gross Heating Value	Specific Gravity	WOBBE Index
Natural Gas	$CH_4$90%+	1000 Btu/ft^3 (40.1 MJ/m^3)	0.60	1290 Btu/ft^3
Propane	C_3H_8	2525 Btu/ft^3 (101.2 MJ/m^3)	1.55	2028 Btu/ft^3
Butane	C_4H_{10}	3330 Btu/ft^3 (133.7 MJ/m^3)	2.09	2303 Btu/ft^3
Btu/ft^3 @ standard conditions (MJ/m^3 @ normal conditions)				

If using an alternative fuel supply, contact Eclipse with an accurate breakdown of the fuel components.

Fuel Supply

Select the turndown required.

The high turndown option includes a ratio regulator with bypass adjustment for lower inputs.

Combustor Type & Material

Select a combustor type based on the application. Low temperature applications use an alloy combustion tube. High temperature applications use a silicon carbide (SiC) tube or a refractory block & holder. See datasheet series 115 for specific temperature ratings. For vertical down-firing applications with block and holder, consult factory.

Air Supply

The RatioAir burner can be ordered with a combustion air blower supplied and mounted directly to the burner body or depending on burner size with a threaded, flanged, or welded inlet to accommodate a remote blower. The remote blower must provide adequate pressure and flow per the appropriate datasheet series 115.

Control Motor

Select a control motor. Kromschroder IC20 actuators are standard on all Eclipse packaged burners. RatioAir burners can be ordered with control motor bracket and mounting hardware only. Customer supplied control motors must conform to these specifications:

- rotation not to exceed 2 rpm
- minimum torque of 25 in-lb (2,8 Nm)
- 90° stroke
- continuous modulating or high/low modulating control
- reversible direction of rotation
- certain applications may require control motors with a limit switch or switches if:
  - the burner capacity is to be limited to fit an application
  - the chamber is to be fired with positive or negative pressure
  - the chamber pressure is outside the range -1" w.c. to +1" w.c. (-2,5 to 2,5 mbar)
  - there is a need to indicate a high and/or low fire air butterfly valve position

Air Butterfly Valve Limiting Switches

Limit switches monitor the position of the integral air butterfly valve. Select high, low, high and low, or no limit switch option. Proper selection is based on preference, control system, and local code.

Loading Line Type

All RatioAir burners have the option of plastic, flexible braided stainless steel or rigid stainless tube loading line. Selection depends on application and environment.

Air Pressure Switch

The air pressure switch provides a signal to the monitoring system when there is not enough air pressure from the blower. If a switch is selected, it will be factory mounted.

WARNING

- **Eclipse supports the NFPA regulation requiring, as a minimum standard for main gas shut-off systems, the use of an air pressure switch in conjunction with other system components.**

Gas Pipe Connection

Select the gas pipe connection (pipe thread type).

The piping, burner gas inlet, and ratio regulator are threaded using the customer selected pipe thread option.

Flame Supervision

Determine if a flame rod or an ultraviolet (UV) scanner will be required. Flame rods are available on model RA0025, RA0040, RA0075 and RA0100 burners with alloy or SiC tubes. A flamerod can also be used on RA0200 burners but with upright left hand piping or inverted right hand piping configurations only. All other options and models require UV scanners. If a UV scanner is required, it must be ordered separately.

NOTE: Some flame monitoring devices do not work with alternative fuels. Consult Eclipse for assistance when selecting flame monitoring equipment for alternative fuels.

See Step 5 for additional information on flame supervision selection.

WARNING

- **A UV scanner could possibly detect another burner's flame if it is in the line of sight, and falsely indicate flame presence.**

Step 2: Blower Option Selection

Standard blower options are listed in datasheet series 115, additional blower options are available through Eclipse. Price and leadtime may vary.

Power Supply Frequency

Select the 50Hz or 60Hz option. The 50Hz blower motors have IEC frames and are CE marked. The 60Hz motors have NEMA frames.

Pressure & Flow

Eclipse offers SMJ blowers for remote blower applications. The RatioAir burner can be ordered with a combustion air blower supplied and mounted directly to the burner body or with a threaded, flanged, or welded inlet to accommodate a remote blower. Remote blower must provide adequate pressure and flow per the appropriate datasheet series 115.

Blower Motor Type

Motor types include various options: voltages, single or three phase, TEFC or automotive duty enclosures.

Blower Inlet

When selecting an inlet, consider the following:

- amount and size of particles in the air
- sound level requirements
- space limitations
- cleanliness requirements of the process

Motor Orientation

Right-hand blower motor orientation is standard. If left-hand blower motor orientation is required, contact factory.

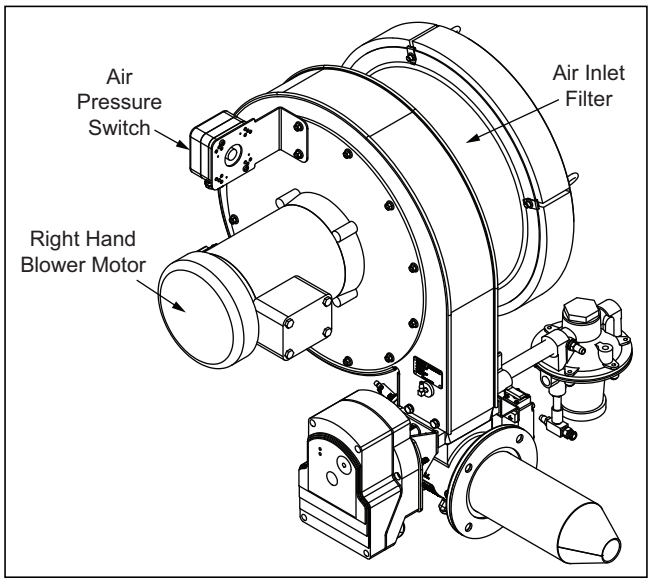

Figure 3.2. Burner Configuration & Motor Orientation Choice

Step 3: Control Methodology

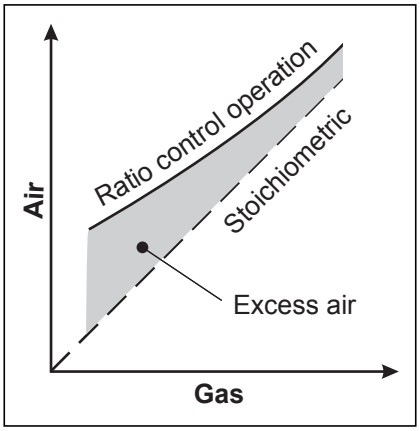

Figure 3.3. Air : Gas Flow

All standard RatioAir burners are designed for:

- air:gas ratio controlled combustion
- 10 - 15% excess air at high fire
- higher excess air at low fire

Burner Control

RatioAir burners come with a ratio regulator that maintains the air:gas ratio, see Figure 3.3.

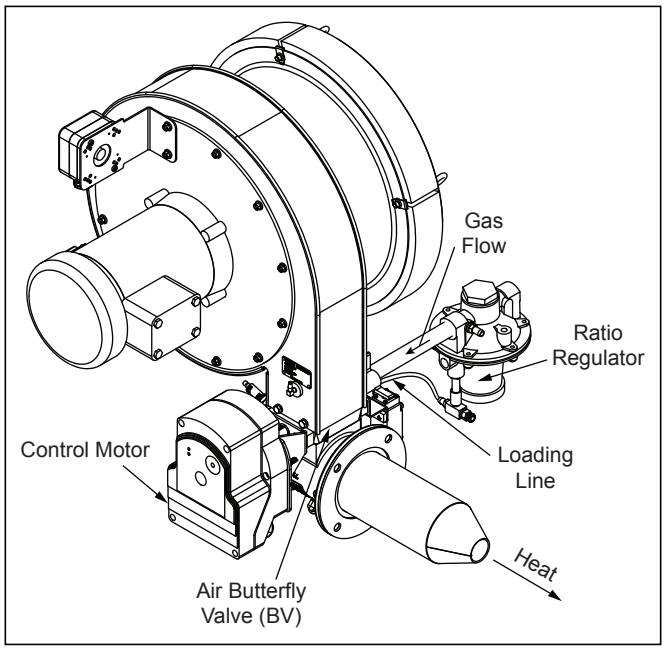

Figure 3.4. Basic Burner Components

- A control signal is sent from a process temperature controller (sold separately) to the control motor. (Refer to Bulletin 818C or contact Eclipse for further information on temperature controllers.)

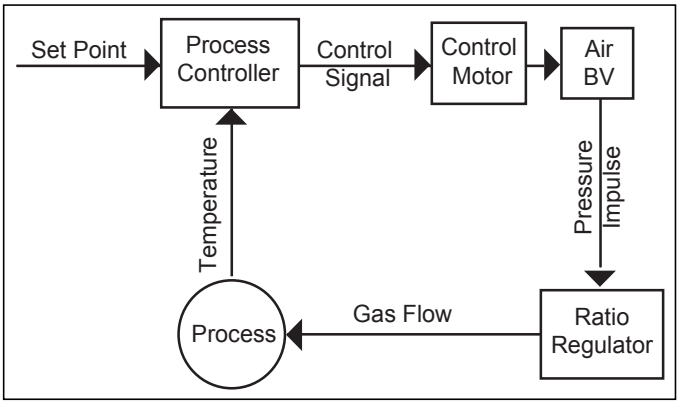

Figure 3.5. Basic Control Loop

- The control motor modulates the air butterfly valve (BV) which controls the combustion air flow.
- Air pressure in the burner body sends an impulse down the loading line to the ratio regulator.
- The ratio regulator controls the gas flow in proportion to the air flow.

WARNING

- **Do not use other control methods, such as fixed-air control, or alter the ratio regulator or burner piping without prior approval from Eclipse.**

Step 4: Ignition System

Ignition Transformer

For the ignition system, use a transformer with:

- secondary voltage 6,000 to 8,000 VAC
- minimum secondary current 0.02 amps
- full wave output

DO NOT USE the following:

- twin outlet
- distributor type
- electronic type

Trial for Ignition

It is recommended that low fire start be used. However, under certain circumstances RatioAir burners are capable of direct spark ignition at higher gas inputs.

Most local safety codes and insurance requirements limit the maximum trial for ignition time (the time it takes for a burner to ignite). These requirements vary from one location to another; check your local codes and comply to the strictest codes applicable.

The time it takes for a burner to ignite depends on the following:

- the distance between the gas shut-off valve and the burner
- the air:gas ratio
- the gas flow conditions at start-up

The possibility exists where the low fire settings are insufficient to ignite the burner within the maximum trial for ignition time. The following options must be considered under these conditions:

- start at higher gas input levels
- resize and/or relocate the gas controls
- use bypass start gas

Ignition Gas Piping

RatioAir burners are capable of ignition with either low fire or bypass start gas.

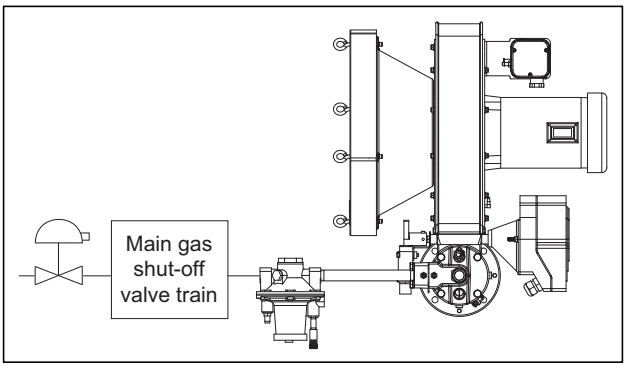

Figure 3.6. Low Fire Start

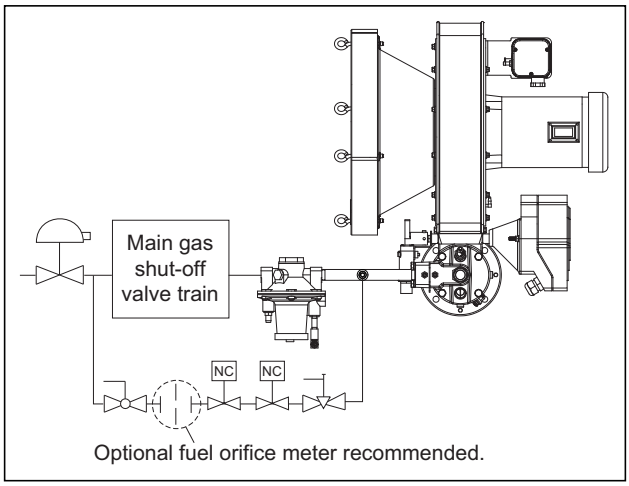

Figure 3.7. Pilot Start (Optional)

An optional fuel orifice meter connected in the start gas piping can simplify start-up and adjustment. To start the burner at the lowest possible gas input, select a fuel orifice meter for 5" to 10" w.c. pressure drop when the gas flow is at the burner's rated low fire.

Step 5: Flame Monitoring Control System

The flame monitoring control system consists of two main components:

- Flame Sensor
- Flame Monitoring Control

Flame Sensor

Two types can be used on a RatioAir Burner:

- Flame rod
- UV scanner

Flame rods are available on model RA0025, RA0040, RA0075 and RA0100 burners with alloy or SiC tubes. A flame rod can also be used on RA0200 burners but with upright left hand piping or inverted right hand piping configurations only. Further information about flame rods can be found in:

- Info Guide 832

A UV scanner can be used on all RatioAir Burner sizes. The UC scanner must be compatible to the flame monitoring control that is used. Refer to the manual of your selected control for proper selection of the scanner.

Flame Monitoring Control

The flame monitoring control is the equipment that processes the signal from the flame sensor and controls the start-up and shut-down sequences.

For flame monitoring control you may select several options:

- flame monitoring control for each burner: if one burner goes down, only that burner will be shut off
- multiple burner flame monitoring control: if one burner goes down, all burners will be shut off

NOTICE

- **If other controls are considered, contact Eclipse to determine how burner performance may be affected. Flame monitoring controls that have lower sensitivity flame detecting circuits may limit burner turndown and change the requirements for ignition. Flame monitoring controls that stop the spark as soon as a signal is detected may prevent establishment of flame, particularly when using UV scanners. The flame monitoring control must maintain the spark for a fixed time interval that is long enough for ignition.**

DO NOT USE the following:

- Flame monitoring relays which interrupt the trial for ignition when the flame is detected.
- Flame sensors which supply a weak signal.
- Flame monitoring relays with low sensitivity.

Step 6: Main Gas Shut-Off Valve Train

Component Selection

Eclipse can help in the design of a main gas shut-off valve train that satisfies the customer and complies with all local safety standards and codes set by the authorities within that jurisdiction. Contact Eclipse for further information.

NOTE: Eclipse supports NFPA regulations (two gas shut-off valves as a minimum standard for main gas shut-off systems).

Valve Train Size

Fuel pressure supplied to the ratio regulator inlet must be within the range specified in the RatioAir datasheet. The valve train should be sized sufficiently to provide the specified pressure.

⚠ WARNING

- **Do not operate RatioAir burners with gas inlet pressure less than the minimum listed on the RatioAir datasheet. Lower gas inlet pressure may cause the ratio regulator to remain fully open at lower inputs as the burner transitions from low to high fire. This can result in the possible accumulation of unburned fuel in the burner which, in extreme situations, could cause a fire or an explosion.**

Step 7: Process Temp Control System

Consult Eclipse

The process temperature control system is used to control and monitor the temperature of the system. There is a wide variety of control and measuring equipment available.

For details, please contact Eclipse.

Appendix

Conversion Factors

Metric to English

From	To	Multiply By
actual cubic meter/h (am³/h)	actual cubic foot/h (acfh)	35.31
normal cubic meter/h (Nm³/h)	standard cubic foot /h (scfh)	38.04
degrees Celsius (°C)	degrees Fahrenheit (°F)	(°C x 9/5) + 32
kilogram (kg)	pound (lb)	2.205
kilowatt (kW)	Btu/h	3415
meter (m)	foot (ft)	3.281
millibar (mbar)	inches water column ("w.c.)	0.402
millibar (mbar)	pounds/sq in (psi)	14.5×10^{-3}
millimeter (mm)	inch (in)	3.94×10^{-2}
MJ/Nm³	Btu/ft³ (standard)	26.86

Metric to Metric

From	To	Multiply By
kiloPascals (kPa)	millibar (mbar)	10
meter (m)	millimeter (mm)	1000
millibar (mbar)	kiloPascals (kPa)	0.1
millimeter (mm)	meter (m)	0.001

English to Metric

From	To	Multiply By
actual cubic foot/h (acfh)	actual cubic meter/h (am³/h)	2.832×10^{-2}
standard cubic foot /h (scfh)	normal cubic meter/h (Nm³/h)	2.629×10^{-2}
degrees Fahrenheit (°F)	degrees Celsius (°C)	(°F - 32) x 5/9
pound (lb)	kilogram (kg)	0.454
Btu/h	kilowatt (kW)	0.293×10^{-3}
foot (ft)	meter (m)	0.3048
inches water column ("w.c.)	millibar (mbar)	2.489
pounds/sq in (psi)	millibar (mbar)	68.95
inch (in)	millimeter (mm)	25.4
Btu/ft³ (standard)	MJ/Nm³	37.2×10^{-3}

System Schematics

Symbol	Appearance	Name	Remarks	Bulletin/ Info Guide
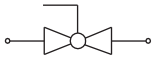	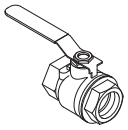	Gas Cock	Gas cocks are used to manually shut off the gas supply.	710
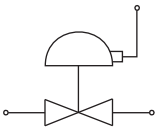	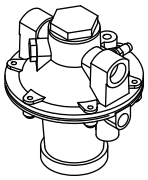	Ratio Regulator	A ratio regulator is used to control the air/gas ratio. The ratio regulator is a sealed unit that adjusts the gas pressure in ratio with the air pressure. To do this, it measures the air pressure with a pressure sensing line, the impulse line. This impulse line is connected between the top of the ratio regulator and the burner body.	
Main Gas Shut-Off Valve Train		Main Gas Shut-Off Valve Train	Eclipse strongly endorses NFPA as a minimum.	790/791
Pilot Gas Shut-Off Valve Train		Pilot Gas Valve Train	Eclipse strongly endorses NFPA as a minimum.	790/791
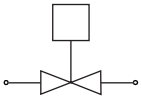	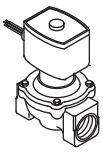	Automatic Shut-Off Valve	Shut-off valves are used to automatically shut off the gas supply on a gas system or a burner.	760
		Orifice Meter	Orifice meters are used to measure flow.	930
	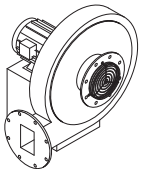	Combustion Air Blower	The combustion air blower provides the combustion air to the burner(s).	610

Symbol	Appearance	Name	Remarks	Bulletin/ Info Guide
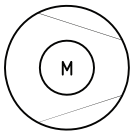	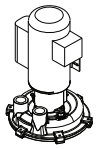	Hermetic Booster	Booster is used to increase gas pressure.	620
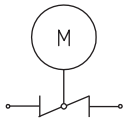	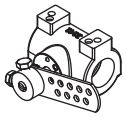	Automatic Butterfly Valve	Automatic butterfly valves are typically used to set the output of the system.	720
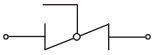	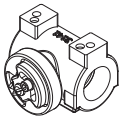	Manual Butterfly Valve	Manual butterfly valves are used to balance the air or gas flow at each burner.	720
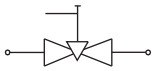		Adjustable Limiting Orifice	Adjustable limiting orifices are used for fine adjustment of gas flow.	728/730
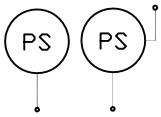		Pressure Switch	A switch activated by rise or fall in pressure. A manual reset version requires pushing a button to transfer the contacts when the pressure set point is satisfied.	840
		Pressure Gauge	A device to indicate pressure.	940
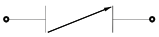		Check Valve	A check valve permits flow only in one direction and is used to prevent back flow of gas.	780
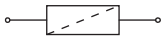	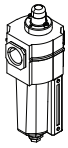	Strainer	A strainer traps sediment to prevent blockage of sensitive components downstream.	
		Flexible Connector	Flexible connectors isolate components from vibration, mechanical, and thermal stresses.	
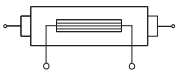	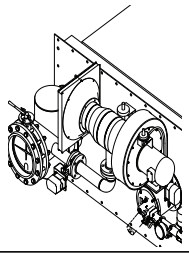	Heat Exchanger	Heat exchangers transfer heat from one medium to another.	500
		Pressure Taps	Pressure taps measure static pressure.	

Notes

© Eclipse, Inc. All Rights Reserved