# US FURNACES LLC MAX 4000

# OPERATION AND MAINTENANCE MANUAL

# TABLE OF CONTENTS


SOP, OM&M PLANS……SECTION 1

ECLIPSE BURNERS……SECTION 2

FLAME SAFETY……SECTION 3

GAS VALVES & PRESURE SWTICHES……SECTION 4

TEMPERATURE CONTROLS……SECTION 5

TEMPERATURE CONTROL ACTUATOR……SECTION 6

DRAFT CONTROL……SECTION 7

REMOTE CONTROL……SECTION 8

HYDRAULICS……SECTION 9

TIMERS, OVERLOADS, CONTACTS, RELAYS……SECTION 10

DATA LOGGER……SECTION 11

DAILY OPERATIONS LOG SHEET……SECTION 12

OPERATORS TRAINING CERTIFICATE……SECTION 13


US FURNACES, LLC MAX 4000




Recycling Services International

# SECTION 1
# SOP, OM&M PLANS

US FURNACES, LLC MAX 4000

# US Furnaces Max 4000
# Operation, Maintenance and Monitoring Plan

## Complete Operating Instructions (SOP)

**Turn power and main gas valves on and record the gas meter reading.**
**Raise all doors and inspect all chambers.**

1. Start combustion blowers. Start "Primary 1", "Primary 2" "Holding chamber" and "Afterburner burners" by turning the selector switches to the on position. There is a 2 minute built in purge prior to ignition. Observe that each burner did in fact ignite by observing burner on lights and physically observing the flame by sight.
2. Close all doors.
3. Prepare work area for production day.
4. Install the afterburner data logger.
5. Select material to be charged and load on the table. Note: Refer to "Items not to be charged into the chamber" as described by the permit, i.e. magnesium, cadmium, radioactive, PCB's, PVC's, etc. materials.
6. When the afterburner temperature has reached at least 1600 deg. F and the primary and holding chamber have reached the desired set point the furnace may be charged.
7. The afterburner temperature is recorded as 15-minute block averages and also 3-hour block averages by a data logger.
8. Turn the "Hi – Low Fire" switch to low. Raise the primary charge door and push material into the chamber.
9. Close the door and observe the temperature controls. Note: Specifically observe that the afterburner chamber did not drop below 1600 deg. F. If said chamber does drop below the required temperature, the set point will need to be raised to prevent a violation during the time the door is open. The standard set point is 1650 deg. F to prevent a violation.
10. Record the charge time, material type, afterburner temperature and the size of the load in the "Daily Operators Log".

**Note: This unit is equipped with an interlock system that prevents the primary charge door from being opened should the afterburner temperature drop below 1600 degrees. There is however, a manual override switch which will allow the door to operate under any temperature condition. This mode is primarily used for maintenance only. A red light on the control panel indicates that the interlock is in the manual mode. Do not charge material into the chamber if the red interlock light is illuminated.**

Turn the "Hi-Low Fire" switch to high after most of the combustible material has burned off (if automatic high fire delay, turn to high as soon as door is closed). Stir and rake the material as required by the material being processed. Average stir time is 10 to 15 minutes after charging the load. An additional stir and preliminary rake is usually required within 5 to 10 minutes. Average final rake out time is 25 to 40 minutes after charging. Record all stir and rake times on the "Daily Operators Log".

11. Observe temperature controls throughout the operating day to assure proper operation of all chambers.
12. Observe the exit of the stack for emissions after each charge and make the proper adjustments to the draft controls if necessary.
13. Drain the holding chamber as necessary. Note: Follow all required safety procedures during the draining of the holding chamber.
14. When process day is complete, turn off all burners and leave the combustion fans on until the temperature has dropped below 500 deg. F.
15. Turn off the main gas valve.
16. Clean all chambers thoroughly.
17. Record the weight of material processed on the daily log sheet.

**Spare Parts On Hand**

Refer to the recommended spare parts list for items that need to be in your inventory. Add a spare Tc-hr data logger to that list. Keep an inventory list of parts on hand.

**Maintenance Schedule**

Furnace is to be maintained and records kept of the following:

1. Daily & Weekly Inspection and Maintenance
   Daily- Grease Sow Mold Wheels (if applicable).

a) Inspect all chambers for refractory damage and repair as needed.
b) Inspect door raise cables for wear and replace if needed.
c) Inspect burner tube areas for blockage.
d) Clean blower fans.
e) Adjust door seal (adjust the next day after replacing)
f) Inspect all hydraulic hoses, connections, seals, and cable sheaves (rollers).

2. Bi-weekly Inspection and Maintenance

a) Remove and clean igniters.
b) Inspect ignition cable and replace when necessary.
c) Clean UV Scanners.
d) Grease door raise bearings and draft control pillow block bearings.
e) Oil any unsealed type motor bearings.

3. Monthly Inspection and Maintenance

a) Inspect and repair any structural area of the furnace.
b) Inspect and/or repair tap-out hole and spout.
c) Inspect and repair afterburner and stack refractory.
d) Perform leak test on all gas lines.

4. Semi-Annual Inspection and Maintenance if required (to be performed by RSI)

a) Calibrate all controls and data logger.
b) Inspect afterburner structural refractory areas.
c) Inspect structural areas.
d) Inspect, clean and service all burners.
e) Adjust all burner settings.
f) Observe overall furnace operation.
g) Check data logger records.
h) Operators training refresher course is performed and training certificates are issued where appropriate.

5. Annual Inspection and Maintenance (to be performed by RSI)

a) Inspect all burners, pilot light assemblies, and pilot light sensing devices for proper operation.
b) Clean the pilot light sensors.
c) Inspect the combustion air for proper adjustment.
d) Inspect baffles and other internal structures to ensure their structural integrity.
e) Inspect dampers, fans, and blowers for proper operation.
f) Inspect for proper sealing.
g) Inspect motors for proper operation.
h) Inspect the refractory lining of the combustion chamber. Clean and replace the refractory lining as necessary.
i) Inspect the shell of the afterburner for corrosion and hot spots.
j) For the burn cycle that follows the inspection, document the proper operation of the afterburner. Document adjustments to the afterburner.
k) Verify that the afterburner is in good operating condition.
l) Follow the operation, maintenance and monitoring plan when making repairs.

**Monitoring**

1. Afterburner temperature is recorded as 15-minute block averages and also3-hour block averages by a data logger.
2. Retain data logger floppy discs for five (5) years.
3. Manually record the temperature on the Daily Operators Log when recording the charge time and material.
4. Maintain a log of repairs performed and any periods of visible emissions.
5. If the temperature goes below 1600°F in the afterburner, follow the procedures in the Startup, Shutdown and Malfunction Plan, including completing the Malfunction Report with specifics on the date and time of emissions exceedance and corrective action taken.

# Recycling Services International

**Qualified Reclaiming Furnace Specialists**

Aluminum, Copper, Precious Metal, & Transformer Furnaces

Pollution Control Upgrades and Consultation www.recyclingfurnaces.com


## US FURNACES MAX 4000 RECOMMENDED SPARE PARTS LIST

1 ea. Variflame Single Burner Monitoring System for UV Scanner
1 ea. Variflame Single Burner Monitoring System for Flame Rod
1 ea. Eclipse straight UV Scanner
1 ea. Eclipse Therm-air Flame Rod
1 ea. Eclipse Ratio Air Ignition Plug
1 ea. Eclipse Therm-air Ignition Plug
1 ea. Eclipse 423-5 Actuator Motor
1 ea. Shimaden SR- 93 Control w/ alarm 4 to 20 mA output
1 ea. Dungs Air Flow Switch
1 ea. Dungs Low Gas Pressure Switch
1 ea. Dungs High Gas Pressure Switch
1 ea. Pyromation Type K Single Element Head & Probe 12" Long
1 ea. Pyromation Type K Double Element Head & Probe 12" Long
1 ea. Pyromation Type K Single Element Head & Probe 14" Long
1ea. Cuttler Hammer N/O-N/C Contact block
1 ea. Ignition Transformer
50 ft. Tadpole door seal
2 ea. ATDR 15 AMP Fuses
2 ea. ATDR 10 AMP Fuses
2 ea. AGC-1 ½ AMP Fuses
3 ea. Main Disconnect Fuses for 3-phase motors (from your local supplier)
1 ea. Data Logger


20 Roosevelt Blvd. Cohoes, NY 12047

Ph: 800-737-4127 Fax: 518-233-0006 Mobile: 518-424-1168 e-mail: Rsidave@aol.com

# US FURNACES MAX 4000

## Startup, Shutdown and Malfunction Plan

### Startup

1. Record the gas meter reading before starting the furnace.
2. Visually inspect furnace for any broken equipment or items in need of repair.
3. Turn furnace primary holding and afterburners on.
4. Allow for afterburner termperature to reach 1600° F.
5. Begin loading scrap alumimum in the primary chamber, not exceeding permit limits.

### Shutdown

1. After molten aluminum is poured into molds for the day, turn off furnaces for the primary, holding and afterburners.
2. Record the gas meter reading after turning off furnace.
3. After primary chamber has cooled, remove all none aluminum metals.
4. Weigh, number and record all molds poured.

### Complete Operating Instructions (SOP)

**Turn power and main gas valves on and record the gas meter reading.**
**Raise all doors and inspect all chambers.**

1. Start combustion blowers. Start "Primary 1", "Primary 2" "Holding chamber 1", "Holding chamber 2" and "Afterburner burners" by turning the selector switches to the on position. Observe that each burner did in fact ignite by observing burner on lights and physically observing the flame by site.
2. Close all doors.
3. Prepare work area for production day.
4. Install the afterburner data logger.
5. Select material to be charged and load on the table. Note: Refer to "Items not to be charged into the chamber" as described by the permit, i.e. magnesium, cadmium, radioactive, PCB's, PVC's, etc. materials.
6. When the afterburner temperature has reached at least 1600 deg. F and the primary and holding chamber have reached the desired set point the furnace may be charged.
7. The afterburner temperature is recorded as 15-minute block averages and also 3-hour block averages by a data logger.
8. Turn the "Hi – Low Fire" switch to low. Raise the primary charge door and push material into the chamber.
9. Close the door and observe the temperature controls. Note: Specifically observe that the afterburner chamber did not drop below 1600 deg. F. If said chamber does

drop below the required temperature, the set point will need to be raised to prevent a violation during the time the door is open. The standard set point is 1650 deg. F to prevent a violation.

10. Record the charge time, material type, afterburner temperature and the size of the load in the "Daily Operators Log".
11. Turn the "Hi-Low Fire" switch to high after most of the combustible material has burned off. Stir and rake the material as required by the material being processed. Average stir time is 10 to 15 minutes after charging the load. An additional stir and preliminary rake is usually required within 5 to 10 minutes. Average final rake out time is 25 to 40 minutes after charging. Record all stir and rake times on the "Daily Operators Log".
12. Observe temperature controls throughout the operating day to assure proper operation of all chambers.
13. Observe the exit of the stack for emissions after each charge and make the proper adjustments to the draft controls if necessary.
14. Drain the holding chamber as necessary. Note: Follow all required safety procedures during the draining of the holding chamber.
15. When process day is complete, turn off all burners and leave the combustion fans on until the temperature has dropped below 500 deg. F.
16. Turn off the main gas valve.
17. Clean all chambers thoroughly.
18. Record the weight of material processed on the daily log sheet.

**Possible Malfunctions and Corrective Actions**

For all malfunctions:

- Record the date and time the malfunction began and ended in the Malfunction Log.
- Record the corrective actions taken including the date and time the corrective action(s) began and when it was completed.

1. Burner will not light or stay lit and or chamber will not reach set-point temperature:
   a) Check that combustion blower is on and the airflow switch has closed to allow line voltage to the flame safety device. If blower is not operating check fuses or circuit breakers. If voltage is supplied to the motor and still does not work, replace the motor.
   b) Check flame safety relays for proper operation and replace if necessary.
   c) Check flame rod for proper operation and clean or replace if necessary.
   d) Check ignition electrode for proper operation and clean or replace if necessary.
   e) Check reset button on flame safety device for proper operation.
   f) Check that the proper gas supply is present and all valves are open.

2. Control does not display the temperature:
   a) Check fuse and power to the control.

b) If there is power at the control and still no temperature readout, perform the following test: Remove "positive" and "negative" thermocouple leads from the back of the control. Install a jumper wire between the terminals that the wire was removed from. Observe the digital display for an ambient temperature display. If the display is present refer to item c.
c) Remove temperature probe and remove the element from the probe housing. Inspect the element for signs of damage or breaks. Check housing for pitting or burnout. Replace damaged items if necessary.
d) If there is still no temperature display after following items a, b, & c instructions, replace and program a new temperature control.
e) Do not operate the sweat furnace until the new data logger is installed and operational.

3. Data logger did not record temperatures properly or no readings whatsoever.
   a) Observe the afterburner control temperature readout. If no digital display is present, follow the instruction for problem number 2. Note that the afterburner temperature probe has a double element, one for the control and one for the data logger.
   b) Check all connections from the probe to the data logger.
   c) Refer to the "Daily Operations Log" to see that furnace was operating during the temperature recording period.
   d) Check that the data logger was "Started" when connected to the computer using the Omni Log software management program.
   e) Check logger while connected to the computer for proper temperature range and type (as in C or F).
   f) Check internal battery power while connected to the computer.
   g) Program and install. Run the logger for a two hour test. Remove logger and download information to check for proper operation. Reinstall logger.
   h) Program and install the backup logger if necessary.

4. Visible emissions are present out of the stack.
   a) Turn "Hi-Low" switch to the low position.
   b) Turn the primary burners to the off position if smoke is still present.
   c) Open the afterburner draft door to a 4" opening. Note: Close the afterburner draft door when combustible material is not present to prevent over cooling of the afterburner.
   d) Check material to find the source of excessive emissions and remove from all future charges.
   e) Record the time and duration of excessive emissions in the "Daily Operators Log".
   f) Note and record the afterburner temperature in said log.

5. Data logger records values less than 1600°F.
   a) Noticed by the operator reading the digital temperature at the controller.
   b) Could occur due to a blown fuse in the burner or low air flow in the burner.

c) Follow the corrective actions under item 1 above.
d) Record the corrective action taken to bring the temperature back up to 1600°F.
e) Record the date and time the corrective action began and the time it was completed on the Malfunction Log.

6. If the malfunction is not identified here, modify this report within 45 days of the malfunction to include it and the corrective actions.
   a) If emissions standard was exceeded, report the malfunction within 2 days to the VADEQ.
   b) Submit a letter within 7 working days explaining the circumstances of the event, the reasons for not following this plan and whether or not any excess emissions and/or parameter monitoring exceedances have occurred.

**Emergency Shutdown (in the event of interrupted gas supply, gas leak, or power outage)**

1. Turn off main electrical supply and gas supply and empty the molten aluminum.
2. Contact supervisor.
3. Supervisor is to contact the appropriate utility for leak checks or explanation of interrupted service.
4. Keep records of service interruptions and make notes on data logger spreadsheets should the afterburner temperature drop prior to the batch process completion

# MALFUNCTION LOG

| Type of Malfunction and Cause | Date and Time of Malfunction | Date and Time Corrective Action Began | Date and Time Corrective Action Ended | Corrective Action Taken |
|---|---|---|---|---|
| | | | | |
| | | | | |
| | | | | |
| | | | | |
| | | | | |
| | | | | |
| | | | | |
| | | | | |
| | | | | |
| | | | | |

# SECTION 2
# ECLIPSE BURNERS

US FURNACES, LLC MAX 4000

# Eclipse RatioAir Burners

## Model RA0100

*Data sheet Edition 09.15*

*Version 3*

| Parameter | | Specifications | | |
|---|---|---|---|---|
| | | Packaged Blower Nominal (50Hz and 60Hz) | | |
| **Maximum Input, Btu/h (kW)[1, 2]** | **Chamber Pressure "w.c. (mbar)** | **Straight Combustor** | **Medium Velocity Combustor** | **High Velocity Combustor** |
| | -2.0 (-5.0) | 1,311,000 (384) | 1,052,000 (308) | 977,000 (286) |
| | -1.0 (-2.5) | 1,216,000 (356) | 982,000 (288) | 935,000 (274) |
| | 0.0 (0.0) | 1,113,000 (326) | 907,000 (266) | 892,000 (261) |
| | 1.0 (2.5) | 1,000,000 (293) | 825,000 (242) | 846,000 (248) |
| | 2.0 (5.0) | 871,000 (255) | 734,000 (215) | 798,000 (234) |
| **Minimum Input, Btu/h (kW)** *For lower inputs, contact Eclipse, Inc.* | | 30,000 (8.8) | 30,000 (8.8) | 30,000 (8.8) |
| **Main Gas Inlet Pressure, "w.c. (mbar)[3]** *Fuel pressure at ratio regulator inlet* | Maximum | 20 (50) | 20 (50) | 27 (67) |
| | Minimum | 15 (37) | 15 (37) | 15 (37) |
| **High Fire Visible Flame Length, inches (mm)** *Measured from the outlet end of the combustor* | | 45 (1143) | 38 (965) | 33 (838) |
| **Approximate Flame Velocity, ft/s (m/s)** *Approximately 15% excess air at maximum input* | | - | 250 (75) | 500 (150) |
| **Maximum Chamber Temperature, °F (°C)** | Alloy Combustor | 1500 (820) | 1750 (955) | 1750 (955) |
| | SiC Combustor | 1900 (1040) | 2500 (1370) | 2500 (1370) |
| | Block & Holder | - | 2800 (1540) | 2800 (1540) |
| **Flame Detection** | | Flame rod or UV scanner available for all combustors* | | |
| **Blower Motor Power, Hp** | 60 Hz | 6" w.c. @ 16,500 scfh, 1/2 hp | 6" w.c. @ 16,500 scfh, 1/2 hp | 10" w.c. @ 22,000 scfh, 1 hp |
| | 50 Hz | 4.2" w.c. @ 13,700 scfh, 0.37 kW | 6" w.c. @ 16,500 scfh, 0.37 kW | 10" w.c. @ 22,000 scfh, 0.75 kW |
| **Weight, lbs (kg)[4]** | Alloy Combustor | 170 (77) | | |
| | Block and Holder | 231 (105) | | |
| **Fuels[5]** *For any other mixed gas, contact Eclipse, Inc.* | | Natural Gas, Propane or Butane | | |
| **Approvals** | | АИ30 | | |

* Flamerod cannot be selected if gas is rotated 90° clockwise from air inlet.

[1] Maximum inputs for packaged blower versions are given for the standard combustion air blower without an inlet air filter.

[2] Blower motor service factors greater than 1.0 may be required when firing into negative chamber pressure applications. For specific application questions, contact Eclipse.

[3] For proper performance, this pressure must be kept constant across the burner operating range.

[4] All weights are approximate.

[5] See Design Guide 115 for more information about typical fuel composition and properties.

- All inputs based upon gross calorific values and standard conditions: 1 atmosphere, 70°F (21°C).
- Blower motor service factors greater than 1.0 may be required when firing into negative chamber pressure applications. For specific application questions, contact Eclipse.
- Eclipse reserves the right to change the construction and/or configuration of our products at any time without being obliged to adjust earlier supplies accordingly.
- All information is based on laboratory testing. Different chamber conditions will affect the data.

elster
Thermal Solutions

## Control and Operation Curve

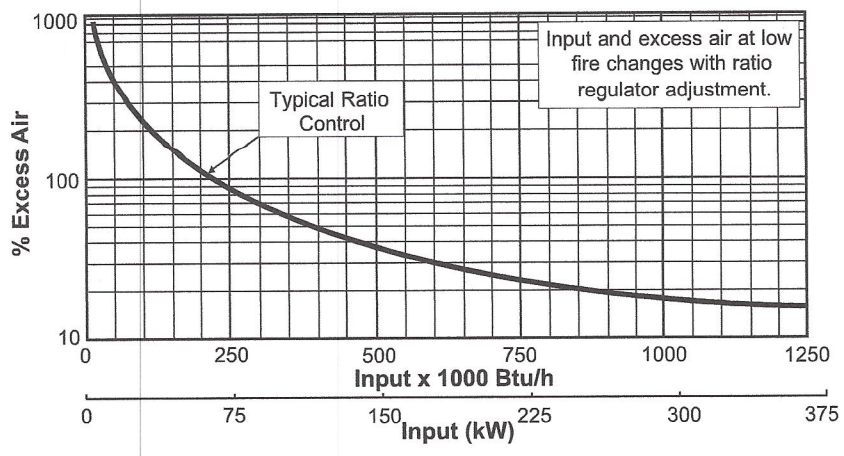


## Straight Combustor Specifications

### $NO_x$ Emission (On ratio)

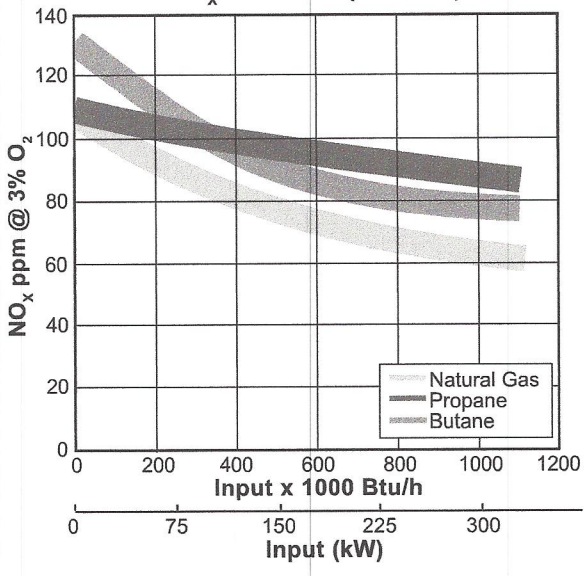


**$NO_x$ emission data is given for:**

- Ambient combustion air ~70°F (21°C)
- Minimal process air velocity
- ppm volume dry at 3% $O_2$
- Neutral chamber pressure

**Emissions from the burner are influenced by:**

- Chamber conditions
- Fuel type
- Firing rate
- Ratio regulator adjustment
- Combustion air temperature

CO emission is largely influenced by chamber conditions. Contact your local Eclipse representative for an estimate of CO emission on your application.

### Fuel Orifice Δp vs. Input

(Δp Measured Between Taps B and D)

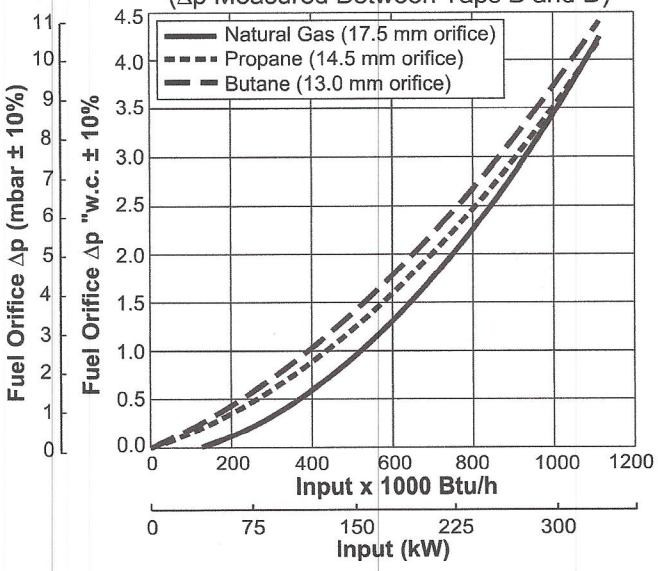


### Air Δp vs. Input

(Δp Measured Between Tap C and the Chamber with the Burner Firing)

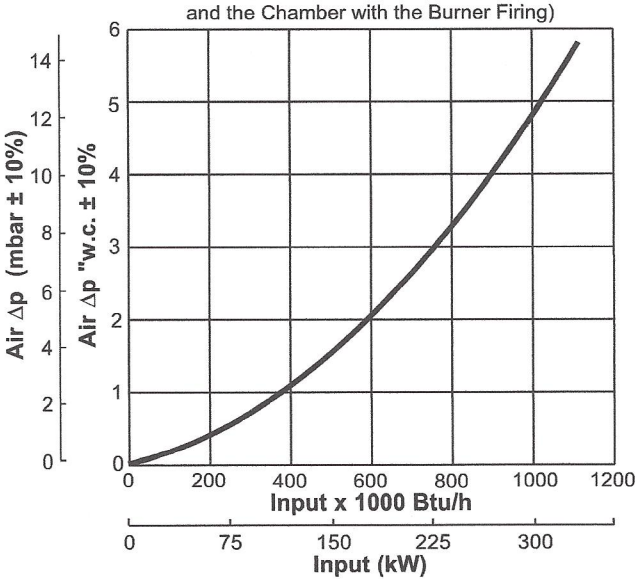

# Medium Velocity Combustor Specifications

## $NO_x$ Emission Data

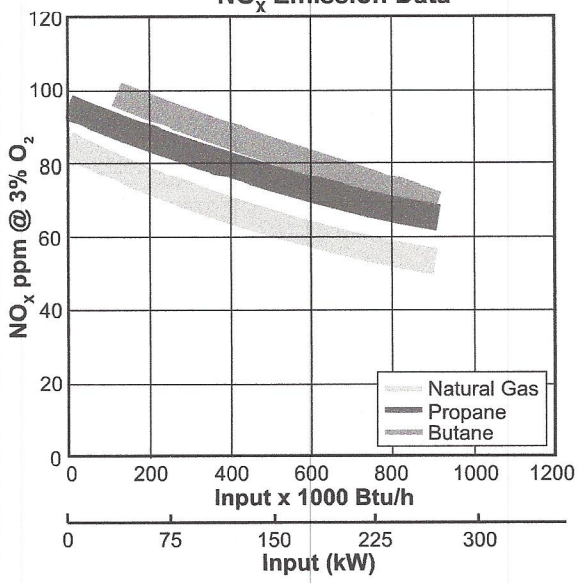


**$NO_x$ emission data is given for:**

- Ambient combustion air ~70°F (21°C)
- Minimal process air velocity
- ppm volume dry at 3% $O_2$
- Neutral chamber pressure

**Emissions from the burner are influenced by:**

- Chamber conditions
- Fuel type
- Firing rate
- Ratio regulator adjustment
- Combustion air temperature

CO emission is largely influenced by chamber conditions. Contact your local Eclipse representative for an estimate of CO emission on your application.

## Fuel Orifice Δp vs Input

Δp Measured Between Taps B & D

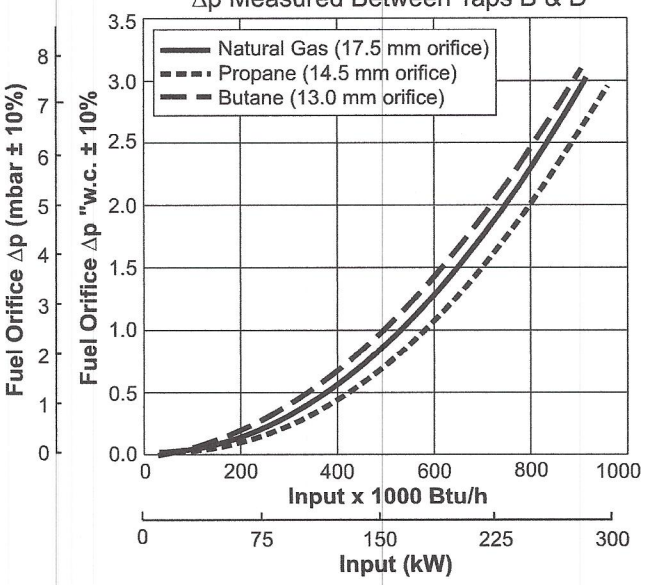


## Air Δp vs Input

(Measured Between Tap C & the Chamber with the Burner Firing)

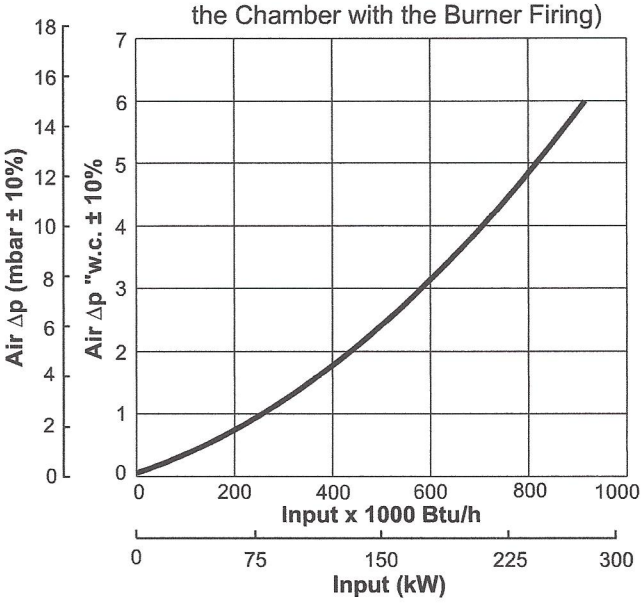

ECLIPSE®

# High Velocity Combustor Specifications

## $NO_x$ Emission Data

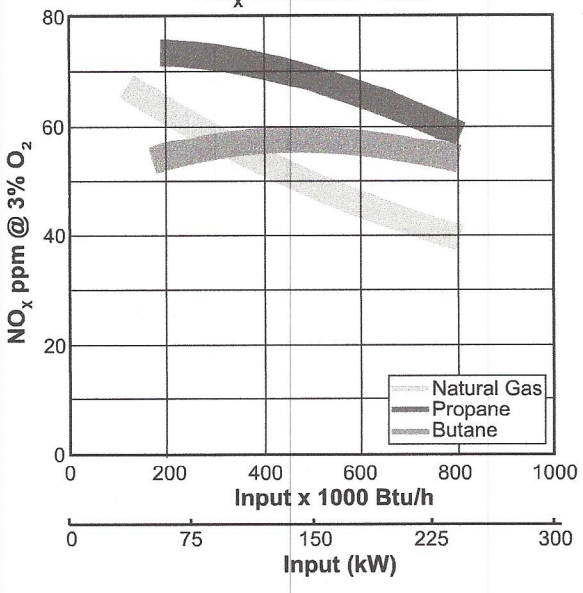


**$NO_x$ emission data is given for:**

- Ambient combustion air ~70°F (21°C)
- Minimal process air velocity
- ppm volume dry at 3% $O_2$
- Neutral chamber pressure

**Emissions from the burner are influenced by:**

- Chamber conditions
- Fuel type
- Firing rate
- Ratio regulator adjustment
- Combustion air temperature

CO emission is largely influenced by chamber conditions. Contact your local Eclipse representative for an estimate of CO emission on your application.

## Fuel Orifice Δp vs Input

Δp Measured Between Taps B & D

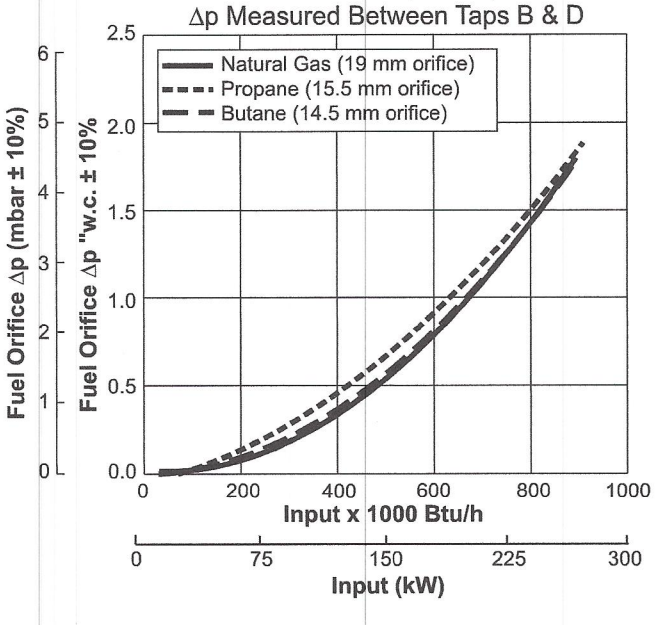


## Air Δp vs Input

(Measured Between Tap C & the Chamber with the Burner Firing)

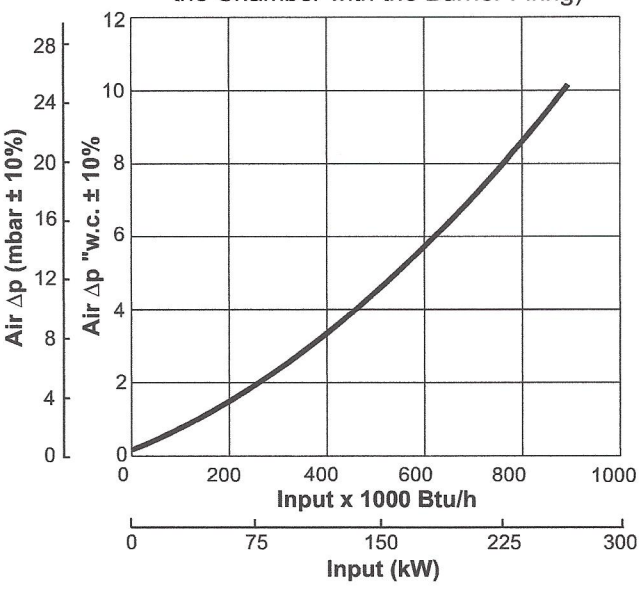

ECLIPSE®

## Dimensions and Specifications

Dimensions in mm (inches)

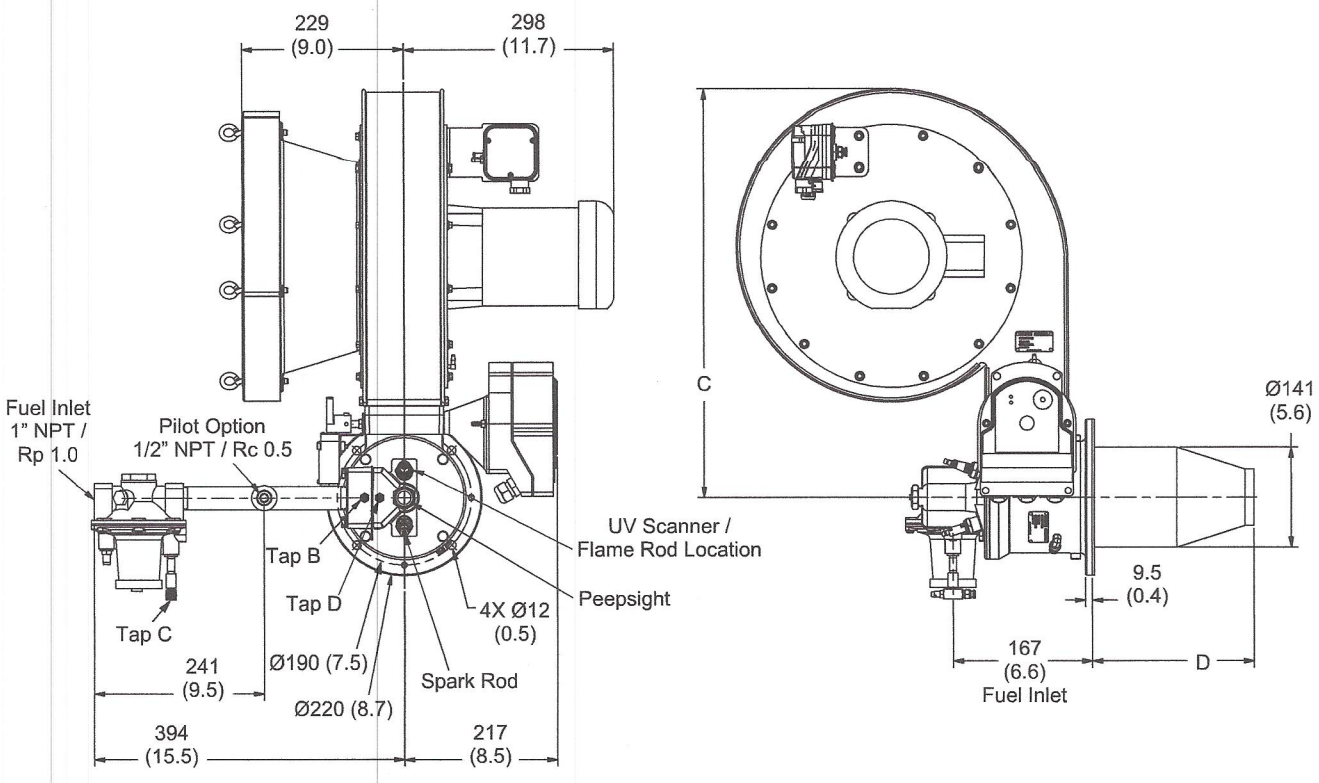


| Blower | C |
|---|---|
| 60 Hz (10" w.c.) | 501 (19.7) |
| 60 Hz (6" w.c.) | 438 (17.2) |
| 60 Hz (3" w.c.) | 387 (15.2) |
| 50 Hz (6" w.c.) | 501 (19.7) |
| 50 Hz (4.2" w.c.) | 445 (17.5) |

| Combustor Type | D |
|---|---|
| Straight Alloy Tube | 240 (9.4) |
| Straight Silicon Carbide Tube | 230 (9.1) |
| Medium Velocity Alloy Tube | 224 (8.8) |
| Medium Velocity Silicon Carbide Tube | 230 (9.1) |
| High Velocity Alloy Tube | 213 (8.4) |
| High Velocity Silicon Carbide Tube | 230 (9.1) |

ECLIPSE®

## Combustor Options

### Straight Alloy Combustor

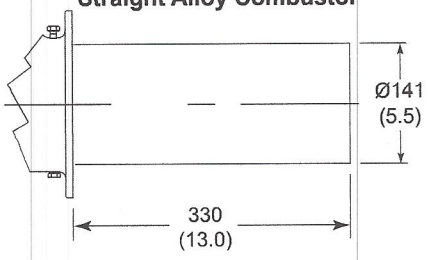


### Medium & High Velocity Alloy Combustor

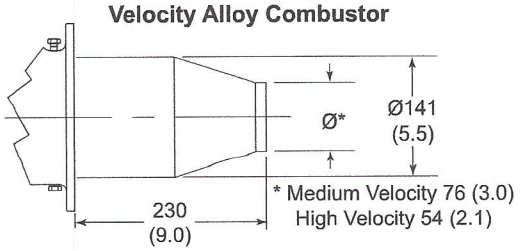


### Mounting Pattern

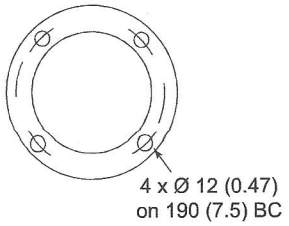


### Straight SiC Combustor

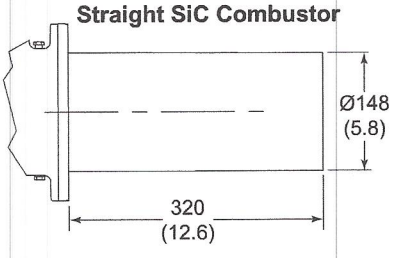


### Medium & High Velocity SiC Combustor

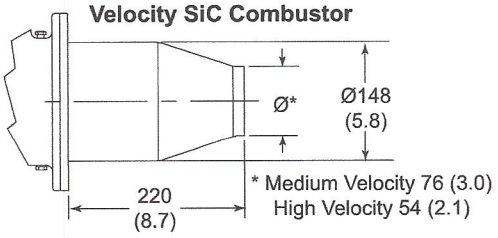


### Mounting Pattern

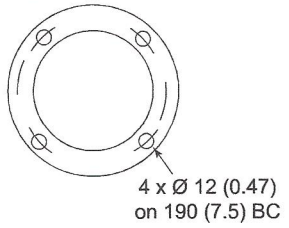


### Block & Holder

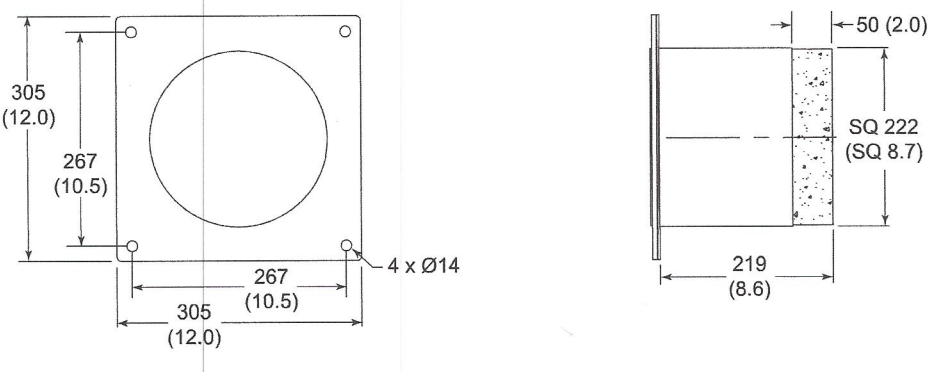


## Burner Configurations

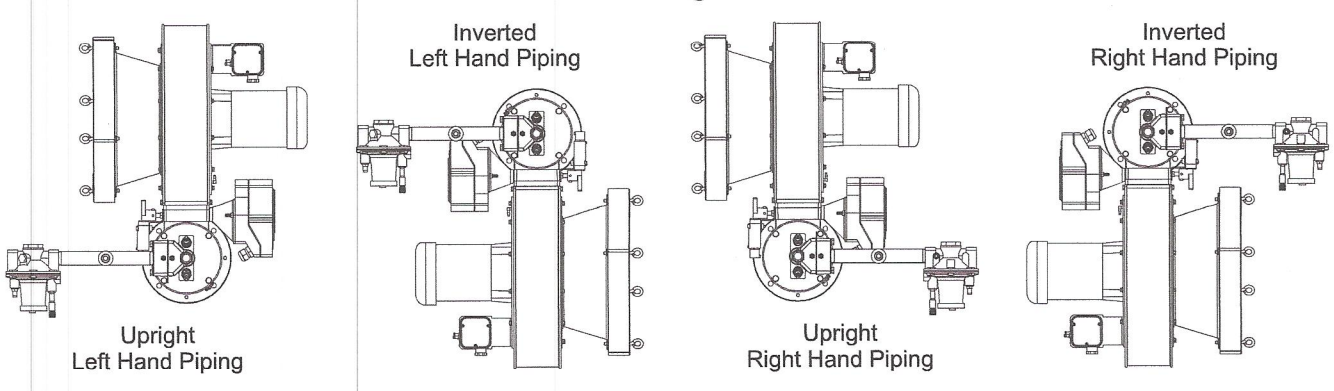


Even though the blower motor is on the "left" side of the inverted units, it is still a "right hand" motor in relationship to the blower assembly.

elster
Thermal Solutions

© Eclipse, Inc. All Rights Reserved

# Eclipse RatioAir Burners

## Model RA0025 - 2000

*Operating Instructions Edition 09.15*

*Version 3*

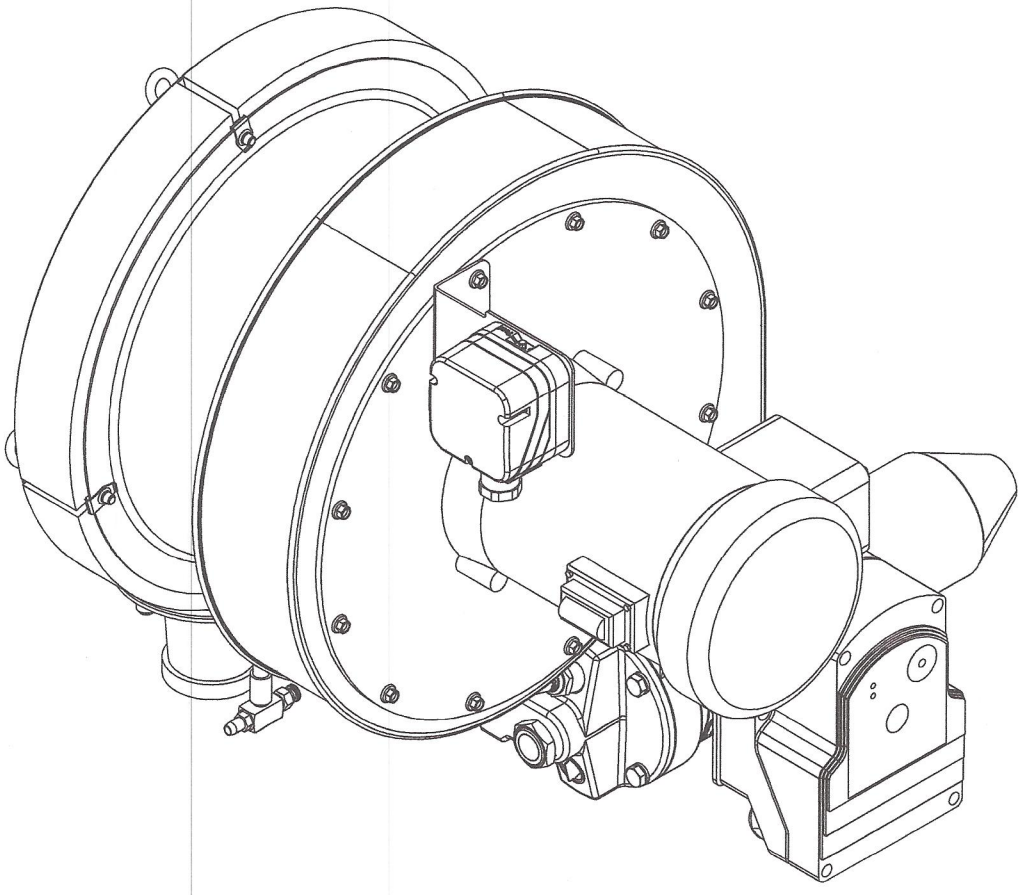

elster
Thermal Solutions

## Copyright

Copyright 2010 by Eclipse, inc. All rights reserved worldwide. This publication is protected by federal regulation and shall not be copied, distributed, transmitted, transcribed or translated into any human or computer language, in any form or by any means, to any third parties, without the express written consent of Eclipse, inc.

## Disclaimer Notice

In accordance with the manufacturer's policy of continual product improvement, the product presented in this brochure is subject to change without notice or obligation.

The material in this manual is believed adequate for the intended use of the product. If the product is used for purposes other than those specified herein, confirmation of validity and suitability must be obtained. Eclipse warrants that the product itself does not infringe upon any United States patents. No further warranty is expressed or implied.

## Liability & Warranty

We have made every effort to make this manual as accurate and complete as possible. Should you find errors or omissions, please bring them to our attention so that we may correct them. In this way we hope to improve our product documentation for the benefit of our customers. Please send your corrections and comments to our Technical Documentation Specialist.

It must be understood that Eclipse's liability for its product, whether due to breach of warranty, negligence, strict liability, or otherwise is limited to the furnishing of replacement parts and Eclipse will not be liable for any other injury, loss, damage or expenses, whether direct or consequential, including but not limited to loss of use, income, or damage to material arising in connection with the sale, installation, use of, inability to use, or the repair or replacement of Eclipse's products.

Any operation expressly prohibited in this manual, any adjustment, or assembly procedures not recommended or authorized in these instructions shall void the warranty.

## Document Conventions

There are several special symbols in this document. You must know their meaning and importance.

The explanation of these symbols follows below. Please read it thoroughly.

## How To Get Help

If you need help, contact your local Eclipse representative. You can also contact Eclipse at:

1665 Elmwood Rd.
Rockford, Illinois 61103 U.S.A.
Phone: 815-877-3031
Fax: 815-877-3336
http://www.eclipsenet.com

Please have the information on the product label available when contacting the factory so we may better serve you.

ECLIPSE® Innovative Thermal Solutions www.eclipsenet.com
Product Name
Item #
S/N
DD MMM YYYY

| | |
|---|---|
| ⚠ | This is the safety alert symbol. It is used to alert you to potential personal injurt hazards. Obey all safety messages that follow this symbol to avoid possible injury or death. |
| ⚠ DANGER | Indicates a hazardous situation which, if not avoided, will result in death or serious injury. |
| ⚠ WARNING | Indicates a hazardous situation which, if not avoided, could result in death or serious injury. |
| ⚠ CAUTION | Indicates a hazardous situation which, if not avoided, could result in minor or moderate injury. |
| *NOTICE* | Is used to address practices not related to personal injury. |
| NOTE | Indicates an important part of text. Read thoroughly. |

# Table of Contents

**Introduction** ..... **4**
Product Description ..... 4
Audience ..... 4
RatioAir Documents ..... 4
Purpose ..... 4
**Safety** ..... **5**
Introduction ..... 5
Safety ..... 5
Capabilities ..... 5
Operator Training ..... 5
Replacement Parts ..... 5
**Installation** ..... **6**
Handling & Storage ..... 6
Approvals of Components ..... 6
Checklist Before Installation ..... 7
Installing the Flame Sensor ..... 7
Burner Installation ..... 7
Gas Piping ..... 9
Checklist After Installation ..... 11
**Adjustment, Start & Stop** ..... **12**
Adjustment Procedure ..... 12
Step 1: Reset the System ..... 12
Step 2: Set Low Fire Air ..... 13
Step 3: Ignite the Burner ..... 14
Step 4: Set Low Fire Gas (if required) ..... 18
Step 5: Verify Settings ..... 19
**Maintenance & Troubleshooting** ..... **20**
Monthly Checklist ..... 20
Yearly Checklist ..... 20
Troubleshooting Procedures ..... 21
**Appendix** ..... **i**

# Introduction

# 1

## Product Description

The RatioAir is a nozzle-mix type burner designed for direct and indirect air heating in a wide range of applications including:

- Industrial Ovens and Furnaces
- Glass Lehrs
- Indirect Fired Air Heaters
- RTO Incinerators
- After Burners
- Galvanizing Kettles
- Waterbath Vaporizers

The burner package includes a combustion air blower and an air/gas ratio regulator to fire over a wide gas turndown range with controlled ratio. RatioAir burners are available with three different outlet tube velocity characteristics (standard, medium and high velocity), and are capable of outlet speeds of 250 ft/s with the medium velocity and 500 ft/s with the high velocity tubes.

The burner is designed for:

- Efficient Ratio Controlled Combustion
- Reliable Burner Operation
- Simple Burner Adjustment
- Direct Spark Ignition
- Multiple Fuel Capability

A wide variety of options and configurations are available due to the modular design of the burner.

## Audience

This manual has been written for people who are already familiar with all aspects of a nozzle-mix burner and its add-on components, also referred to as "the burner system".

These aspects are:

- Installation
- Use
- Maintenance

The audience is expected to have previous experience with this type of equipment.

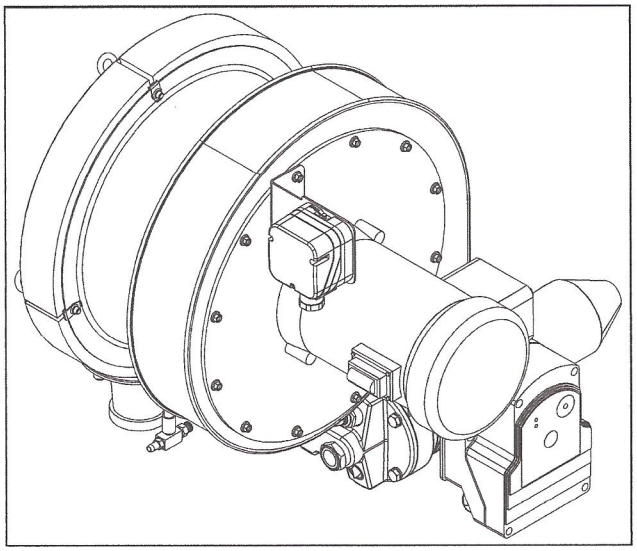

**Figure 1.1 RatioAir Burner**

## RatioAir Documents

**Installation Guide No. 115**

- This document

**Datasheet, Series 115**

- Available for individual RA models
- Required to complete design and selection

**Design Guide No. 115**

- Used with Datasheet to complete installation

**Related Documents**

- EFE 825 (Combustion Engineering Guide)
- Eclipse Bulletins and Info Guides: 710, 732, 760, 818, 830, 832, 852, 854, 856, 610, 820, 930

## Purpose

The purpose of this manual is to ensure the installation and adjustment of a safe, effective and trouble-free combustion system.

# Safety



Important notices which help provide safe burner operation will be found in this section. To avoid personal injury and damage to the property or facility, the following warnings must be observed. All involved personnel should read this entire manual carefully before attempting to start or operate this system. If any part of the information in this manual is not understood, contact Eclipse before continuing.

## Safety Warnings

**⚠ DANGER**

- **The burners, described herein, are designed to mix fuel with air and burn the resulting mixture. All fuel burning devices are capable of producing fires and explosions if improperly applied, installed, adjusted, controlled or maintained.**
- **Do not bypass any safety feature; fire or explosion could result.**
- **Never try to light a burner if it shows signs of damage or malfunction.**

**⚠ WARNING**

- **The burner and duct sections are likely to have HOT surfaces. Always wear the appropriate protective equipment when approaching the burner.**
- **Eclipse products are designed to minimize the use of materials that contain crystalline silica. Examples of these chemicals are: respirable crystalline silica from bricks, cement or other masonry products and respirable refractory ceramic fibers from insulating blankets, boards, or gaskets. Despite these efforts, dust created by sanding, sawing, grinding, cutting and other construction activities could release crystalline silica. Crystalline silica is known to cause cancer, and health risks from the exposure to these chemicals vary depending on the frequency and length of exposure to these chemicals. To reduce the risk, limit exposure to these chemicals, work in a well-ventilated area and wear approved personal protective safety equipment for these chemicals.**

**NOTICE**

- **This manual provides information regarding the use of these burners for their specific design purpose. Do not deviate from any instructions or application limits described herein without written approval from Eclipse.**

## Capabilities

Only qualified personnel, with sufficient mechanical aptitude and experience with combustion equipment, should adjust, maintain or troubleshoot any mechanical or electrical part of this system. Contact Eclipse for any needed commissioning assistance.

## Operator Training

The best safety precaution is an alert and trained operator. Train new operators thoroughly and have them demonstrate an adequate understanding of the equipment and its operation. A regular retraining schedule should be administered to ensure operators maintain a high degree of proficiency. Contact Eclipse for any needed site-specific training.

## Replacement Parts

Order replacement parts from Eclipse only. All Eclipse approved valves or switches should carry UL, FM, CSA, CGA and/or CE approval where applicable.

# Installation



In this section you will find information and instructions needed to install the burner and system components.

## Handling & Storage

**NOTICE**

- **When refractory combustion block is supplied with the burner, it is critical that the instructions for handling and storage are followed. The refractory should be considered fragile; improper handling and storage will cause premature failure.**

### Handling

- Inspect the system, being sure the components are clean and free of damage.
- Use the appropriate support and handling equipment when lifting the burner.
- Protect all components on the system from weather, damage, dirt and moisture.
- Protect the system and its components from excessive temperatures and humidity.

### Storage

- Make sure the components are clean and free of damage.
- Store the components in a cool, clean, dry room.
- Keep all system components in their original packaging as long as possible

## Approval of Components

### Limit Controls & Safety Equipment

All limit controls and safety equipment must comply with all applicable local codes and/or standards and must be listed for combustion safety by an independent testing agency. Typical application examples include:

- American: NFPA 86 with listing marks from UL, FM, CSA
- European: EN 746-2 with CE mark from TuV, Gastec, Advantica

### Electrical Wiring

All the electrical wiring must comply with all applicable local codes and/or standards such as:

- NFPA Standard 70
- IEC60364
- CSA C22
- BS7671

### Gas Piping

All the gas piping must comply with all applicable local codes and/or standards such as:

- NFPA Standard 54
- ANSI Z223
- EN 746-2

### Where to Get the Standards:

The NFPA Standards are available from:
National Fire Protection Agency
Batterymarch Park
Quincy, MA 02269
www.nfpa.org

The ANSI Standards are available from:
American National Standard Institute
1430 Broadway
New York, NY 10018
www.ansi.org

The UL Standards are available from:
333 Pfingsten Road
Northbrook, IL 60062
www.ul.com

The FM Standards are available from:
1151 Boston-Providence Turnpike
PO Box 9102
Norwood, MA 02062
www.fmglobal.com/approvals

**Information on the EN standards and where to get them is available from:**

Comité Européen de Normalisation
Stassartstraat 36
B-1050 Brussels
Phone: +32-25196811
Fax: +32-25196819
www.cen.eu

Comité Européen de Normalisation Electronique
Stassartstraat 36
B-1050 Brussels
Phone: +32-25196871
Fax: +32-25196919
www.cenelec.org

## Checklist Before Installation

### Air Supply

Provide an opening in the burner room of at least one square inch per 4000 BTU/hr (6 $cm^2$ per 1 kW) to supply the burner intake with fresh, outdoor, combustion air.

If there are corrosive fumes or materials in the surrounding air, find an uncontaminated source to supply air to the burner, or provide a sufficient air filtering system.

### Exhaust

Do not allow exhaust fumes to accumulate in the work area. Provide some positive means for exhausting from the furnace and the building.

### Access

Make sure the burner is installed in such a way to allow easy access for inspection and maintenance.

### Environment

Make sure the local environment matches the original operating specifications. Check the following items:

- Voltage, frequency and stability of the electrical power
- Fuel type and supply pressure of the fuel
- Availability of enough fresh, clean combustion air
- Humidity, altitude and temperature of air
- Presence of damaging corrosive gases in the air
- Prevent direct exposure to water

## Installing the Flame Sensor

1. Install the flame sensor into the 1/2" NPT opening in the rear cover.

2. Make sure the flame sensor of a burner is connected to the electrical circuit for that burner.

**⚠ DANGER**

- **If you connect the flame sensor of a burner to the electrical circuit of the wrong burner, you can cause fires and explosions.**

There are two different types of flame sensors; UV scanner and flamerod.

### UV Scanner

For detailed information on how to install and connect a UV scanner, refer to scanner information guide.

### Flame Rod

**NOTE:** Only specific burner sizes with alloy or silicon carbide combustors can use a flamerod (see specific burner datasheets).

For detailed information on how to install and connect a flamerod, refer to Bulletin/Info guide 832.

### Installing the Spark Plug

Install the spark plug into the opening in the rear cover.

**NOTE:** Do ***not*** apply any grease to the threads of the spark plug. You can cause inadequate grounding of the spark plug if you apply grease to it. Poor grounding of the spark plug results in a weak spark.

***NOTICE***

- **Adjustments may vary from Eclipse published values if the flame controls other than those recommended in the Design Guide are used. Consult with the engineer who specified the alternate control for limitations.**

## Burner Installation

### Chamber Opening

Provide an opening in the chamber wall at least 1/2" (12mm) larger in diameter than the outside diameter of the combustor, or 1/2" (12mm) larger in height and width than the refractory block (1/4" - 6mm per side). Refer to the Chamber Opening diagram.

Provide an accessible pressure tap on the chamber wall to measure the pressure inside the firing chamber. The pressure tap should be located near the burner.

## Mounting Pattern

Attach mounting bolts to the chamber wall. Position these bolts to match the clearance holes **"C"** on the burner mounting flange. Refer to the appropriate RatioAir datasheet.

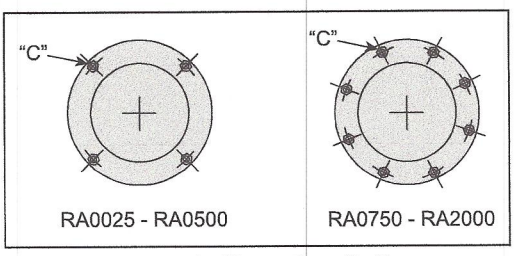


**Figure 3.1. Mounting Pattern**

## Chamber Wall

Make sure the chamber wall is strong enough to support the weight of the burner. If necessary, reinforce the mounting area. Refer to the Chamber Wall and Mounting Pattern diagrams.

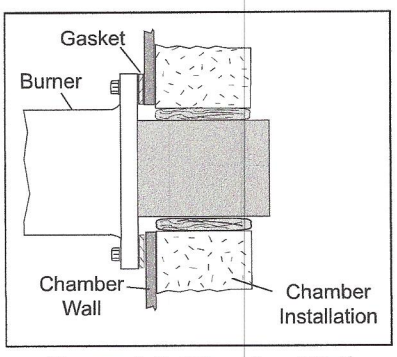


**Figure 3.2. Chamber Wall**

Refractory furnace walls must allow for thermal expansion as recommended by the refractory supplier - the wall should apply no stress on the burner block or refractory layer surrounding the burner block. Expansion joints built into the furnace wall should permit the furnace shell, burner block holder, combustor or burner block and surrounding refractory to move as a unit in the event of unequal expansion of the refractory wall and furnace shell.

The combustor or combustion block must not extend beyond the inside of the furnace wall more than 1" (24mm). Beyond this length it is necessary to add a spacer on the outside of the furnace to keep the end of the combustor or combustion block within 1/2" (12mm) of the inside furnace wall.

If the combustor or burner block is shorter than the furnace wall thickness the block or combustor should be recessed into the wall. To prevent refractory overheating, a 45° chamber should be applied.

## Burner Mounting

Mount burner to chamber wall using customer supplied nuts and lock washers.

## Alloy Combustor (Figure 3.3)

1. Ensure the gasket ❶ is installed between the burner and the chamber wall ❷.
2. Ensure that gasket ❶ does not leak.
3. Check the size of the clearance. If the gap ❸ around the firing tube is larger than 1/2", then pack the gap with ceramic fiber ❹.

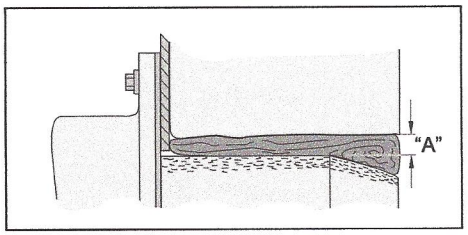


**Figure 3.3. Alloy Combustor**

## Silicon Carbide (SiC) Combustor Only (Figure 3.4)

Ensure the gasket ❶ is installed between the burner flange and chamber wall ❷.

1. Ensure gasket ❺ is installed between SiC tube and flange ❻.
2. Ensure neither gaskets ❶ nor ❺ leaks.
3. Check the size of the clearance. If the gap around the firing tube is larger than 1/2", pack the gap with ceramic fiber ❹.

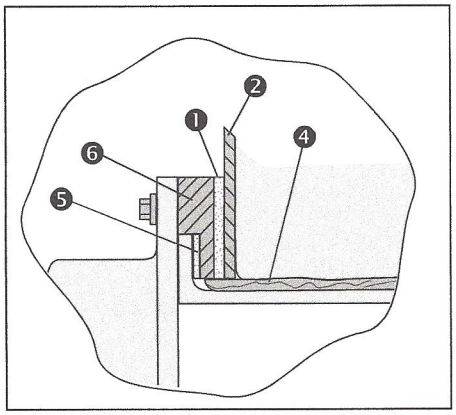


**Figure 3.4. Silicon Carbide**

### Refractory Block (Figure 3.5)

1. Ensure gasket ❶ is installed between burner ❸ and block holder ❹.

2. Ensure gasket ❺ is installed between block holder ❹ and chamber wall ❷.

3. Support the weight of refractory block ❻ with hard brick work anchored to the furnace shell ❼. Fill the 1/2" space between block ❻ and the three unsupported sides with soft gasket material ❽.

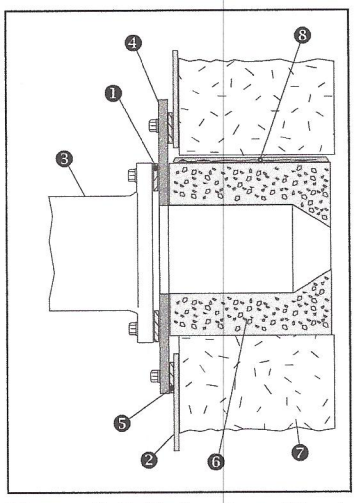


**Figure 3.5. Refractory Block**

### Large Refractory Blocks

On sizes RA0500 thru RA2000; the block must be tightly surrounded by a collar made of brick, plastic refractory, or a castable refractory of at least 4" (10 cm) minimum thickness on all sides of the block. If the collar is cast around the block, a thin plastic film (i.e. Saran Wrap® or Glad Wrap®) should be wrapped around the block to keep moisture from leaching into it. The collar should be anchored to the furnace shell with suitable anchors and must be constructed to rest on a surface capable of supporting its weight, such as a hearth or a solid refractory or brick wall. For furnaces that are unable to support the weight of the refractory block, a stainless steel shelf can be welded to the shell to support the collar.

**NOTE:** All refractory blocks are cured at a minimum temperature of 550°F (300°C) prior to shipment.

**NOTE:** The correct insulation of burner combustion blocks in furnaces results in longer block life and adds value by reducing downtime and maintenance.

### Block Holder Temperature

Excessive block holder temperatures can cause problems. Overheating can be reduced by carefully sealing the burner blocks in the wall to prevent the leakage of hot gases back to the furnace shell.

In high temperature (>1,400°F, 760°C) fiber-wall furnace installations, the length of the metallic wrapper should extend no farther than the point in the wall where the interface temperature is higher than 1800°F (760°C).

### Vertical Down Firing Blocks (Figure 3.6)

1. Down firing blocks may be suspended by customer supplied hangers ❷ attached to the burner body mounting bolts.

2. Hangers should be attached to structural support ❶.

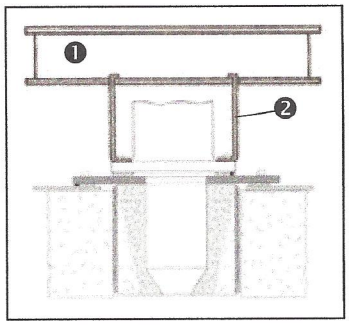


**Figure 3.6. Vertical Down Firing Block**

## Gas Piping

### Burner Piping

The burner is factory assembled and shipped as ordered.

**NOTE:** If it is necessary to redirect piping, be sure the:

- ratio regulator spring column ❶ is pointing down.
- arrow on the ratio regulator points in the direction of gas flow.
- integral fuel orifice and o-rings ❷ are re-installed in the same orientation with respect to the fuel flow.
- same straight run of pipe ❸ remains between the ratio regulator and the burner.

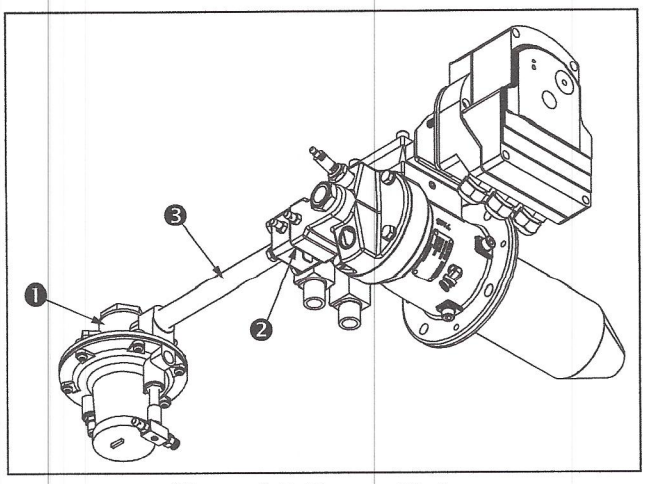


**Figure 3.7. Burner Piping**

## Supply Piping

Inlet pressure to the ratio regulator must stay within specified limits. Refer to the appropriate RatioAir datasheet.

- Locate the valve train close to the burner. The gas must reach the burner during the fixed trial for ignition.
- Appropriately size shut off valves in the valve train.
- Make sure piping is large enough to accommodate flow required to meet burner input.
- Minimize piping elbows.

## Bypass Start Gas Piping (Optional)

Install the piping as shown in the schematics using the following guidelines:

- Locate the bypass start gas solenoids ❶ close to the burner. The gas must reach the burner during the trial for ignition period.
- Minimize piping elbows.
- Install an adjustable limiting orifice (ALO) ❷ for start gas adjustment. Refer to Bulletin 728 and 730 for further information.
- Include a straight run of pipe at least 8" (192mm) long ❸ before (upstream from) the start gas orifice ❺ (optional) and at least 4" (96mm) long ❹ after (downstream from) the start gas orifice.

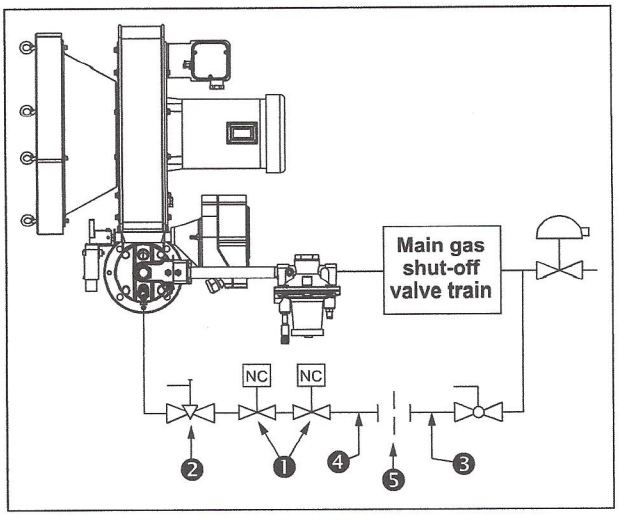


**Figure 3.8. Bypass Start Gas Piping**

***NOTICE***

- **This is an example. Please verify that piping complies with all applicable codes and/or standards.**

## Pipe Connections

- Installation of a pipe union in the gas line is recommended to simplify burner removal.
- Use of flexible pipe is optional.

**NOTE:** Flexible pipe causes higher pressure drops than standard pipe. Consider this when sizing your gas lines.

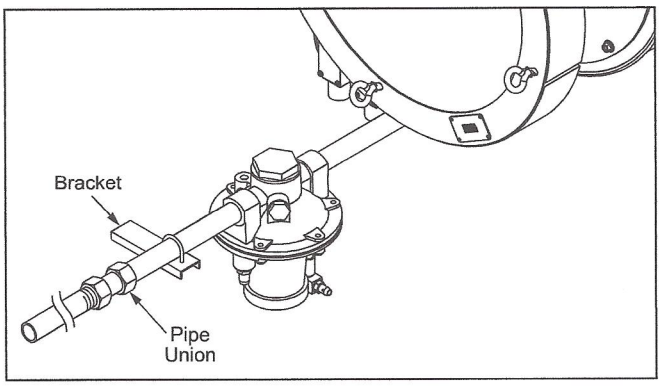


**Figure 3.9. Piping Connections**

## Piping Support

Use brackets or hangers to support the gas piping. If you have questions, consult your local gas company.

### Control Motor

Install a control motor to modulate the air butterfly valve if not previously installed on the burner.

**NOTE:** Be sure the control motor shaft and air butterfly valve shaft are aligned properly. In some cases washers may be used as shims (stacked 0, 1, or 2 high) to ensure proper alignment. Additionally, a flexible coupling can be used to handle minor misalignment.

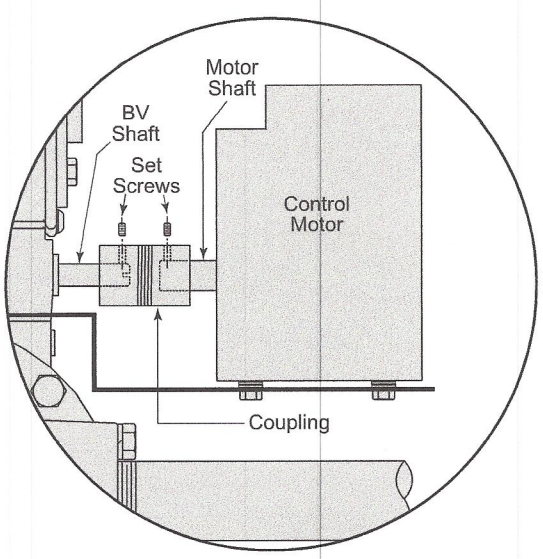


**Figure 3.10. Control Motor Mounting**

## Checklist After Installation

To verify the system was properly installed, perform the following checks:

1. Be sure there are no leaks in the gas lines.
2. Be sure all the components contained in the flame monitoring and control system are properly installed. This includes verifying that:
   - all the switches are installed in the correct locations.
   - all wiring, pressure, and impulse lines are properly connected.
3. Be sure all components of the spark ignition system are installed and functioning properly.
4. Be sure the blower rotates in the proper direction. If the rotation is incorrect, have a qualified electrician rewire the blower to rotate in the proper direction.
5. Be sure all valves are installed in the proper location and correctly oriented relative to the flow direction.

# Adjustment, Start and Stop

4

In this chapter, you will find instructions on how to adjust, start, and stop the burner system. Become familiar with burner control methods before attempting to make adjustments.

**⚠ DANGER**

- **The RatioAir burners, described herein, are designed to mix fuel with air and burn the resulting mixture. All fuel burning devices are capable of producing fires and explosions if improperly applied, installed, adjusted, controlled, or maintained.**
- **Do not bypass any safety features. This can cause fires and explosions.**
- **Never try to light a burner if it shows signs of damage or malfunction.**

## Adjustment Procedure

If you are adjusting the burner system for the first time, then you must follow these steps:

## Step 1: Reset the System

1. Set the low gas pressure switch to 20% below the "Main Gas Inlet Pressure" range as specified in the appropriate datasheet.
2. Set the high gas pressure switch to 20% above the "Main Gas Inlet Pressure" range as specified in the appropriate datasheet.
3. Close all the burner gas valves, manual and automatic.
4. Try to ignite the burner; be sure the flame monitoring system indicates a flame failure.
5. Activate the pressure switches and other limit interlocks. Be sure the switches fail as intended in the event of a power failure.

**⚠ DANGER**

- **If simulated limits or simulated flame failure do not shut down the fuel system within the required failure response time, immediately correct the problem before proceeding.**

6. If the burner is firing into a duct or chamber with a circulating fan, start the fan to produce a full process air flow past the burner.
7. Adjust main gas inlet pressure to the ratio regulator within the range specified in the appropriate datasheet.

**⚠ WARNING**

- **Gas inlet pressures must stay within the specified range. Pressure above the specified range can damage the ratio regulator.**
- **Pressure below the specified range can impair the ability of the ratio regulator to control the gas flow.**
- **Operating the system outside the specified range can cause excess fuel consumption and the possible accumulation of unburned fuel in the chamber. In extreme cases, this accumulation of unburned fuel may cause fires or explosions.**

8. Verify that the actuator opens the air BV towards the back of the burner as shown in Figure 4.1. If it doesn't, refer to the actuator's literature for instructions on how to reverse the direction.

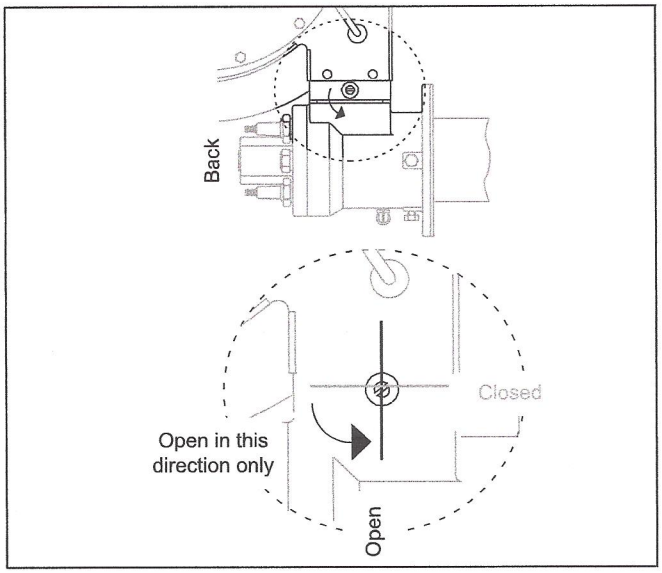


**Figure 4.1 Air Butterfly Valve**

## Step 2: Set Low Fire Air

1. Start combustion air blower.
2. Drive control motor to low fire position.
3. Measure air differential pressure between tap "C" and combustion chamber. See the appropriate series 115, datasheet.

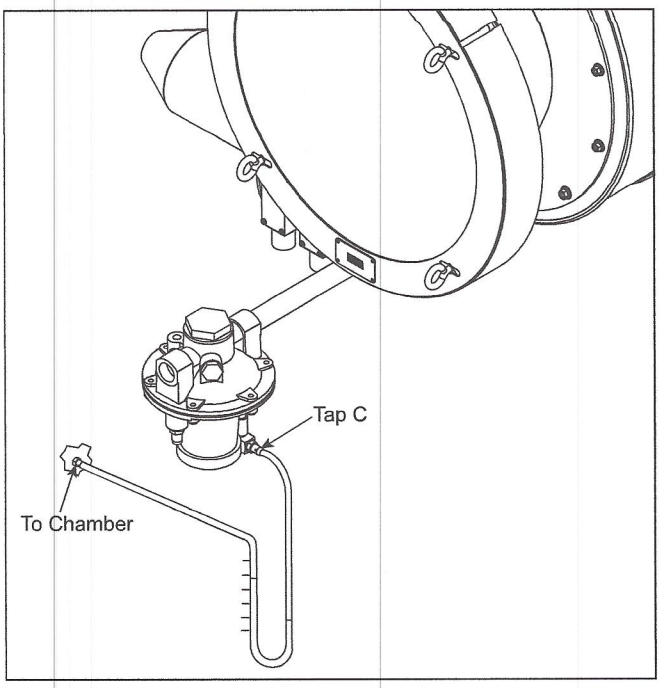


**Figure 4.2.**

**NOTE:** The pressure tap is in the open position when the screw inside the tap is unscrewed approximately 1/2 turn. Do not remove screw. Be sure to tighten pressure tap screw clockwise to the closed position after pressure measurements have been taken.

4. Set low fire air.
   a. For air control actuators that have a coupling with set screws, as shown in Figure 4.3, loosen the set screw ❶ on the burner side of the coupling ❷.

      For air controlled actuators that have a keyed or pinned coupling, as shown in Figure 4.4, please refer to the cam adjustment section of the actuator's installation literature for instructions on releasing the cam's low or off start position.

   b. There is a slot in the end of the butterfly valve shaft that is parallel to the air damper. This slot is used for visual indication of the butterfly valve position. The butterfly valve is closed when the shaft slot is perpendicular to the direction of air flow through the butterfly valve. See Figure 4.5.

   c. Rotate the air butterfly valve shaft to a fully closed position. (Holes in the butterfly valve will supply low fire air.)

      When firing into a positive chamber pressure, rotate the air butterfly valve from the closed position in the direction of actuator travel to obtain a minimum 0.3" w.c. (0,8 mbar) air differential pressure.

   d. For air control actuators that have a coupling with set screws, as shown in Figure 4.3, hold the butterfly valve firmly in place and tighten the set screw ❷.

      For air control actuators that have a keyed or pinned coupling, as shown in Figure 4.4, hold the butterfly valve firmly in place and re-engage the cam's low or off starting position.

   e. High fire air adjustment is not required if the burner is firing into a neutral pressure chamber and a 90° travel control motor is used. It may be necessary to limit control motor stroke to less than 90° if firing into a large negative chamber. Contact Eclipse for further information.

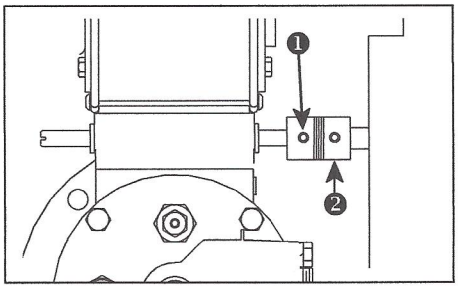


**Figure 4.3. Actuator with Flexible Coupling**

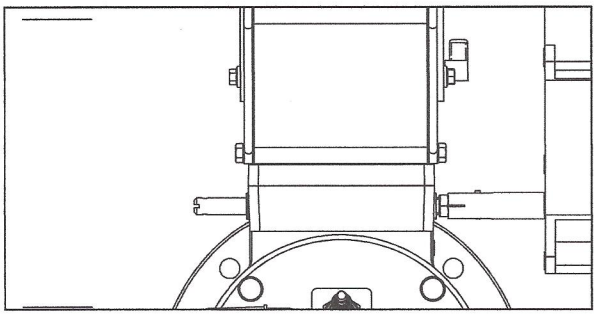

**Figure 4.4. Actuator with Keyed Coupling**

5. Verify high fire air:
   a. Drive control motor to high fire, full open.
   b. Compare the high fire air differential pressure between **Tap C** and the combustion chamber to the approximate datasheet chart "Air Δp vs. Input". If high fire air is insufficient, refer to section 5, "Troubleshooting & Maintenance", in this document.
6. Return the control motor to the low fire position.

7. Close the pressure taps.

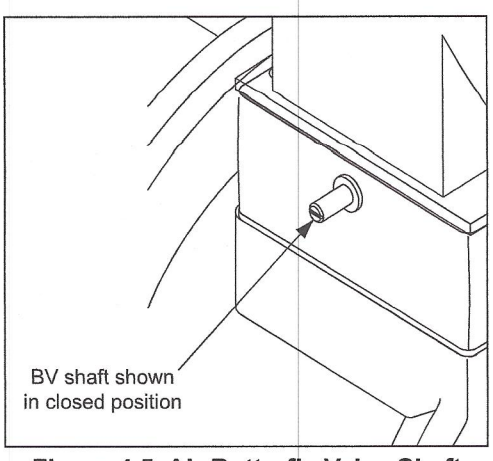


**Figure 4.5. Air Butterfly Valve Shaft**

## Step 3: Ignite the Burner

**⚠ WARNING**

- **This procedure is written with the assumption the burner has a flame monitoring control system installed and operating. A proper purge cycle must be part of the system and purge timing should not be bypassed.**

Determine system layout and use the applicable ignition procedure.

Low fire start **without** high turndown option Procedure "A".

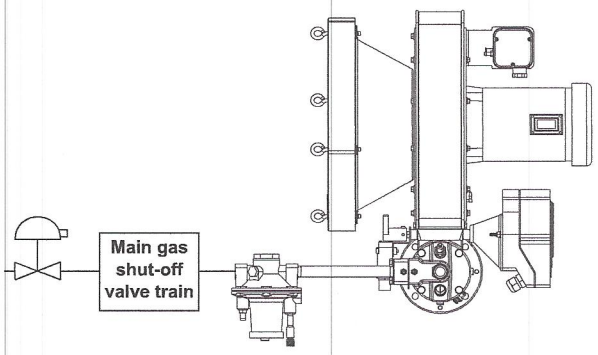


NOTE: The ratio regulator is factory set. Use Procedure "A" only if burner does not ignite or requires further adjustment.

Low fire start **with** high turndown option Procedure "B".

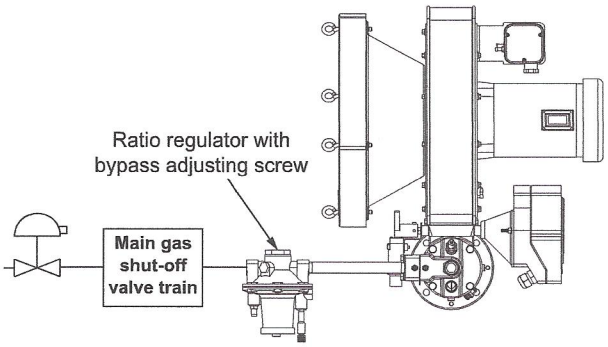


NOTE: The RatioAir burner with high turn down option includes a ratio regulator with internal bypass adjustment.

Bypass start gas **without** fuel orifice meter Procedure "C".

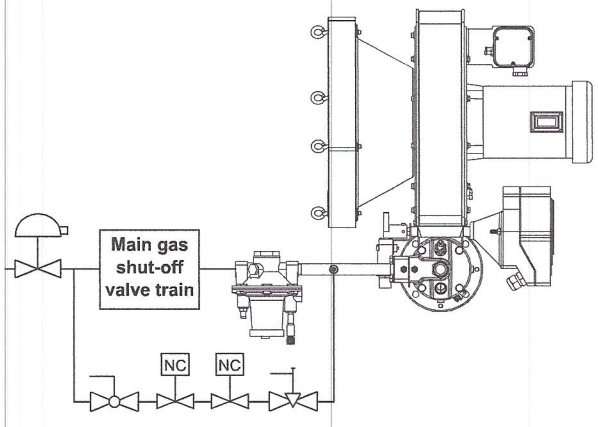


Bypass start gas **with** fuel orifice meter Procedure "D".

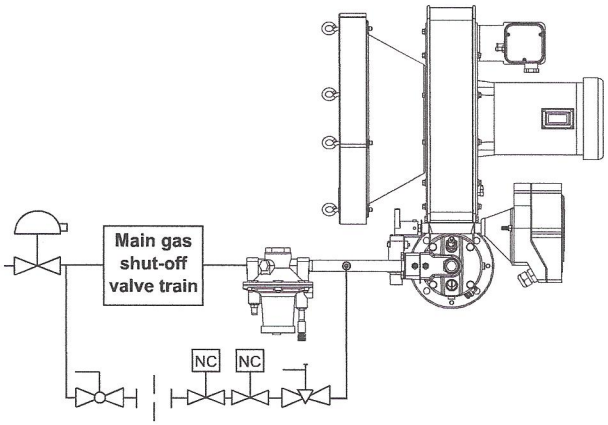


**Figure 4.6.**

**Procedure A: Low fire start *without* high turndown option**

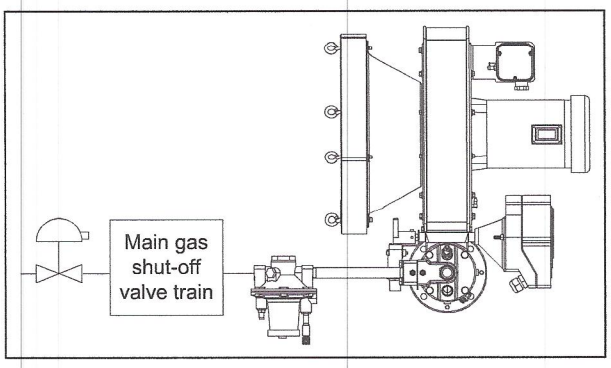


**Figure 4.7. Procedure A**

1. Drive control motor to low fire.
2. Be sure combustion air blower is running.

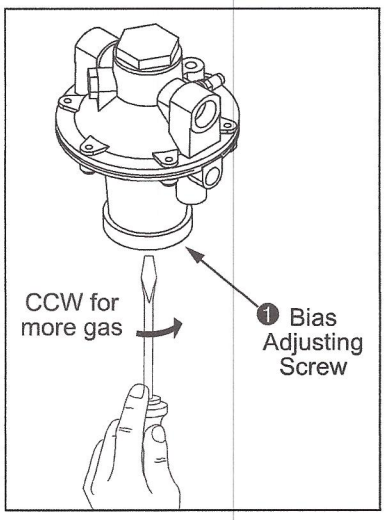


**Figure 4.8. Ratio Regulator**

3. Open main gas manual shut off valves.
4. Set system control to stay at low fire during and after ignition sequence.
5. Attempt to ignite burner.
6. If burner does not ignite:
   a. Attempt to ignite burner again to purge air from the gas piping.
   b. If burner still does not ignite, turn bias adjusting screw ❶ a half turn counterclockwise to increase gas flow.
   c. Attempt to ignite burner.
   d. Repeat steps **b** and **c** until burner ignites. If necessary, refer to Chapter 5 for troubleshooting tips.
7. Flame signal strength: Adjust gas flow with bias adjusting screw ❶ for lowest gas flow that maintains a stable flame signal:
   - counterclockwise, for more fuel
   - clockwise, for less fuel
8. Verify low fire flame:
   a. Shut off gas. When chamber temperature is below 250°F (121°C), shut off combustion air blower.
   b. Restart combustion air blower and ignite burner.
   c. Verify repeatability of ignition and low fire flame signal.

**Procedure B: Low fire start *with* high turndown option**

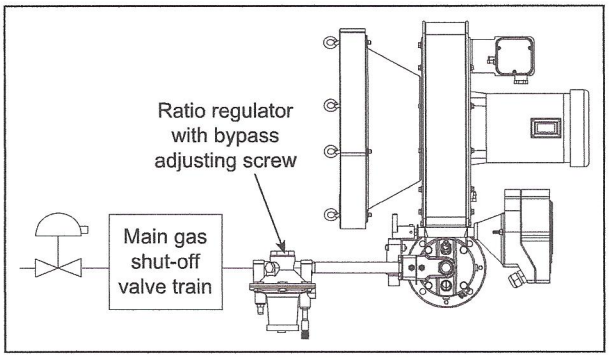


**Figure 4.9. Procedure B**

**NOTE:** The RatioAir burner with high turndown option includes a ratio regulator with internal bypass adjustment.

1. Drive control motor to low fire.
2. Be sure combustion air blower is running.
3. Open main gas manual shut off valves.

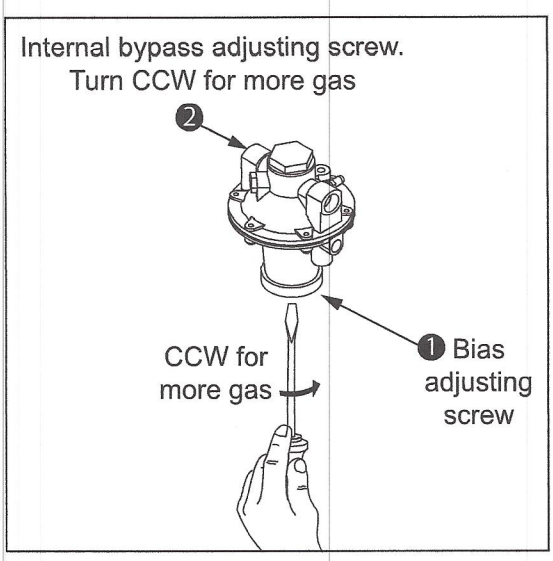


**Figure 4.10. Ratio Regulator with Internal Bypass Adjusting Screw**

4. Close internal bypass adjusting screw ❷ by turning it clockwise to closed position.
5. Set system control to stay at low fire during and after ignition sequence.
6. Attempt to ignite burner.
7. If burner does not ignite:
   a. Attempt to ignite burner again to purge air from the gas piping.
   b. If burner still does not ignite, turn bias adjusting screw ❶ a half turn counterclockwise to increase gas flow.
   c. Attempt to ignite burner.
   d. Repeat steps **b** and **c** until burner ignites. If necessary, refer to Chapter 5 for troubleshooting tips.
8. After burner ignites, slowly decrease gas flow with bias adjusting screw ❶. Decrease gas flow until the flame signal becomes erratic. (Refer to flame monitoring relay literature for a description of an erratic flame signal.)
9. If burner has gone out: Repeat ignition sequence. Turn internal bypass adjusting screw ❷ a half turn counterclockwise to increase gas flow at each attempt until burner lights.
10. Flame signal strength: Adjust gas flow with internal bypass adjusting screw ❷ for lowest gas flow that maintains a stable flame signal:
    - counterclockwise, for more fuel
    - clockwise, for less fuel
11. Verify low fire flame:
    a. Shut off gas. When chamber temperature is below 250°F (121°C), shut off combustion air blower.
    b. Restart combustion air blower and ignite burner.
    c. Verify repeatability of ignition and low fire flame signal.

**Procedure C: Bypass start gas *without* fuel orifice meter**

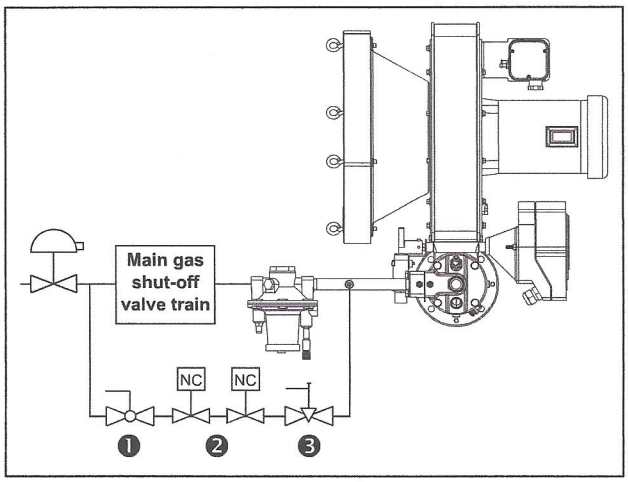


**Figure 4.11. Procedure C**

1. Drive control motor to low fire.
2. Be sure combustion air blower is running.
3. Be sure main gas manual shut off valves are closed.
4. Open main gas manual shut off valve ❶ in the bypass.

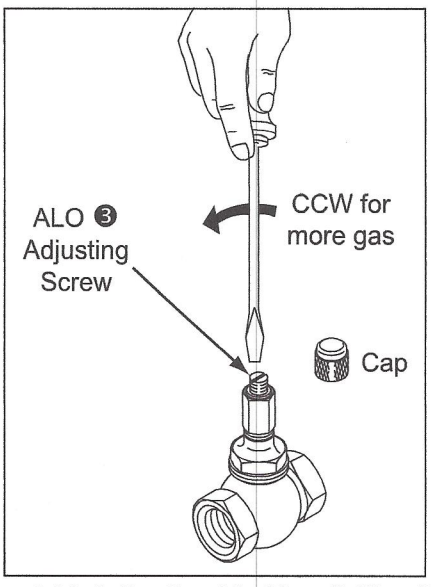


**Figure 4.12. Adjusting Limiting Orifice (ALO)**

5. Set the system to operate on bypass gas only.
6. Attempt to ignite burner by energizing spark and bypass gas solenoid valves ❷.
7. If burner does not ignite:
   a. Attempt to ignite burner again to purge air from the gas piping.
   b. If burner still does not ignite, turn ALO adjusting screw ❸ a half turn counterclockwise to increase gas flow.
   c. Attempt to ignite burner.
   d. Repeat steps **b** and **c** until burner ignites. If necessary, refer to Chapter 5 for troubleshooting tips.
8. Flame signal strength: Adjust gas flow ALO adjusting screw ❸ for lowest gas flow that maintains a stable flame signal:
   - counterclockwise, for more fuel
   - clockwise, for less fuel
9. Verify low fire flame:
   a. Shut off gas. When chamber temperature is below 250°F (121°C), shut off combustion air blower.
   b. Restart combustion air blower and ignite burner.
   c. Verify repeatability of ignition and low fire flame signal.

### Procedure D: Bypass start gas *with* fuel orifice meter

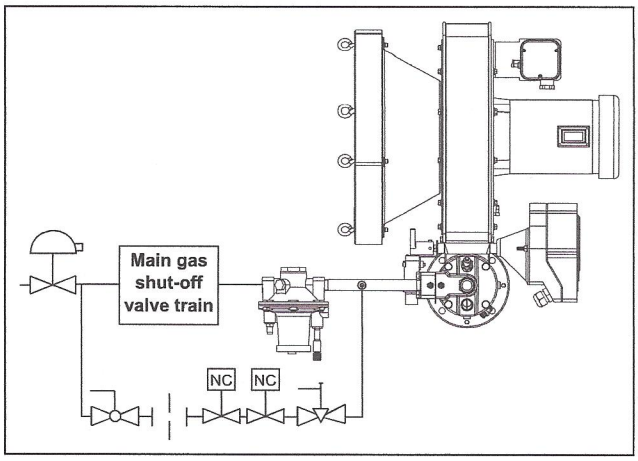


**Figure 4.13. Procedure D**

1. Drive control motor to low fire.
2. Be sure combustion air blower is running.
3. Be sure main gas manual shut off valves are closed.
4. Prepare to measure bypass gas flow at the fuel orifice meter ❹.
5. Open manual shut off valve ❶ in the bypass.
6. Set the system to operate on bypass gas only.
7. Attempt to ignite burner by energizing spark and bypass gas solenoid valves ❷.

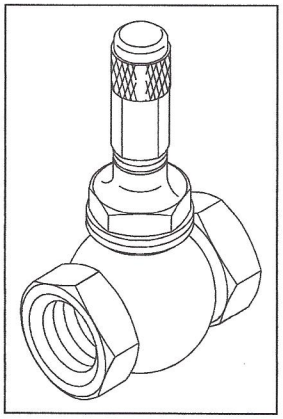

**Figure 4.14. Adjusting Limiting Orifice (ALO)**

8. If burner does not ignite:
   a. Attempt to ignite burner again to purge air from the gas piping.
   b. If burner still does not ignite, turn ALO adjusting screw ❸ a half turn counterclockwise to increase gas flow.
   c. Attempt to ignite burner.
   d. Repeat steps **b** and **c** until burner ignites. If necessary, refer to Chapter 5 for troubleshooting tips.
9. Adjust bypass gas flow with ALO adjusting screw ❸ to achieve the low fire gas flow indicated on datasheet. Refer to the fuel orifice meter literature for instructions on flow measurement.

   **NOTE:** When firing into negative or fluctuating chamber pressures, a higher bypass gas flow may be necessary.
10. Verify the bypass gas flame:
    a. Shut off gas. When chamber temperature is below 250°F (121°C), shut off combustion air blower.
    b. Restart combustion air blower and ignite burner.
    c. Verify repeatability of ignition and low fire flame signal.

## Step 4: Set Low Fire Gas (only required if bypass start is used)

**⚠ WARNING**

- **This procedure is written with the assumption the burner has a flame monitoring control system installed and operating. A proper purge cycle must be part of the system control and purge timing should not be bypassed.**

This step is only necessary when bypass start gas is used. Determine the piping method (low fire or bypass) and ratio regulator installed (standard or high turndown), and proceed with the applicable procedure:

### Bypass Start Gas with Standard Turndown Ratio Regulator

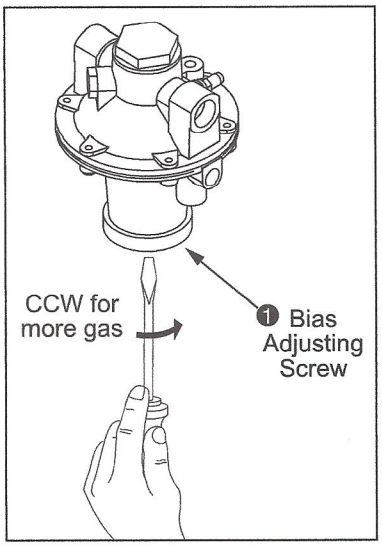


**Figure 4.15. Ratio Regulator**

1. Open all manual gas shut off valves.
2. Set system control to stay at low fire during and after ignition sequence.
3. Ignite the burner.
4. If burner goes out due to main gas flame failure, turn bias adjusting screw ❶ a half turn counterclockwise to increase gas flow. Repeat ignition sequence until burner lights.
5. Flame signal strength: adjust gas flow with bias adjusting screw ❶ for lowest gas flow that maintains a stable flame signal:
   - counterclockwise, for more fuel
   - clockwise, for less fuel
6. Verify low fire flame:
   a. Drive control motor from low fire and back. Verify low fire and stable flame signal are repeated.
   b. Turn the burner off and repeat the ignition sequence. Verify low flow and stable flame signal are repeated.

### Bypass Start Gas with High Turndown Option

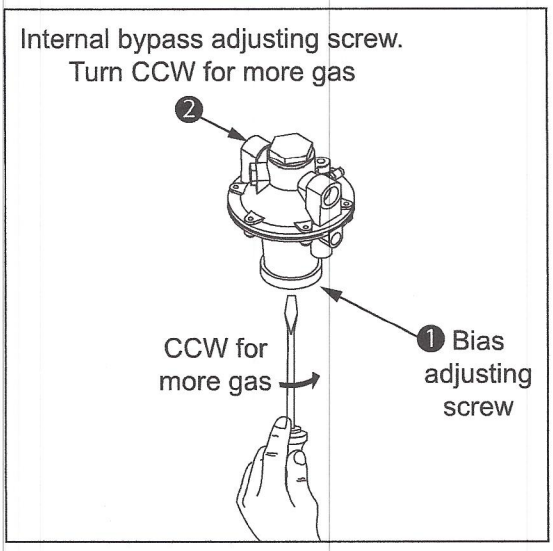


**Figure 4.16. Ratio Regulator with Internal Bypass Adjusting Screw**

1. Open all manual shut off valves.
2. Close internal bypass adjusting screw ❷ by turning it clockwise to closed position.
3. Set system control to stay at low fire during and after ignition sequence.
4. Ignite the burner.
5. If burner goes out due to main gas flame failure, turn bias adjusting screw ❶ a half turn clockwise to increase gas flow. Repeat ignition sequence until burner lights.
6. Slowly decrease gas flow with bias adjusting screw ❶. Decrease gas flow until the flame signal becomes erratic. (Refer to flame monitoring relay literature for a description of an erratic flame signal.)
7. If burner has gone out, repeat ignition sequence. Turn internal bypass adjusting screw ❷ a half turn counterclockwise to increase gas flow at each attempt until burner lights.
8. Flame signal strength, adjust gas flow with internal bypass adjusting screw ❷ for lowest gas flow that maintains a stable flame signal:
   - counterclockwise, for more fuel
   - clockwise, for less fuel
9. Verify low fire flame:
   a. Drive the control motor from low fire and back. Verify low fire and stable flame signal are repeated.
   b. Turn the burner off and repeat the ignition sequence. Verify low fire and stable flame signal are repeated.

## Step 5: Verify Air Settings

**NOTE:** There are no high fire gas adjustments or air adjustments when firing into a neutral chamber. However, air and gas pressures can be used to verify the burner system is properly adjusted.

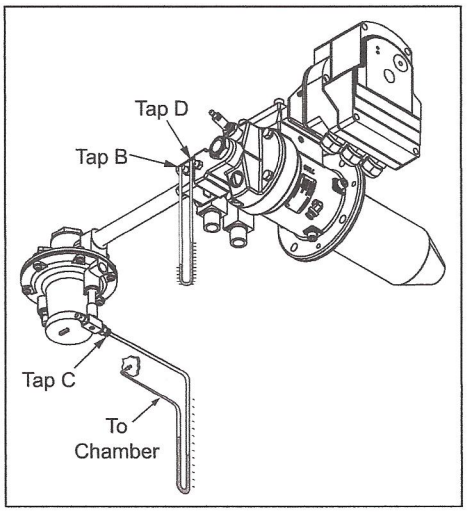


**Figure 4.17. Setting Verification**

1. With burner lit, drive control motor to high fire.
2. Wait for the chamber to reach normal operating conditions (e.g. chamber temperature, process flows, etc.).
3. Measure high fire fuel differential pressure between tap "B" and tap "D". Compare this to the "Fuel Orifice ΔP vs. Input" graph on the datasheet.
4. Measure high fire air differential pressure between tap "C" and the chamber. Compare this pressure to the "Air ΔP vs. Air Flow" graph on the datasheet.
5. Drive the control motor to low fire and verify low fire flame signal and flame appearance (if viewing).

   **NOTE:** Gas pressure at low fire will be too low to measure and verify the fuel settings.
6. Cycle burner from high to low several times to check repeatability of settings.
7. Readjust burner if the settings do not repeat as expected. If necessary refer to Chapter 5, Maintenance & Troubleshooting.
8. Record all setup data as an aid for future troubleshooting and setup operations.
9. Stop the burner.

# Maintenance and Troubleshooting

5

This section is divided into two parts. The first part describes the maintenance procedures, and the second part helps you to identify problems that may occur and gives advice on how to solve these problems.

Preventative maintenance is the key to a reliable, safe and efficient system. The following are suggested guidelines for periodic maintenance. Burners in severe environments or operational conditions should be checked more frequently.

**NOTE:** The monthly and yearly lists are an average interval. If your environment is dirty, then the intervals may be shorter. Check with local authorities having jurisdiction on their recommended maintenance schedules.

## Monthly Checklist

1. Inspect flame-sensing devices for good condition and cleanliness.
2. Check for proper air/gas pressures (refer to the RatioAir Datasheets, Series 115).
3. Test all the system alarms for proper response signals.
4. Check and clean igniter electrodes.
5. Check the air control valve for smooth, trouble free operation and adjustment.
6. Check for the proper operation of ventilating equipment.
7. Test the interlock sequence on all safety equipment. Manually force each interlock to intentionally fail while at the same time noting if related equipment closes or stops as specified by the manufacturer. Test the flame safeguard by manually shutting off the gas to the burner.
8. Test the manual gas shut off cocks for proper operation.
9. Clean and/or replace the combustion air blower filter.
10. Inspect and clean the combustion air blower rotor.

## Yearly Checklist

1. Test (leak test) safety shut-off valves for tightness of closure.
2. Test pressure switch settings by checking switch movements against pressure settings and comparing these with the actual impulse pressure.
3. Visually check ignition cable and connectors.
4. Inspect impulse piping for leaks.
5. Clean and inspect all burners.
6. Remove and clean the orifice plate ❺, see Figure 5.1.
7. Be sure the following components are not damaged or distorted:
   - the burner nozzle
   - the igniter
   - the flame sensors
   - the combustion tube or block

The nozzle and combustion tube/block can be inspected without removing the burner from the chamber wall or entering the chamber. See Figure 5.1. Perform the following:

a. Shut the burner off and manually close the main gas shut off cocks.
b. Allow the chamber temperature to cool down to 250°F (121°C).
c. Disconnect the gas piping at a union or the gas inlet flange ❶ provided on the burner.
d. Remove the rear cover bolts ❷.
e. Remove the rear cover ❸ from the burner housing ❹.
f. To re-assemble, follow this sequence in the reverse order.

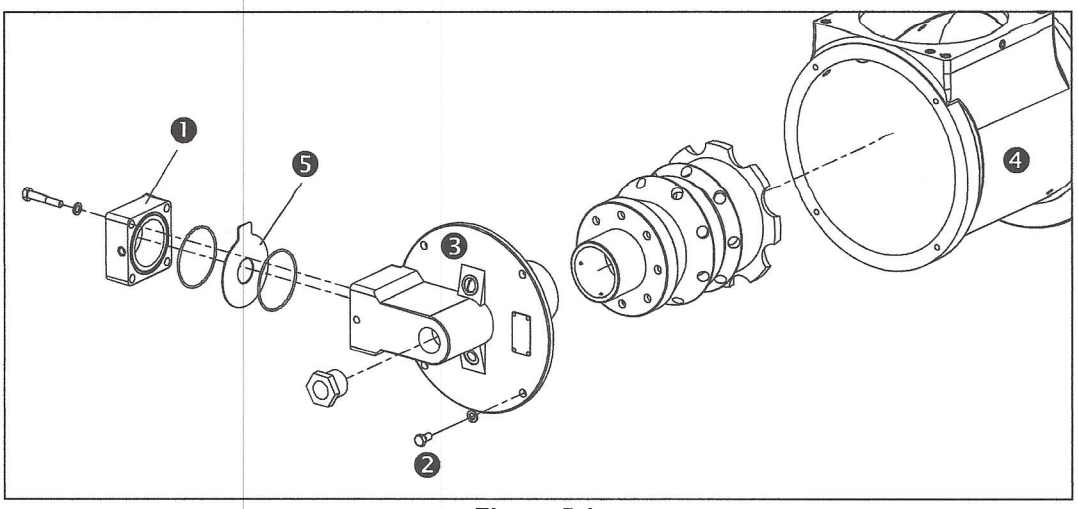


**Figure 5.1.**

## Troubleshooting

| Problem | Possible Cause | Solution |
|---|---|---|
| Start-up sequence runs but burner does not light. | No ignition: There is no power to the ignition transformer. | Restore the power to the ignition transformer. |
| | No ignition: Open circuit between the ignition transformer and the igniter. | Repair or replace the wiring of the igniter. |
| | No ignition: The igniter needs cleaning. | Clean the igniter. |
| | No ignition: The igniter is not correctly grounded to the burner. | Clean the threads on the igniter and the burner.<br>**NOTE:** Do not apply grease to the threads on the igniter. |
| | No ignition: Igniter insulation is broken. Igniter is grounding out. | Inspect the igniter, replace if broken. |
| | Not enough gas: The gas pressure going into the ratio regulator is too low. | Check the start-up settings. Measure the gas pressures and adjust where necessary. |
| | Not enough gas: The impulse line to the ratio regulator is leaking. | Repair any leaks. |
| | Not enough gas: The pilot adjusting valve or bypass valve is not open far enough. | Adjust bypass or low fire gas. |
| | Not enough gas: Start gas solenoid valve does not open. | Check the solenoid valve coil for proper operation. Replace it if necessary. |
| | Not enough gas: Gas valve does not open. | Check the wiring to the automatic gas shut-off valve.<br>Check the output from the flame safeguard.<br>Open manual gas cock. |
| | Not enough gas: Ratio regulator is incorrectly set. | Adjust the ratio regulator to the proper setting. |
| | No flame signal: Broken flamerod or dirty UV scanner lens. | Inspect and clean sensor. Replace if necessary. |
| | No flame signal: Spark plug and flamerod reversed. | Exchange spark plug / flamerod or their wiring. |
| | Too much gas: Wrong or missing burner fuel orifice. | Check RatioAir Datasheets, Series 115 for fuel orifice and given fuel. |

| Problem | Possible Cause | Solution |
|---|---|---|
| The low fire flame is weak or unstable. | Not enough gas flowing to the burner. | Adjust the ratio regulator to increase the gas flow. |
| | Not enough air. | Check for proper blower rotation.<br>Check air filter for blockage.<br>Compensate for chamber by opening the low fire air butterfly valve position. |
| The burner goes out when it cycles to high fire. | Not enough gas pressure into the ratio regulator. | Check the start-up settings.<br>Measure the gas pressures and adjust them where necessary.<br>Check for valve train pressure loss. |
| | Loading line to the ratio regulator is leaking. | Repair the leak in the loading line. |
| The burner is erratic and does not respond to adjustment. | Internal damage to the burner: Some parts inside the burner are loose, dirty, or burned out. | Contact Eclipse for further information. |
| The burner is unstable or produces soot, smoke, or excessive carbon monoxide. | The air/gas ratio is out of adjustment. | Measure all the gas pressures and air pressures. Compare these pressures to the documented initial start-up settings and adjust them where necessary. |
| The burner cannot achieve full capacity. | Air filter is blocked. | Clean or replace the air filter. |
| | Gas pressure going into the ratio regulator is too low. | Adjust the gas pressure. |
| Cannot initiate a start sequence. | Air pressure switch has not made contact. | Check air pressure switch adjustment.<br>Check air filter.<br>Check blower rotation.<br>Check outlet pressure from blower. |
| | High gas pressure switch has activated. | Check incoming gas pressure.<br>Adjust gas pressure if necessary.<br>Check pressure switch setting and operation. |
| | Low gas pressure switch has activated. | Check incoming gas pressure.<br>Adjust gas pressure if necessary.<br>Check pressure switch setting and operation. |
| | Malfunction of the flame safeguard system (e.g. shorted out flame sensor or electrical noise in the sensor line). | Have a qualified electrician troubleshoot and correct the problem. |
| | No power to the control unit. | Have a qualified electrician troubleshoot and correct the problem. |
| | Main power is off. | Be sure the main power to the system is switched to the “on” position. |

# Appendix

## Conversion Factors

### Metric to English

| From | To | Multiply By |
|---|---|---|
| actual cubic meter/h ($am^3/h$) | actual cubic foot/h (acfh) | 35.31 |
| normal cubic meter/h ($Nm^3/h$) | standard cubic foot /h (scfh) | 38.04 |
| degrees Celsius (°C) | degrees Fahrenheit (°F) | (°C x 9/5) + 32 |
| kilogram (kg) | pound (lb) | 2.205 |
| kilowatt (kW) | Btu/h | 3415 |
| meter (m) | foot (ft) | 3.281 |
| millibar (mbar) | inches water column ("w.c.) | 0.402 |
| millibar (mbar) | pounds/sq in (psi) | $14.5 \times 10^{-3}$ |
| millimeter (mm) | inch (in) | $3.94 \times 10^{-2}$ |
| $MJ/Nm^3$ | $Btu/ft^3$ (standard) | 26.86 |

### Metric to Metric

| From | To | Multiply By |
|---|---|---|
| kiloPascals (kPa) | millibar (mbar) | 10 |
| meter (m) | millimeter (mm) | 1000 |
| millibar (mbar) | kiloPascals (kPa) | 0.1 |
| millimeter (mm) | meter (m) | 0.001 |

### English to Metric

| From | To | Multiply By |
|---|---|---|
| actual cubic foot/h (acfh) | actual cubic meter/h ($am^3/h$) | $2.832 \times 10^{-2}$ |
| standard cubic foot /h (scfh) | normal cubic meter/h ($Nm^3/h$) | $2.629 \times 10^{-2}$ |
| degrees Fahrenheit (°F) | degrees Celsius (°C) | (°F - 32) x 5/9 |
| pound (lb) | kilogram (kg) | 0.454 |
| Btu/h | kilowatt (kW) | $0.293 \times 10^{-3}$ |
| foot (ft) | meter (m) | 0.3048 |
| inches water column ("w.c.) | millibar (mbar) | 2.489 |
| pounds/sq in (psi) | millibar (mbar) | 68.95 |
| inch (in) | millimeter (mm) | 25.4 |
| $Btu/ft^3$ (standard) | $MJ/Nm^3$ | $37.2 \times 10^{-3}$ |

# System Schematics

| Symbol | Appearance | Name | Remarks | Bulletin/ Info Guide |
|---|---|---|---|---|
| 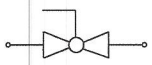 |  | Gas Cock | Gas cocks are used to manually shut off the gas supply. | 710 |
| 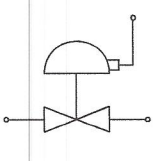 | 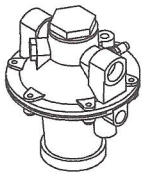 | Ratio Regulator | A ratio regulator is used to control the air/gas ratio. The ratio regulator is a sealed unit that adjusts the gas pressure in ratio with the air pressure. To do this, it measures the air pressure with a pressure sensing line, the impulse line. This impulse line is connected between the top of the ratio regulator and the burner body. | |
| Main Gas Shut-Off Valve Train | | Main Gas Shut-Off Valve Train | Eclipse strongly endorses NFPA as a minimum. | 790/791 |
| Pilot Gas Shut-Off Valve Train | | Pilot Gas Valve Train | Eclipse strongly endorses NFPA as a minimum. | 790/791 |
| 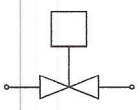 | 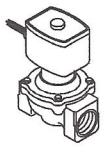 | Automatic Shut-Off Valve | Shut-off valves are used to automatically shut off the gas supply on a gas system or a burner. | 760 |
|  |  | Orifice Meter | Orifice meters are used to measure flow. | 930 |
| 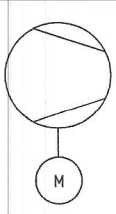  | 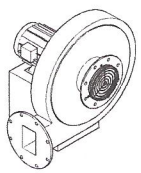 | Combustion Air Blower | The combustion air blower provides the combustion air to the burner(s). | 610 |

| Symbol | Appearance | Name | Remarks | Bulletin/ Info Guide |
|---|---|---|---|---|
| 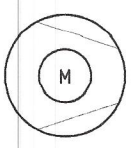  | 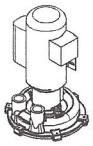 | Hermetic Booster | Booster is used to increase gas pressure. | 620 |
| 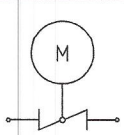  | 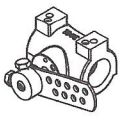 | Automatic Butterfly Valve | Automatic butterfly valves are typically used to set the output of the system. | 720 |
| 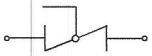 | 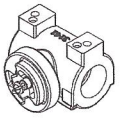 | Manual Butterfly Valve | Manual butterfly valves are used to balance the air or gas flow at each burner. | 720 |
| 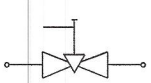 |  | Adjustable Limiting Orifice | Adjustable limiting orifices are used for fine adjustment of gas flow. | 728/730 |
| 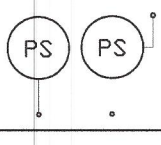  | 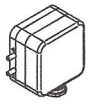 | Pressure Switch | A switch activated by rise or fall in pressure. A manual reset version requires pushing a button to transfer the contacts when the pressure set point is satisfied. | 840 |
| 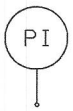  |  | Pressure Gauge | A device to indicate pressure. | 940 |
|  |  | Check Valve | A check valve permits flow only in one direction and is used to prevent back flow of gas. | 780 |
| 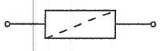 | 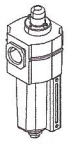 | Strainer | A strainer traps sediment to prevent blockage of sensitive components downstream. | |
|  |  | Flexible Connector | Flexible connectors isolate components from vibration, mechanical, and thermal stresses. | |
| 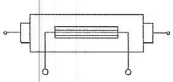 | 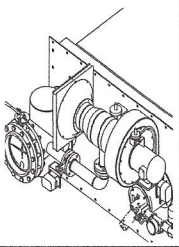 | Heat Exchanger | Heat exchangers transfer heat from one medium to another. | 500 |
|  | | Pressure Taps | Pressure taps measure static pressure. | |

ECLIPSE®

© Eclipse, Inc. All Rights Reserved

elster
Thermal Solutions

# Eclipse RatioAir Burners

## Model RA0025 - 2000

*Technical Information Edition 09.15*

*Version 3*

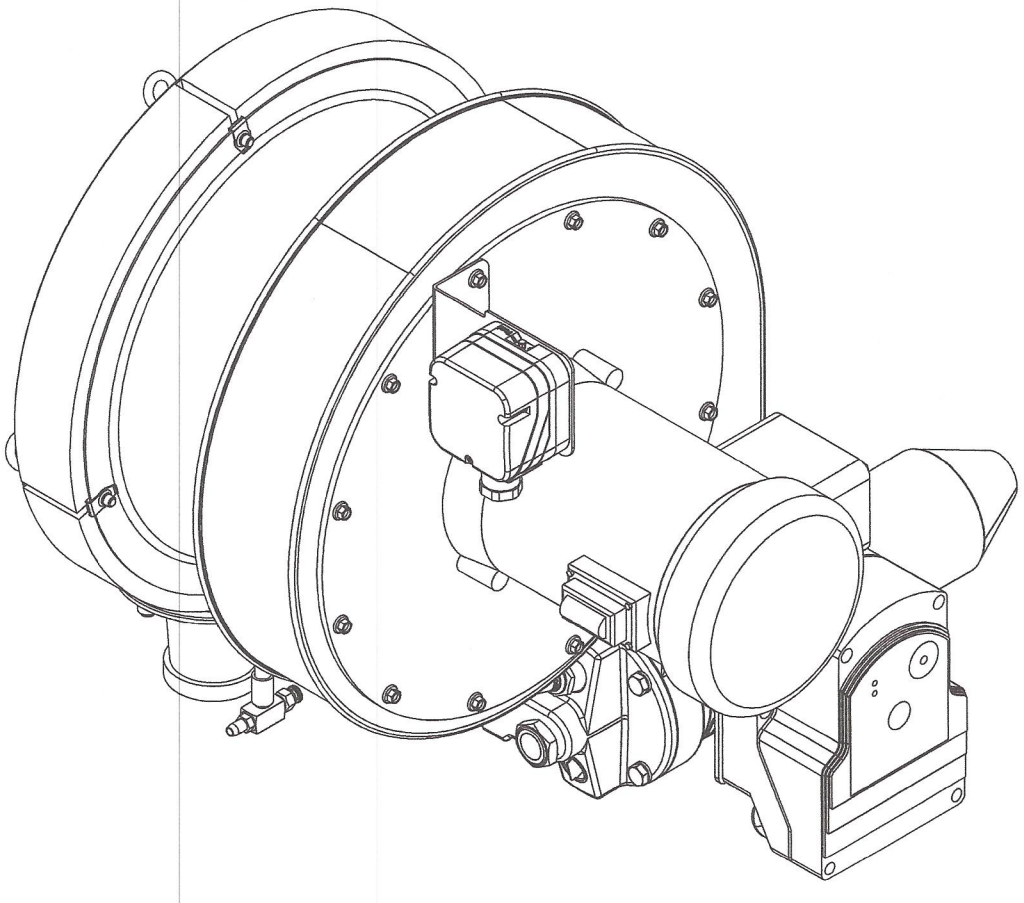

elster
Thermal Solutions

## Copyright

Copyright 2007 by Eclipse, inc. All rights reserved worldwide. This publication is protected by federal regulation and shall not be copied, distributed, transmitted, transcribed or translated into any human or computer language, in any form or by any means, to any third parties, without the express written consent of Eclipse, inc.

## Disclaimer Notice

In accordance with the manufacturer's policy of continual product improvement, the product presented in this brochure is subject to change without notice or obligation.

The material in this manual is believed adequate for the intended use of the product. If the product is used for purposes other than those specified herein, confirmation of validity and suitability must be obtained. Eclipse warrants that the product itself does not infringe upon any United States patents. No further warranty is expressed or implied.

## Liability & Warranty

We have made every effort to make this manual as accurate and complete as possible. Should you find errors or omissions, please bring them to our attention so that we may correct them. In this way we hope to improve our product documentation for the benefit of our customers. Please send your corrections and comments to our Technical Documentation Specialist.

It must be understood that Eclipse's liability for its product, whether due to breach of warranty, negligence, strict liability, or otherwise is limited to the furnishing of replacement parts and Eclipse will not be liable for any other injury, loss, damage or expenses, whether direct or consequential, including but not limited to loss of use, income, or damage to material arising in connection with the sale, installation, use of, inability to use, or the repair or replacement of Eclipse's products.

Any operation expressly prohibited in this manual, any adjustment, or assembly procedures not recommended or authorized in these instructions shall void the warranty.

## Document Conventions

There are several special symbols in this document. You must know their meaning and importance.

The explanation of these symbols follows below. Please read it thoroughly.

## How To Get Help

If you need help, contact your local Eclipse representative. You can also contact Eclipse at:

1665 Elmwood Rd.
Rockford, Illinois 61103 U.S.A.
Phone: 815-877-3031
Fax: 815-877-3336
http://www.eclipsenet.com

Please have the information on the product label available when contacting the factory so we may better serve you.

ECLIPSE® www.eclipsenet.com
Product Name
Item #
S/N
DD MMM YYYY

| | |
|---|---|
| ⚠ | This is the safety alert symbol. It is used to alert you to potential personal injurt hazards. Obey all safety messages that follow this symbol to avoid possible injury or death. |
| ⚠ DANGER | Indicates a hazardous situation which, if not avoided, will result in death or serious injury. |
| ⚠ WARNING | Indicates a hazardous situation which, if not avoided, could result in death or serious injury. |
| ⚠ CAUTION | Indicates a hazardous situation which, if not avoided, could result in minor or moderate injury. |
| *NOTICE* | Is used to address practices not related to personal injury. |
| **NOTE** | Indicates an important part of text. Read thoroughly. |

# Table of Contents

**Introduction** ..... **4**

Product Description ..... 4

Audience ..... 4

RatioAir Documents ..... 4

Purpose ..... 4

**Safety** ..... **5**

Introduction ..... 5

Safety ..... 5

Capabilities ..... 5

Operator Training ..... 5

Replacement Parts ..... 5

**System Design** ..... **6**

Design ..... 6

Step 1: Burner Option Selection ..... 6

Step 2: Blower Option Selection ..... 8

Step 3: Control Methodology ..... 9

Step 4: Ignition System ..... 10

Step 5: Flame Monitoring Control System ..... 11

Step 6: Main Gas Shut-Off Valve Train ..... 11

Step 7: Process Temperature Control System ..... 11

**Appendix** ..... **12**

Conversion Factors ..... 12

Key to System Schematics ..... 12

# Introduction

# 1

## Product Description

The RatioAir is a nozzle-mix type burner designed for direct and indirect air heating in a wide range of applications including:

- Industrial Ovens and Furnaces
- Glass Lehrs
- Indirect Fired Air Heaters
- RTO Incinerators
- After Burners
- Galvanizing Ketles
- Waterbath Vaporizers

The burner package includes a combustion air blower and an air/gas ratio regulator to fire over a wide gas turndown range with controlled ratio. RatioAir burners are available with three different outlet tube velocity characteristics (standard, medium and high velocity), and are capable of outlet speeds of 250 ft/s with the medium velocity and 500 ft/s with the high velocity tubes.

The burner is designed for:

- Efficient Ratio Controlled Combustion
- Reliable Burner Operation
- Simple Burner Adjustment
- Direct Spark Ignition
- Multiple Fuel Capability

A wide variety of options and configurations are available due to the modular design of the burner.

## Audience

This manual has been written for people who are already familiar with all aspects of a nozzle-mix burner and its add-on components, also referred to as "the burner system".

These aspects are:

- Design / Selection
- Use
- Maintenance

The audience is expected to have previous experience with this type of equipment.

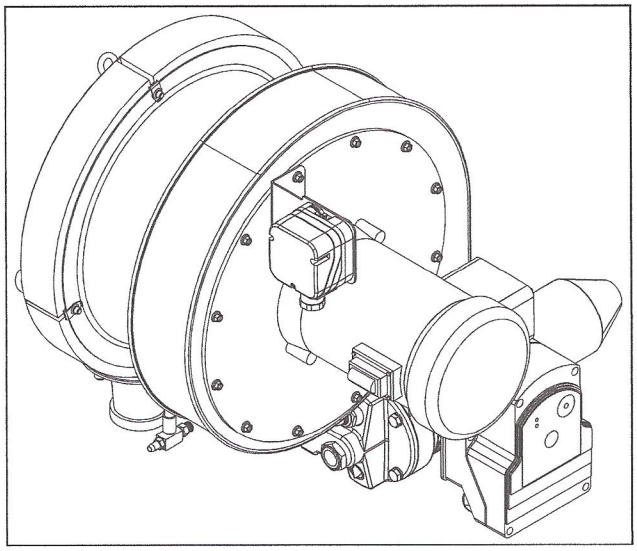

**Figure 1.1 RatioAir Burner**

## RatioAir Documents

**Design Guide No. 115**

- This document

**Datasheet, Series 115**

- Available for individual RA models
- Required to complete design and selection

**Installation Guide No. 115**

- Used with Datasheet to complete installation

**Related Documents**

- EFE 825 (Combustion Engineering Guide)
- Eclipse Bulletins and Info Guides: 710, 732, 760, 818, 830, 832, 852, 856, 610, 820, 930

**Spare Part Documents, Series No. 115**

- Recommended replacement part information

## Purpose

The purpose of this manual is to ensure that the design of a safe, effective, and trouble-free combustion system is carried out.

# Safety



Important notices which help provide safe burner operation will be found in this section. To avoid personal injury and damage to the property or facility, the following warnings must be observed. All involved personnel should read this entire manual carefully before attempting to start or operate this system. If any part of the information in this manual is not understood, contact Eclipse before continuing.

## Safety Warnings

**⚠ DANGER**

- **The burners, described herein, are designed to mix fuel with air and burn the resulting mixture. All fuel burning devices are capable of producing fires and explosions if improperly applied, installed, adjusted, controlled or maintained.**
- **Do not bypass any safety feature; fire or explosion could result.**
- **Never try to light a burner if it shows signs of damage or malfunction.**

**⚠ WARNING**

- **The burner and duct sections are likely to have HOT surfaces. Always wear the appropriate protective equipment when approaching the burner.**
- **Eclipse products are designed to minimize the use of materials that contain crystalline silica. Examples of these chemicals are: respirable crystalline silica from bricks, cement or other masonry products and respirable refractory ceramic fibers from insulating blankets, boards, or gaskets. Despite these efforts, dust created by sanding, sawing, grinding, cutting and other construction activities could release crystalline silica. Crystalline silica is known to cause cancer, and health risks from the exposure to these chemicals vary depending on the frequency and length of exposure to these chemicals. To reduce the risk, limit exposure to these chemicals, work in a well-ventilated area and wear approved personal protective safety equipment for these chemicals.**

**NOTICE**

- **This manual provides information regarding the use of these burners for their specific design purpose. Do not deviate from any instructions or application limits described herein without written approval from Eclipse.**

## Capabilities

Only qualified personnel, with sufficient mechanical aptitude and experience with combustion equipment, should adjust, maintain or troubleshoot any mechanical or electrical part of this system. Contact Eclipse for any needed commissioning assistance.

## Operator Training

The best safety precaution is an alert and trained operator. Train new operators thoroughly and have them demonstrate an adequate understanding of the equipment and its operation. A regular retraining schedule should be administered to ensure operators maintain a high degree of proficiency. Contact Eclipse for any needed site-specific training.

## Replacement Parts

Order replacement parts from Eclipse only. All Eclipse approved valves or switches should carry UL, FM, CSA, CGA and/or CE approval where applicable.

# System Design 3

## Design

The design process is divided into the following steps:

1. **Burner Option Selection Including:**
   - Burner Model / Size
   - Firing Position
   - Burner Configuration
   - Fuel Type
   - Fuel Supply
   - Combustor Type & Material
   - Air Supply
   - Control Motor
   - Limit Switch
   - Loading Line Type
   - Air Pressure Switch
   - Piping Connection
   - Flame Supervision
2. **Blower Option Selection Including:**
   - Power Supply Frequency
   - Pressure and Flow
   - Blower Motor Type
   - Blower Inlet
   - Blower Configuration
3. **Control Methodology Including:**
   - Burner Control
4. **Ignition System Including:**
   - Ignition Transformer
   - Trial for Ignition
   - Ignition Gas Piping
5. **Flame Monitoring Control System Including:**
   - Flame Sensor
   - Flame Monitoring Control
6. **Main Gas Shut-Off Valve Train Including:**
   - Component Selection
   - Valve Train Size
7. **Process Temperature Control System**

## Step 1: Burner Option Selection

Step 1 describes how to select burner options to suit an application. Use the RatioAir Price Lists and Datasheets, series 115 when following this selection process.

**⚠ CAUTION**

- **Consult EFE-825 Eclipse Engineering Guide or contact Eclipse if you have special conditions or questions.**

### Burner Model / Size Selection

Consider the following when selecting the burner size:

- **Heat Input:** Calculate the required heat input to achieve the required heat balance. The burner combustor option selected will affect available heat output from the burner.
- **Power Supply Frequency:** Burner capacity will vary with power supply frequency (50 Hz or 60 Hz power).
- **Combustion Chamber Pressure:** Consider the effects that large or varying chamber pressures have on burner performance.
- **Altitude:** The maximum burner capacity is reduced by approximately 3% each 1000 feet (300 meters) above sea level.
- **Combustion Air Supply:** Combustion air should be fresh (20.9% $O_2$) and clean (without particles or corrosives).
- **Combustion Air Temperature:** Changes in air supply temperature can affect the burner capacity. Contact Eclipse if the combustion air temperature exceeds 150°F (65°C).
- **Fuel Type:** Variation in calorific value, specific gravity and WOBBE index will affect burner performance. If any of these parameters change more than ±5% from Figure 3.1 contact Eclipse to check the suitability of the fuel. Performance data, dimensions and specifications are given for each RatioAir in Datasheets 115-1 through 115-11.

## Firing Position

- Vertical Down Firing
- Vertical Up Firing
- Horizontal Firing

## Burner Configuration

Select configuration.

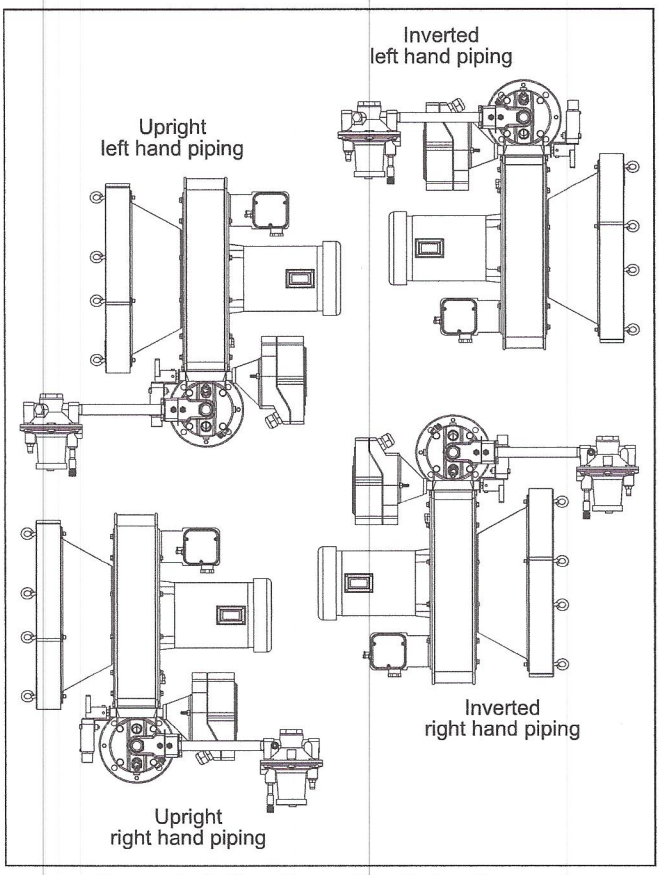


**Figure 3.1. Configuration Selection and Motor Orientation Choice**

## Fuel Type

**Table 3.1 Fuel Type**

| Fuel | Symbol | Gross Heating Value | Specific Gravity | WOBBE Index |
|---|---|---|---|---|
| Natural Gas | $CH_4$90%+ | 1000 Btu/ft$^3$ (40.1 MJ/m$^3$) | 0.60 | 1290 Btu/ft$^3$ |
| Propane | $C_3H_8$ | 2525 Btu/ft$^3$ (101.2 MJ/m$^3$) | 1.55 | 2028 Btu/ft$^3$ |
| Butane | $C_4H_{10}$ | 3330 Btu/ft$^3$ (133.7 MJ/m$^3$) | 2.09 | 2303 Btu/ft$^3$ |
| Btu/ft$^3$ @ standard conditions (MJ/m$^3$ @ normal conditions) | | | | |

If using an alternative fuel supply, contact Eclipse with an accurate breakdown of the fuel components.

## Fuel Supply

**Select the turndown required.**

The high turndown option includes a ratio regulator with bypass adjustment for lower inputs.

## Combustor Type & Material

Select a combustor type based on the application. Low temperature applications use an alloy combustion tube. High temperature applications use a silicon carbide (SiC) tube or a refractory block & holder. See datasheet series 115 for specific temperature ratings. For vertical down-firing applications with block and holder, consult factory.

## Air Supply

The RatioAir burner can be ordered with a combustion air blower supplied and mounted directly to the burner body or depending on burner size with a threaded, flanged, or welded inlet to accommodate a remote blower. The remote blower must provide adequate pressure and flow per the appropriate datasheet series 115.

### Control Motor

Select a control motor. Kromschroder IC20 actuators are standard on all Eclipse packaged burners. RatioAir burners can be ordered with control motor bracket and mounting hardware only. Customer supplied control motors must conform to these specifications:

- rotation not to exceed 2 rpm
- minimum torque of 25 in-lb (2,8 Nm)
- 90° stroke
- continuous modulating or high/low modulating control
- reversible direction of rotation
- certain applications may require control motors with a limit switch or switches if:
  - the burner capacity is to be limited to fit an application
  - the chamber is to be fired with positive or negative pressure
  - the chamber pressure is outside the range -1" w.c. to +1" w.c. (-2,5 to 2,5 mbar)
  - there is a need to indicate a high and/or low fire air butterfly valve position

### Air Butterfly Valve Limiting Switches

Limit switches monitor the position of the integral air butterfly valve. Select high, low, high and low, or no limit switch option. Proper selection is based on preference, control system, and local code.

### Loading Line Type

All RatioAir burners have the option of plastic, flexible braided stainless steel or rigid stainless tube loading line. Selection depends on application and environment.

### Air Pressure Switch

The air pressure switch provides a signal to the monitoring system when there is not enough air pressure from the blower. If a switch is selected, it will be factory mounted.

**⚠ WARNING**

- **Eclipse supports the NFPA regulation requiring, as a minimum standard for main gas shut-off systems, the use of an air pressure switch in conjunction with other system components.**

### Gas Pipe Connection

Select the gas pipe connection (pipe thread type).

The piping, burner gas inlet, and ratio regulator are threaded using the customer selected pipe thread option.

### Flame Supervision

Determine if a flame rod or an ultraviolet (UV) scanner will be required. Flame rods are available on model RA0025, RA0040, RA0075 and RA0100 burners with alloy or SiC tubes. A flamerod can also be used on RA0200 burners but with upright left hand piping or inverted right hand piping configurations only. All other options and models require UV scanners. If a UV scanner is required, it must be ordered separately.

NOTE: Some flame monitoring devices do not work with alternative fuels. Consult Eclipse for assistance when selecting flame monitoring equipment for alternative fuels.

See Step 5 for additional information on flame supervision selection.

**⚠ WARNING**

- **A UV scanner could possibly detect another burner's flame if it is in the line of sight, and falsely indicate flame presence.**

## Step 2: Blower Option Selection

Standard blower options are listed in datasheet series 115, additional blower options are available through Eclipse. Price and leadtime may vary.

### Power Supply Frequency

Select the 50Hz or 60Hz option. The 50Hz blower motors have IEC frames and are CE marked. The 60Hz motors have NEMA frames.

### Pressure & Flow

Eclipse offers SMJ blowers for remote blower applications. The RatioAir burner can be ordered with a combustion air blower supplied and mounted directly to the burner body or with a threaded, flanged, or welded inlet to accommodate a remote blower. Remote blower must provide adequate pressure and flow per the appropriate datasheet series 115.

### Blower Motor Type

Motor types include various options: voltages, single or three phase, TEFC or automotive duty enclosures.

### Blower Inlet

When selecting an inlet, consider the following:

- amount and size of particles in the air
- sound level requirements
- space limitations
- cleanliness requirements of the process

### Motor Orientation

Right-hand blower motor orientation is standard. If left-hand blower motor orientation is required, contact factory.

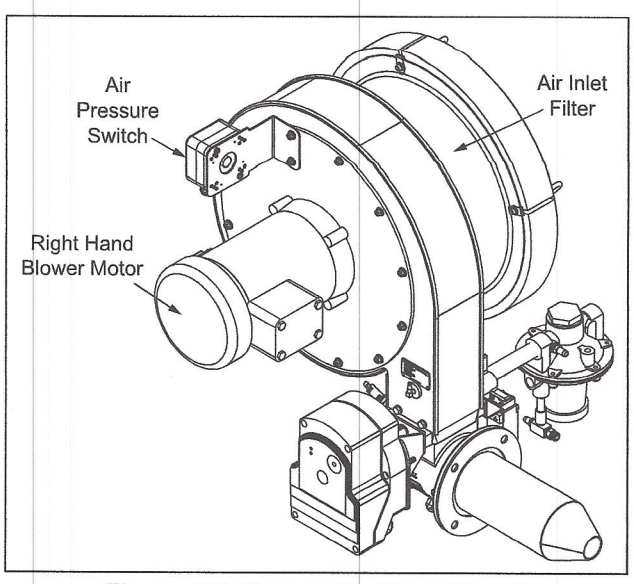


**Figure 3.2. Burner Configuration & Motor Orientation Choice**

## Step 3: Control Methodology

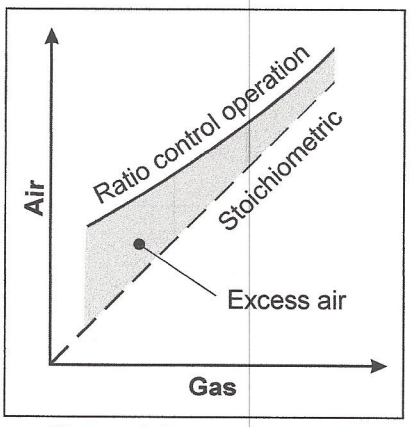


**Figure 3.3. Air : Gas Flow**

All standard RatioAir burners are designed for:

- air:gas ratio controlled combustion
- 10 - 15% excess air at high fire
- higher excess air at low fire

### Burner Control

RatioAir burners come with a ratio regulator that maintains the air:gas ratio, see Figure 3.3.

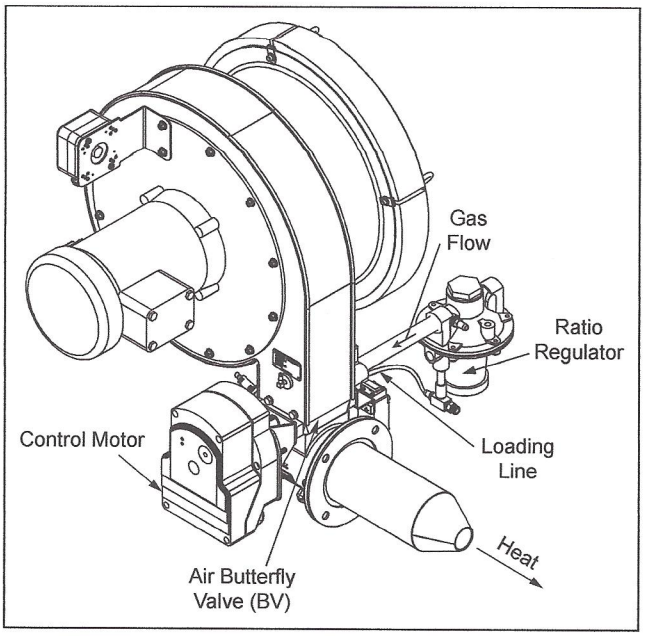


**Figure 3.4. Basic Burner Components**

- A control signal is sent from a process temperature controller (sold separately) to the control motor. (Refer to Bulletin 818C or contact Eclipse for further information on temperature controllers.)

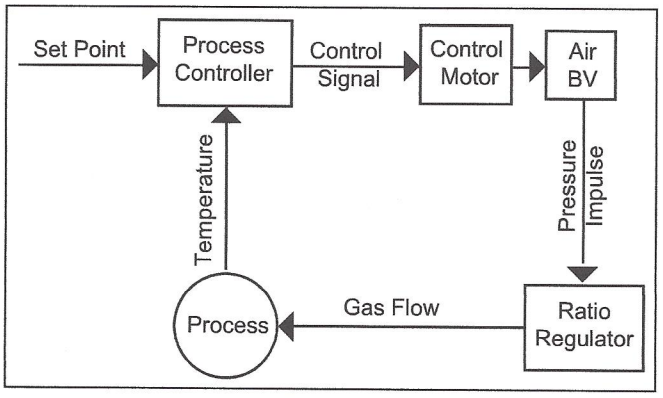


**Figure 3.5. Basic Control Loop**

- The control motor modulates the air butterfly valve (BV) which controls the combustion air flow.
- Air pressure in the burner body sends an impulse down the loading line to the ratio regulator.
- The ratio regulator controls the gas flow in proportion to the air flow.

**⚠ WARNING**

- **Do not use other control methods, such as fixed-air control, or alter the ratio regulator or burner piping without prior approval from Eclipse.**

## Step 4: Ignition System

### Ignition Transformer

For the ignition system, use a transformer with:

- secondary voltage 6,000 to 8,000 VAC
- minimum secondary current 0.02 amps
- full wave output

**DO NOT USE the following:**

- twin outlet
- distributor type
- electronic type

### Trial for Ignition

It is recommended that low fire start be used. However, under certain circumstances RatioAir burners are capable of direct spark ignition at higher gas inputs.

Most local safety codes and insurance requirements limit the maximum trial for ignition time (the time it takes for a burner to ignite). These requirements vary from one location to another; check your local codes and comply to the strictest codes applicable.

The time it takes for a burner to ignite depends on the following:

- the distance between the gas shut-off valve and the burner
- the air:gas ratio
- the gas flow conditions at start-up

The possibility exists where the low fire settings are insufficient to ignite the burner within the maximum trial for ignition time. The following options must be considered under these conditions:

- start at higher gas input levels
- resize and/or relocate the gas controls
- use bypass start gas

### Ignition Gas Piping

RatioAir burners are capable of ignition with either low fire or bypass start gas.

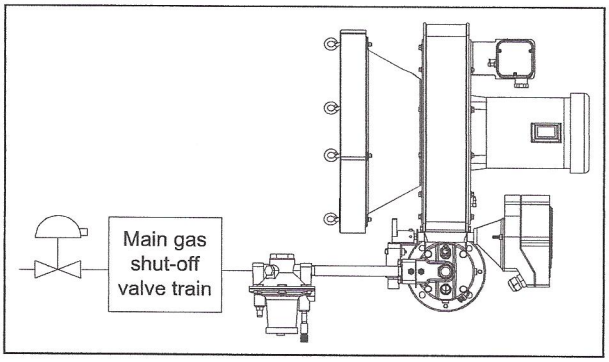


**Figure 3.6. Low Fire Start**

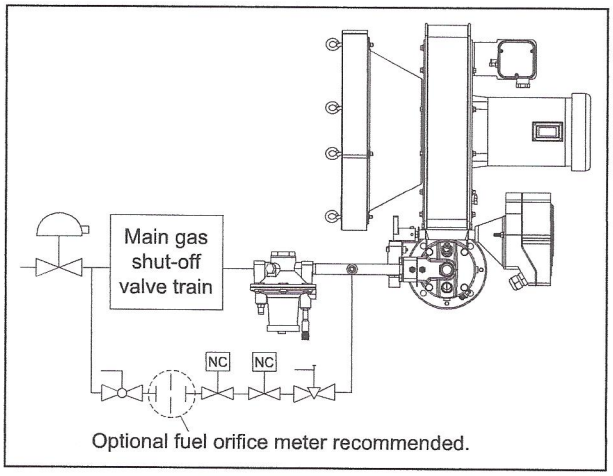


**Figure 3.7. Pilot Start (Optional)**

An optional fuel orifice meter connected in the start gas piping can simplify start-up and adjustment. To start the burner at the lowest possible gas input, select a fuel orifice meter for 5" to 10" w.c. pressure drop when the gas flow is at the burner's rated low fire.

## Step 5: Flame Monitoring Control System

The flame monitoring control system consists of two main components:

- Flame Sensor
- Flame Monitoring Control

### Flame Sensor

Two types can be used on a RatioAir Burner:

- Flame rod
- UV scanner

Flame rods are available on model RA0025, RA0040, RA0075 and RA0100 burners with alloy or SiC tubes. A flame rod can also be used on RA0200 burners but with upright left hand piping or inverted right hand piping configurations only. Further information about flame rods can be found in:

- Info Guide 832

A UV scanner can be used on all RatioAir Burner sizes. The UC scanner must be compatible to the flame monitoring control that is used. Refer to the manual of your selected control for proper selection of the scanner.

### Flame Monitoring Control

The flame monitoring control is the equipment that processes the signal from the flame sensor and controls the start-up and shut-down sequences.

For flame monitoring control you may select several options:

- flame monitoring control for each burner: if one burner goes down, only that burner will be shut off
- multiple burner flame monitoring control: if one burner goes down, all burners will be shut off

***NOTICE***

- **If other controls are considered, contact Eclipse to determine how burner performance may be affected. Flame monitoring controls that have lower sensitivity flame detecting circuits may limit burner turndown and change the requirements for ignition. Flame monitoring controls that stop the spark as soon as a signal is detected may prevent establishment of flame, particularly when using UV scanners. The flame monitoring control must maintain the spark for a fixed time interval that is long enough for ignition.**

**DO NOT USE the following:**

- Flame monitoring relays which interrupt the trial for ignition when the flame is detected.
- Flame sensors which supply a weak signal.
- Flame monitoring relays with low sensitivity.

## Step 6: Main Gas Shut-Off Valve Train

### Component Selection

Eclipse can help in the design of a main gas shut-off valve train that satisfies the customer and complies with all local safety standards and codes set by the authorities within that jurisdiction. Contact Eclipse for further information.

**NOTE:** Eclipse supports NFPA regulations (two gas shut-off valves as a minimum standard for main gas shut-off systems).

### Valve Train Size

Fuel pressure supplied to the ratio regulator inlet must be within the range specified in the RatioAir datasheet. The valve train should be sized sufficiently to provide the specified pressure.

**⚠ WARNING**

- **Do not operate RatioAir burners with gas inlet pressure less than the minimum listed on the RatioAir datasheet. Lower gas inlet pressure may cause the ratio regulator to remain fully open at lower inputs as the burner transitions from low to high fire. This can result in the possible accumulation of unburned fuel in the burner which, in extreme situations, could cause a fire or an explosion.**

## Step 7: Process Temp Control System

### Consult Eclipse

The process temperature control system is used to control and monitor the temperature of the system. There is a wide variety of control and measuring equipment available.

For details, please contact Eclipse.

# Appendix

## Conversion Factors

### Metric to English

| From | To | Multiply By |
|---|---|---|
| actual cubic meter/h ($am^3/h$) | actual cubic foot/h (acfh) | 35.31 |
| normal cubic meter/h ($Nm^3/h$) | standard cubic foot /h (scfh) | 38.04 |
| degrees Celsius (°C) | degrees Fahrenheit (°F) | (°C x 9/5) + 32 |
| kilogram (kg) | pound (lb) | 2.205 |
| kilowatt (kW) | Btu/h | 3415 |
| meter (m) | foot (ft) | 3.281 |
| millibar (mbar) | inches water column ("w.c.) | 0.402 |
| millibar (mbar) | pounds/sq in (psi) | $14.5 \times 10^{-3}$ |
| millimeter (mm) | inch (in) | $3.94 \times 10^{-2}$ |
| $MJ/Nm^3$ | $Btu/ft^3$ (standard) | 26.86 |

### Metric to Metric

| From | To | Multiply By |
|---|---|---|
| kiloPascals (kPa) | millibar (mbar) | 10 |
| meter (m) | millimeter (mm) | 1000 |
| millibar (mbar) | kiloPascals (kPa) | 0.1 |
| millimeter (mm) | meter (m) | 0.001 |

### English to Metric

| From | To | Multiply By |
|---|---|---|
| actual cubic foot/h (acfh) | actual cubic meter/h ($am^3/h$) | $2.832 \times 10^{-2}$ |
| standard cubic foot /h (scfh) | normal cubic meter/h ($Nm^3/h$) | $2.629 \times 10^{-2}$ |
| degrees Fahrenheit (°F) | degrees Celsius (°C) | (°F - 32) x 5/9 |
| pound (lb) | kilogram (kg) | 0.454 |
| Btu/h | kilowatt (kW) | $0.293 \times 10^{-3}$ |
| foot (ft) | meter (m) | 0.3048 |
| inches water column ("w.c.) | millibar (mbar) | 2.489 |
| pounds/sq in (psi) | millibar (mbar) | 68.95 |
| inch (in) | millimeter (mm) | 25.4 |
| $Btu/ft^3$ (standard) | $MJ/Nm^3$ | $37.2 \times 10^{-3}$ |

# System Schematics

| Symbol | Appearance | Name | Remarks | Bulletin/ Info Guide |
|---|---|---|---|---|
| 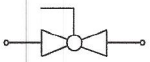 |  | Gas Cock | Gas cocks are used to manually shut off the gas supply. | 710 |
| 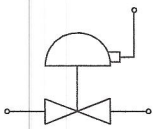 | 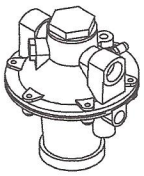 | Ratio Regulator | A ratio regulator is used to control the air/gas ratio. The ratio regulator is a sealed unit that adjusts the gas pressure in ratio with the air pressure. To do this, it measures the air pressure with a pressure sensing line, the impulse line. This impulse line is connected between the top of the ratio regulator and the burner body. | |
| Main Gas Shut-Off Valve Train | | Main Gas Shut-Off Valve Train | Eclipse strongly endorses NFPA as a minimum. | 790/791 |
| Pilot Gas Shut-Off Valve Train | | Pilot Gas Valve Train | Eclipse strongly endorses NFPA as a minimum. | 790/791 |
| 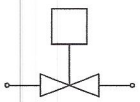 | 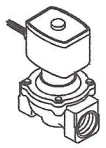 | Automatic Shut-Off Valve | Shut-off valves are used to automatically shut off the gas supply on a gas system or a burner. | 760 |
|  |  | Orifice Meter | Orifice meters are used to measure flow. | 930 |
| 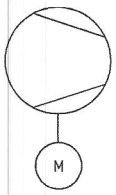  | 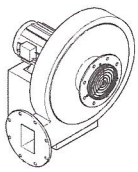 | Combustion Air Blower | The combustion air blower provides the combustion air to the burner(s). | 610 |

| Symbol | Appearance | Name | Remarks | Bulletin/ Info Guide |
|---|---|---|---|---|
| 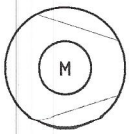  | 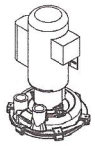 | Hermetic Booster | Booster is used to increase gas pressure. | 620 |
| 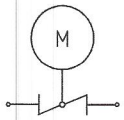  | 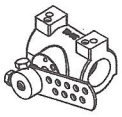 | Automatic Butterfly Valve | Automatic butterfly valves are typically used to set the output of the system. | 720 |
| 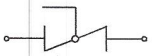 | 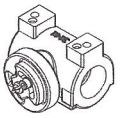 | Manual Butterfly Valve | Manual butterfly valves are used to balance the air or gas flow at each burner. | 720 |
| 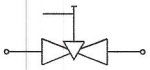 |  | Adjustable Limiting Orifice | Adjustable limiting orifices are used for fine adjustment of gas flow. | 728/730 |
| 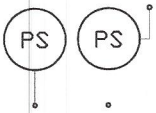  |  | Pressure Switch | A switch activated by rise or fall in pressure. A manual reset version requires pushing a button to transfer the contacts when the pressure set point is satisfied. | 840 |
| 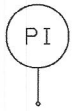  |  | Pressure Gauge | A device to indicate pressure. | 940 |
|  |  | Check Valve | A check valve permits flow only in one direction and is used to prevent back flow of gas. | 780 |
| 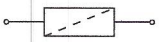 | 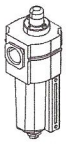 | Strainer | A strainer traps sediment to prevent blockage of sensitive components downstream. | |
|  |  | Flexible Connector | Flexible connectors isolate components from vibration, mechanical, and thermal stresses. | |
| 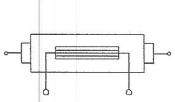 | 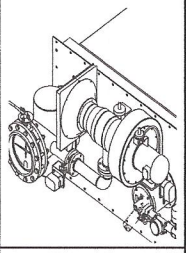 | Heat Exchanger | Heat exchangers transfer heat from one medium to another. | 500 |
|  | | Pressure Taps | Pressure taps measure static pressure. | |

# Notes

ECLIPSE®

© Eclipse, Inc. All Rights Reserved

elster
Thermal Solutions

# Eclipse ThermAir Burners

## Model TA0100

*Data sheet Edition 08.15*

*Version 3*

| Parameter | | Specification | |
|---|---|---|---|
| | | Packaged Blower Size | |
| **Maximum Input, Btu/h (kW)**[1] [2]<br>*To maintain 15% air with the standard air orifice and standard combustion air blower* | Chamber Pressure "w.c. (mbar) | 3" w.c. (60 Hz) | 6" w.c. (Nominal 50 & 60 Hz) |
| | -1.0 (-2.5) | 1,141,000 (334) | 1,030,000 (302) |
| | 0.0 (0.0) | 1,000,000 (293) | 1,000,000 (293) |
| | 1.0 (2.5) | 835,000 (244) | 900,000 (264) |
| **Minimum Input, Btu/h (kW)**<br>*For lower inputs, contact Eclipse, Inc.* | Natural Gas | 26,000 (7.6) | 33,000 (9.7) |
| | Propane | 28,000 (8.2) | 33,000 (9.7) |
| | Butane | 30,000 (8.8) | 33,000 (9.7) |
| **Main Gas Inlet Pressure, "w.c. (mbar)**<br>*Fuel pressure in gas inlet (Tap B)* | | 9.8 (24.4) | 6.3 (16) |
| **High Fire Visible Flame Length, inches (mm)**<br>*Measured from the outlet end of the combustor* | Natural Gas | 47 (1194) | |
| | Propane, Butane | 51 (1295) | |
| | Alloy Tube | 1500 (820) | |
| **Maximum Chamber Temperture, °F (°C)**<br>*For higher temperatures, contact Eclipse, Inc..* | SiC Tube | 1900 (1040) | |
| **Flame Detection** | | Flamerod or UV Scanner | |
| **Fuels**[4]<br>*For any other mixed gases, contact Eclipse, Inc.* | | Natural Gas, Propane or Butane | |
| **Blower Motor Power, Hp** | | 3" w.c. @ 11500 scfh, 0.33 hp | 6" w.c. @ 16500 scfh, 0.50 hp |
| **Weight, lbs (kg)**[5] | With Blower | 143 (65) | |
| | Without Blower | 93 (42) | |
| **Approvals** | | АИ30 | |

1. Maximum inputs are given for the standard packaged combustion air blower without an air filter.
2. Blower motor service factors greater than 1.0 may be required when firing into negative chamber pressure applications. For specific application questions, contact Eclipse.
3. See Design Guide 114 for more information about typical fuel composition and properties.
4. All weights are approximate.

- All information based on laboratory testing in neutral (0.0" w.c.) chamber with standard combustion design. Different chamber conditions and/or combustor design will affect the data.
- All inputs are based upon gross calorific values and standard conditions: 1 atmosphere, 70°F (21°C).
- Eclipse reserves the right to change the construction and/or configuration of our products at any time without being obliged to adjust earlier supplies accordingly.

elster
Thermal Solutions

ECLIPSE®

# Performance Graphs

## Control and Operation Curve

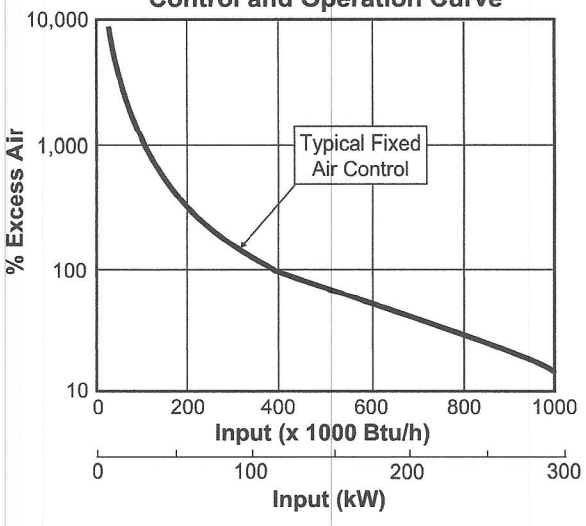


## Air Flow vs. Chamber Pressure

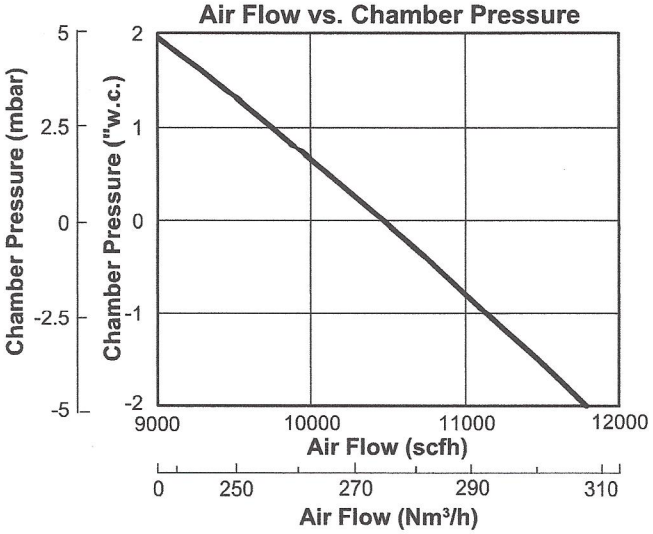


## Fuel Orifice ΔP vs. Input - 3" Blower

(ΔP Measured Between Taps B and D)

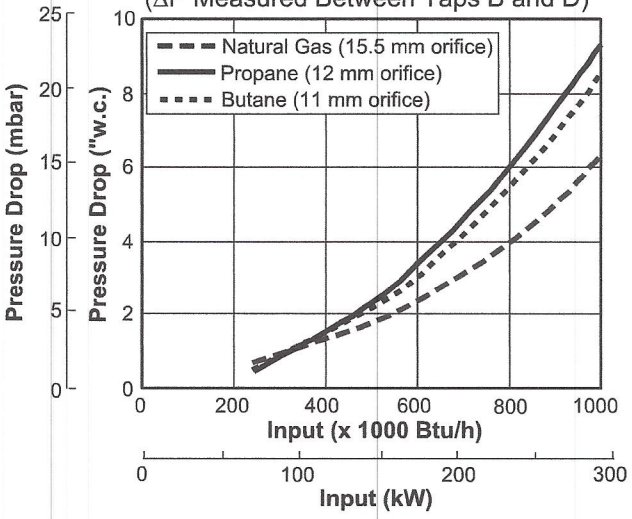


## Fuel Orifice ΔP vs. Input - 6" Blower

(ΔP Measured Between Taps B and D)

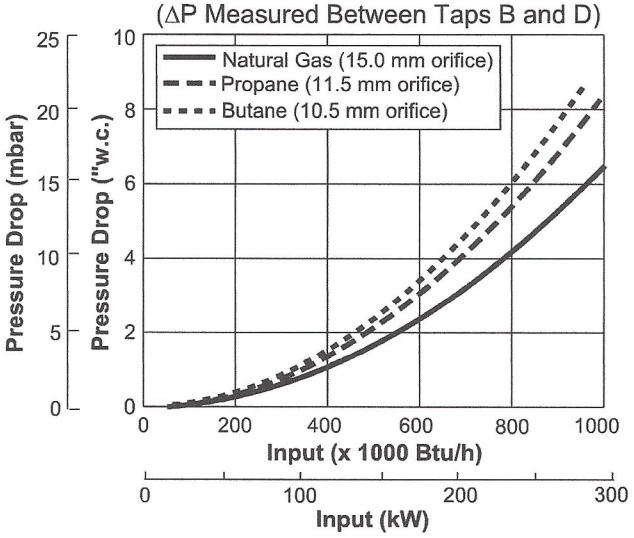


## $NO_x$ Emission (On ratio)

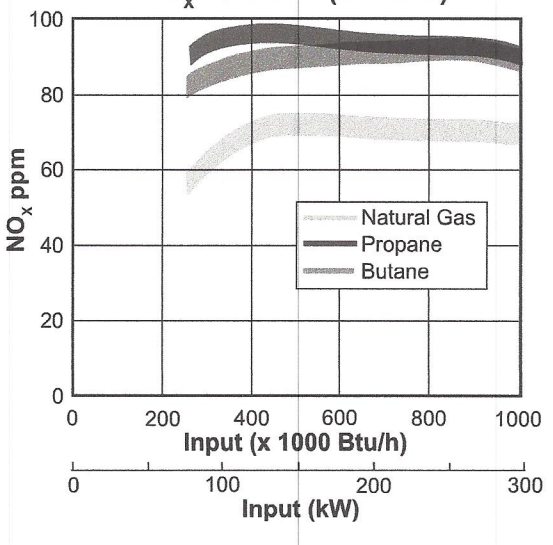


**$NO_x$ emission data is given for:**

- Ambient combustion air ~70°F (21°C)
- Minimal process air velocity
- ppm volume dry at 3% $O_2$
- Neutral chamber pressure

**Emissions are influenced by:**

- Chamber conditions
- Fuel type
- Firing rate
- Ratio regulator adjustment
- Combustion air temperature

CO emission is largely influenced by chamber conditions. Contact your local Eclipse representative for an estimate of CO emission on your application.

ECLIPSE

## Dimensions and Specifications

Dimensions in mm (inches)

| Blower Type | C |
|---|---|
| 60 Hz (6" w.c.) | 519 (20.4) |
| 50 Hz (6" w.c.) | 577 (22.7) |
| 60 Hz (3" w.c.) | 437 (17.2) |

| Combustor Type | D |
|---|---|
| Straight Alloy Tube | 141.0 (5.6) |
| Straight Silicon Tube | 147.8 (5.8) |

### Packaged Blower

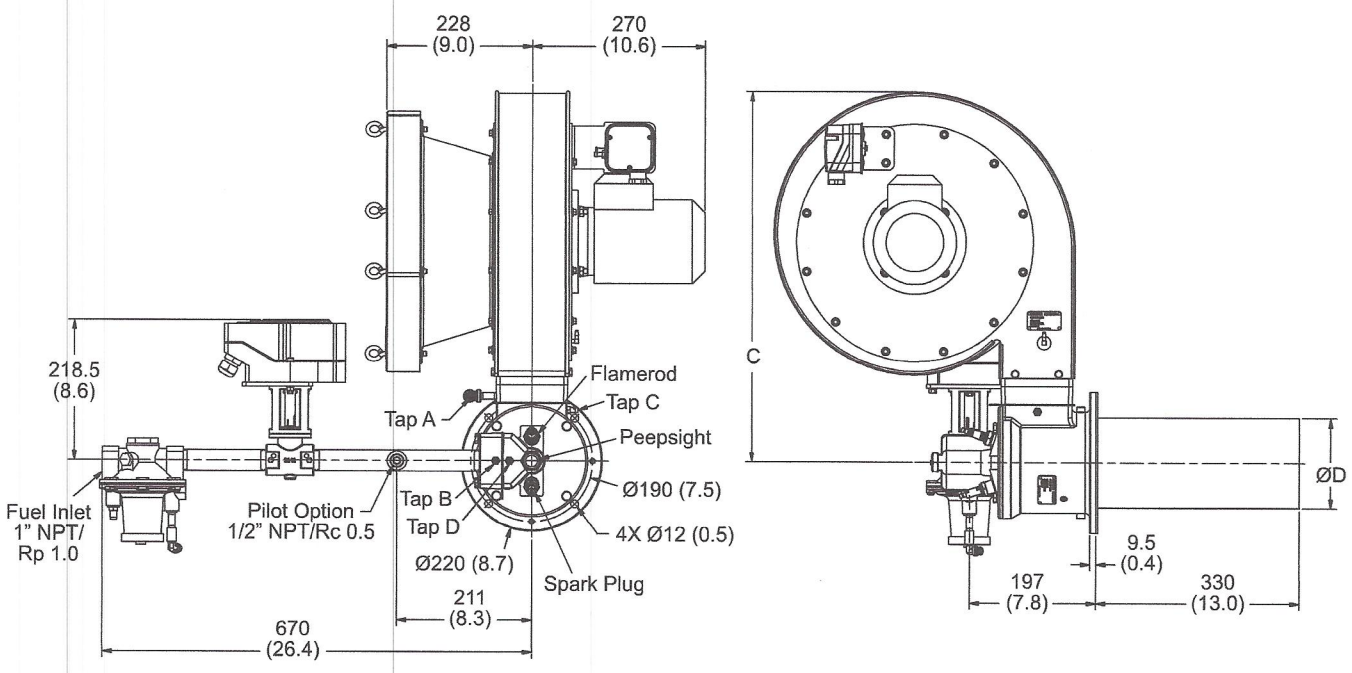


### Remote Blower

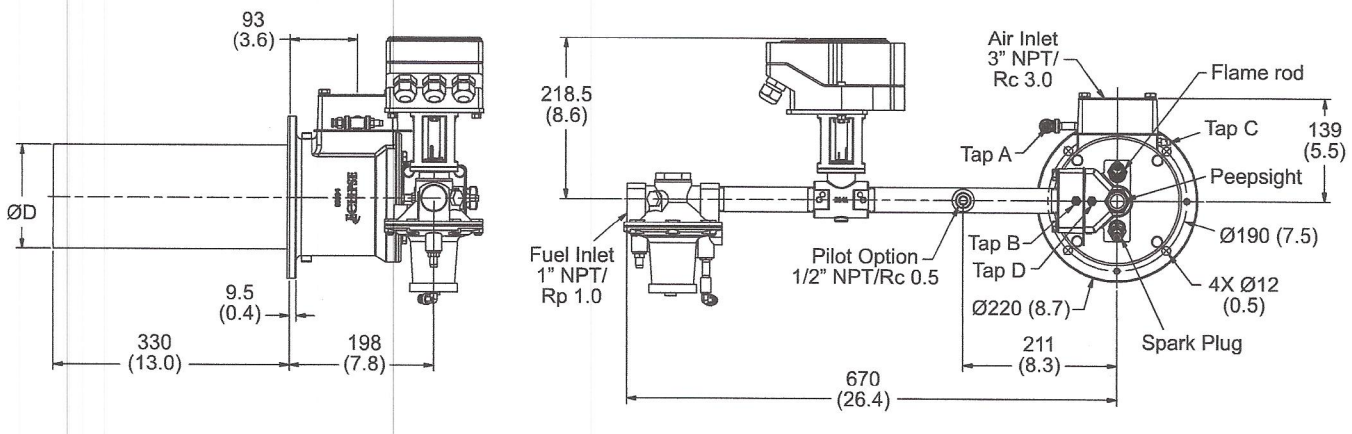

ECLIPSE®

# Piping

| Orientation (All illustrations indicate right hand blower motor.)* | | Piping Options |
|---|---|---|
| **Upright** | **Inverted** | |
| Right Hand Piping 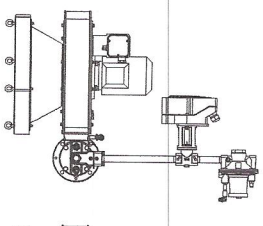 | 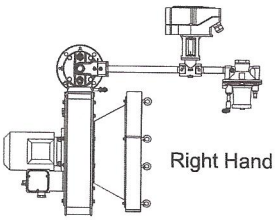 Right Hand Piping | With ratio regulator and control BV 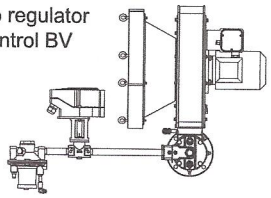 |
| Left Hand Piping 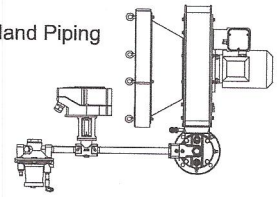 | 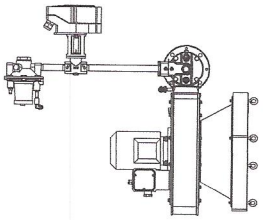 Left Hand Piping | With control BV only 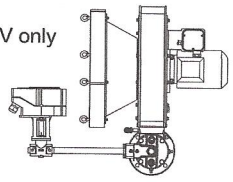 |
| No Piping 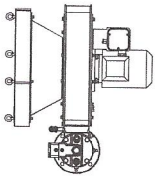 | 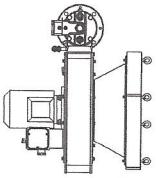 No Piping | Less ratio regulator and control BV 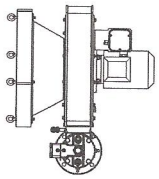 |

*Even though the blower motor is on the "left" side of the inverted units, it is still a "right hand" motor in relationship to the blower assembly.

Ratio regulator not available for 3 "w.c. packaged version

elster Thermal Solutions

© Eclipse, Inc. All Rights Reserved

| Design Guide 114 |
| --- |
| 3/2/2011 |

# Eclipse ThermAir

# Burners

## TA Series

*Version 2*

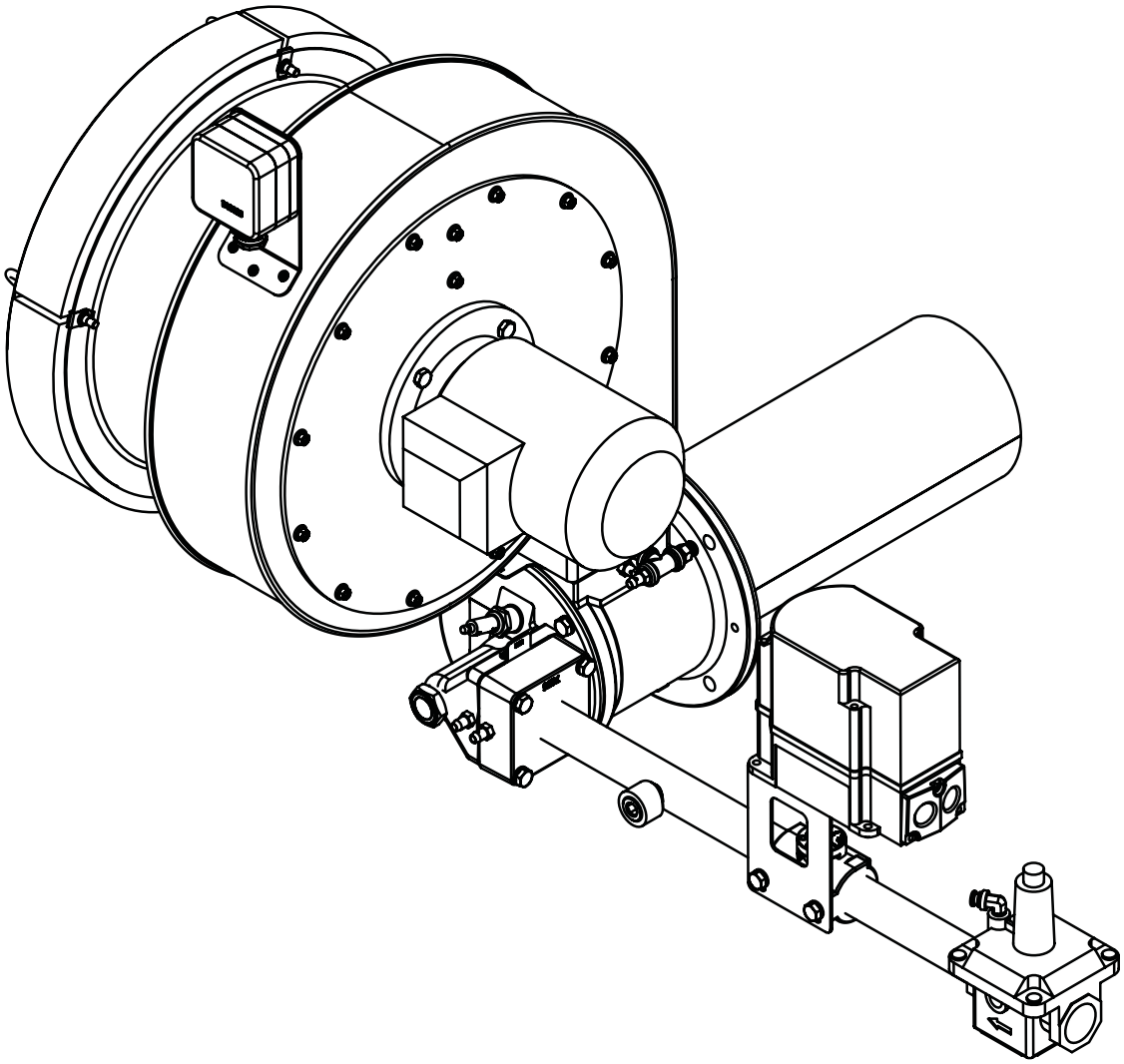

ECLIPSE®

Innovative Thermal Solutions

## Copyright

Copyright 2010 by Eclipse, Inc. All rights reserved worldwide. This publication is protected by federal regulation and shall not be copied, distributed, transmitted, transcribed or translated into any human or computer language, in any form or by any means, to any third parties, without the express written consent of Eclipse, Inc.

## Disclaimer Notice

In accordance with the manufacture's policy of continual product improvement, the product presented in this brochure is subject to change without notice or obligation.

The material in this manual is believed adequate for the intended use of the product. If the product is used for purposes other than those specified herein, confirmation of validity and suitability must be obtained. Eclipse warrants that the product itself does not infringe upon any United States patents. No further warranty is expressed or implied.

## Liability & Warranty

We have made every effort to make this manual as accurate and complete as possible. Should you find errors or omissions, please bring them to our attention so that we may correct them. In this way we hope to improve our product documentation for the benefit of our customers. Please send your corrections and comments to our Marketing Communications Manager.

It must be understood that Eclipse's liability for its product, whether due to breach of warranty, negligence, strict liability, or otherwise is limited to the furnishing of replacement parts and Eclipse will not be liable for any other injury, loss, damage or expenses, whether direct or consequential, including but not limited to loss of use, income, or damage to material arising in connection with the sale, installation, use of, inability to use, or the repair or replacement of Eclipse's products.

Any operation expressly prohibited in this manual, any adjustment, or assembly procedures not recommended or authorized in these instructions shall void the warranty.

## Document Conventions

There are several special symbols in this document. You must know their meaning and importance.

The explanation of these symbols follows below. Please read it thoroughly.

## How To Get Help

If you need help, contact your local Eclipse representative. You can also contact Eclipse at:

1665 Elmwood Rd.
Rockford, Illinois 61103 U.S.A.
Phone: 815-877-3031
Fax: 815-877-3336
http://www.eclipsenet.com

Please have the information on the product label available when contacting the factory so we may better serve you.




---

This is the safety alert symbol. It is used to alert you to potential personal injury hazards. Obey all safety messages that follow this symbol to avoid possible injury or death.

**DANGER** Indicates a hazardous situation which, if not avoided, will result in death or serious injury.

**WARNING** Indicates a hazardous situation which, if not avoided, could result in death or serious injury.

**CAUTION** Indicates a hazardous situation which, if not avoided, could result in minor or moderate injury.

***NOTICE*** Is used to address practices not related to personal injury.

**NOTE** Indicates an important part of text. Read thoroughly.

# Table of Contents


**Introduction** ..... **4**

Product Description ..... 4

Audience ..... 4

Purpose ..... 4

Related Documents ..... 4

**Safety** ..... **5**

Safety Warnings ..... 5

Capabilities ..... 5

Operator Training ..... 5

Replacement Parts ..... 5

**System Design** ..... **6**

Step 1: Burner Option Selection ..... 6

Step 2: Blower Option Selection ..... 8

Step 3: Control Methodology ..... 9

Step 4: Ignition System ..... 10

Step 5: Flame Monitoring Control System ..... 11

Step 6: Main Gas Shut-Off Valve Train ..... 11

**Appendix** ..... **i**

Conversion Factors ..... i

Key to System Schematics ..... ii

# Introduction 1

## Product Description

The Eclipse ThermAir burner is a nozzle-mixing burner, with a packaged air blower, that is designed to fire with fixed combustion air over a wide gas turndown range. Fixed air operation plus integral air and gas orifices make the ThermAir one of the simplest burners to quickly setup and adjust.

ThermAir burners are ideal on heaters, textile ovens and in situations where the fuel is highly variable (800 BTU/CF to 3200 BTU/CF). They are perfect for ovens needing additional air to carry moisture away from the product being heated.

The burner is designed for:

- Reliable Burner Operation
- Simple Burner Adjustment
- Direct Spark Ignition
- Multiple Fuel Capability

A wide variety of options and configurations are available due to teh modular design of the burner.

## Audience

This manual has been written for people who are already familiar with all aspects of a nozzle-mix burner and its add-on components, also referred to as “the burner system”.

These aspects are:

- Design / Selection
- Use
- Maintenance

The audience is expected to have previous experience with this type of equipment.

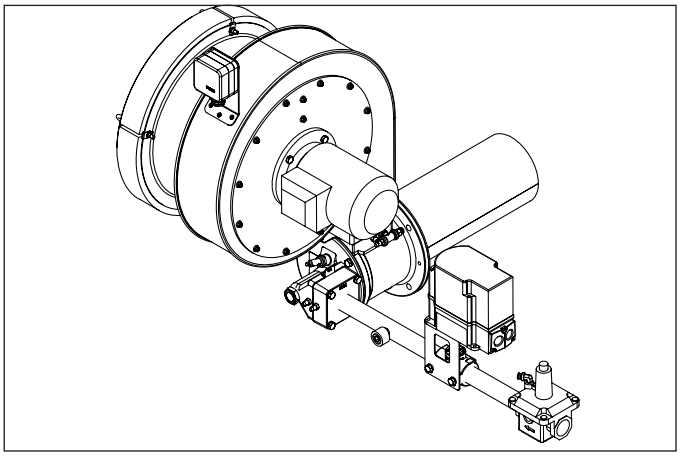

**Figure 1.1. ThermAir Burner**

## ThermAir Documents

**Design Guide No. 114**

- This document

**Datasheet, Series 114**

- Available for individual TA models
- Required to complete design and selection

**Installation Guide No. 114**

- Used with datasheet to complete installation

**Spare Part Documents, Series No. 114**

- Recommended replacement part information

## Related Documents

- EFE 825 (Combustion Engineering Guide)
- 710, 732, 742, 760, 818, 830, 832, 852, 856, 610, 820, 902, 930

## Purpose

The purpose of this manual is to ensure that the design of a safe, effective, and trouble-free combustion system is carried out.

# Safety

# 2

## Introduction

Important notices about safe burner operation will be found in this section. Read this entire manual before attempting to start the system. If any part of the information in this manual is not understood, contact Eclipse before continuing.

## Safety Warnings

**DANGER**

- **The ThermAir burner, described herein, is designed to mix fuel with air and burn the resulting mixture. All fuel handling devices are capable of producing fires and explosions if improperly applied, installed, adjusted, controlled, or maintained.**
- **Do not bypass any safety feature; fires and explosions can be caused.**
- **Never try to light the burner if it shows signs of damage or malfunction.**

**WARNING**

- **The burner might have HOT surfaces. Always wear protective clothing when approaching the burner.**

***NOTICE***

- **This manual provides information in the use of these burners for their specific design purpose. Do not deviate from any instructions or application limits described herein without written advice from Eclipse. Read the entire manual before attempting to start this system.**

## Capabilities

Adjustment, maintenance and troubleshooting of the mechanical and the electrical parts of this system should be done by qualified personnel with good mechanical aptitude and experience with combustion equipment.

## Operator Training

The best safety precaution is an alert and trained operator. Train new operators thoroughly and have them demonstrate an adequate understanding of the equipment and its operation. A regular retraining schedule should be administered to ensure operators maintain a high degree of proficiency.

## Replacement Parts

Order replacement parts from Eclipse only. All Eclipse approved, customer supplied valves, or switches should carry UL, FM, CSA, CGA, and/or CE approval, where applicable.

# System Design 3

## Design

The design process is divided into the following steps:

1. Burner Option Selection Including:
   - Burner Model / Size
   - Firing Position
   - Burner Configuration
   - Fuel Type
   - Fuel Supply
   - Combustor Type & Material
   - Air Supply
   - Control Motor
   - Limit Switch
   - Loading Line Type
   - Air Pressure Switch
   - Pipe Connection
   - Flame Supervision
2. Blower Option Selection Including:
   - Power Supply Frequency
   - Pressure and Flow
   - Blower Motor Type
   - Blower Inlet
   - Blower Configuration
3. Control Methodology Including:
   - Burner Control
4. Ignition System Including:
   - Ignition Transformer
   - Trial for Ignition
   - Ignition Gas Piping
5. Flame Monitoring Control System Including:
   - Flame Sensor
   - Flame Monitoring Control
6. Main Gas Shut-Off Valve Train Including:
   - Component Selection
   - Valve Train Size
7. Process Temperature Control System

## Step 1: Burner Option Selection

Step 1 describes how to select burner options to suit an application. Use the ThermAir Datasheet series 114 when following this selection process.

**⚠ CAUTION**

- **Consult EFE-825 Eclipse Engineering Guide or contact Eclipse if you have special conditions or questions.**

### Burner Model / Size Selection

Consider the following when selecting the burner size:

- **Heat Input**: Calculate the required heat input to achieve the required heat balance.
- **Power Supply Frequency:** Burner capacity will vary with power supply frequency (50 Hz or 60 Hz power).
- **Combustion Chamber Pressure:** Consider the effects that large or varying chamber pressures have on burner performance.
- **Altitude:** The maximum burner capacity is reduced by approximately 3% each 1000 feet (300 meters) above sea level.
- **Combustion Air Supply**: Combustion air should be fresh (20.9% $O_2$) and clean (without particles or corrosives).
- **Combustion Air Temperature:** Changes in air supply temperature can affect the burner capacity. Contact Eclipse if the combustion air temperature exceeds 150°F (65°C).
- **Fuel Type:** Variation in calorific value, specific gravity and WOBBE index will affect burner performance. If any of these parameters change more than 5% from Figure 3.1 contact Eclipse to check the suitability of the fuel. Performance data, dimensions and specifications are given for each ThermAir in Datasheets 114-1 through 114-9.

## Firing Position

- Vertical Down Firing
- Vertical Up Firing
- Horizontal Firing

## Burner Configuration

Select configuration.

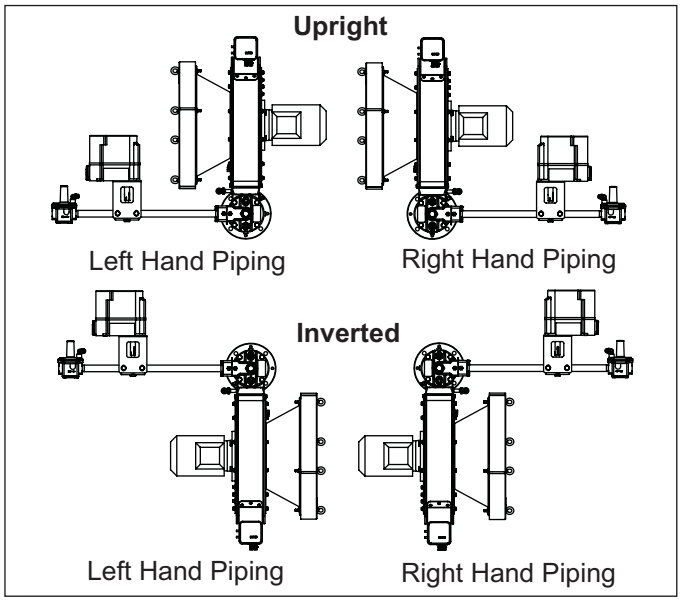


**Figure 3.1 Burner Configuration**

## Fuel Type

| Fuel | Symbol | Gross Heating Value | Specific Gravity |
|---|---|---|---|
| Natural Gas | $CH_4$ 90%+ | 1000 BTU/ft$^3$ (40 MJ/m$^3$) | 0.60 |
| Propane | $C_3H_8$ | 2570 BTU/ft$^3$ (40 MJ/m$^3$) | 1.52 |
| Butane | $C_4H_{10}$ | 3250 BTU/ft$^3$ (40 MJ/m$^3$) | 1.95 |
| BTU/ft$^3$ @ standard conditions (MJ/m$^3$ @ normal conditions) | | | |

If using an alternative fuel supply, contact Eclipse with an accurate breakdown of the fuel components.

## Fuel Supply

Select the turndown required.

Select the gas pipe thread type and the gas control options desired. Gas control options are:

- Stripped, N.P.T. or Rc connections
- Basic, Modulating gas control valve (N.P.T. or Rc)
- Complete, Modulating gas control valve and ratio regulator

The high turndown option includes a ratio regulator with bypass adjustment for lower inputs

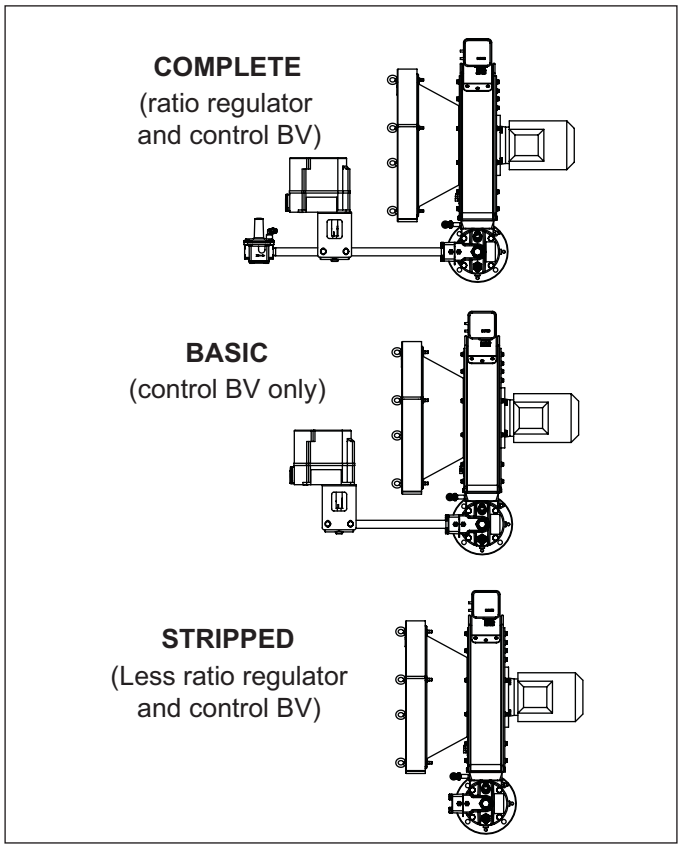


**Figure 3.2 Fuel Supply Options**

## Combustor Type & Material

Select a combustor type based on the application. Low temperature applications use an alloy combustion tube. High temperature applications use a silicon carbide (SiC) tube (sizes 0015-0200) or refractory block and holder (sizes 0300-0500). For vertical down-firing applications with block and holder, contact Eclipse.

## Air Supply

The ThermAir burner can be ordered with a combustion air blower supplied and mounted directly to the burner body or, depending on burner size, with a threaded, flanged, or welded inlet to accommodate a remote blower. The remote blower must provide adequate pressure and flow per the appropriate datasheet series 114.

## Control Motor

Select a control motor. Eclipse Trilogy T500 actuators are standard on all Eclipse packaged burners, other control motor options are available which Eclipse will mount to the burner. ThermAir burners can be ordered with control motor bracket and mounting hardware only. Customer supplied control motors must conform to these specifications:

- rotation not to exceed 2 rpm
- minimum torque of 25 in-lb (2,8 Nm)
- 90° stroke
- continuous modulating or high/low modulating control
- reversible direction or rotation
- certain applications may require control motors with a limit switch or switches if:
  - the burner capacity is to be limited to fit an application
  - the chamber is to be fired with positive or negative pressure
  - the chamber pressure is outside the range -1" w.c. to +1" w.c. (-2,5 to 2,5 mbar)
  - there is a need to indicate a high and/or low fire air butterfly valve position

## Air Pressure Switch

The air pressure switch provides a signal to the monitoring system when there is not enough air pressure from the blower. If a switch is selected, it will be factory mounted.

**⚠ WARNING**

- **Eclipse supports the NFPA regulation requiring, as a minimum standard for main gas shut-off systems, the use of an air pressure switch in conjunction with other system components.**

## Loading Line Type

All ThermAir burners have the option of plastic, flexible braided stainless steel or rigid stainless tube loading line. Selection depends on application and environment.

## Pipe Connection

Select the gas pipe connection (pipe thread type).

The piping, burner gas inlet, and ratio regulator are threaded using the customer selected pipe thread option.

## Flame Supervision

Determine if a flame rod or an ultraviolet (UV) scanner will be required. Flame rods are available on models TA0015-TA0100 burners with alloy or SiC tubes. All other options and models require UV scanners. If a UV scanner is required, it must be ordered separately.

**NOTE:** Some flame monitoring devices do not work with alternative fuels. Consult Eclipse for assistance when selecting flame monitoring equipment for alternative fuels.

See Step 5 for additional information on flame supervision selection.

**⚠ WARNING**

- **A UV scanner could possibly detect another burner's flame if it is in the line of sight, and falsely indicate flame presence.**

## Step 2: Blower Option Selection

Standard blower options are listed in datasheet series 114, additional blower options are available through Eclipse. Price and lead time may vary.

## Power Supply Frequency

Select the 50Hz or 60Hz option. The 50Hz blower motors have IEC frames and are CE marked. The 60Hz motors have NEMA frames.

## Pressure & Flow

Eclipse offers SMJ blowers for remote blower applications. The ThermAir burner can be ordered with a combustion air blower supplied and mounted directly to the burner body or with a threaded, flanged, or welded inlet to accomodate a remote blower. Remote blower must provide adequate pressure and flow per the appropriate datasheet series 114.

## Blower Motor Type

Motor types include various options: voltages, single or three phase, TEFC or automotive duty enclosures.

## Blower Inlet

When selecting an inlet, consider the following:

- amount and size of particles in the air
- sound requirements
- space limitations
- cleanliness requirements of the process

## Blower Configuration

Right-hand blower motor configuration is standard. If left-hand blower configuration is required, contact Eclipse.

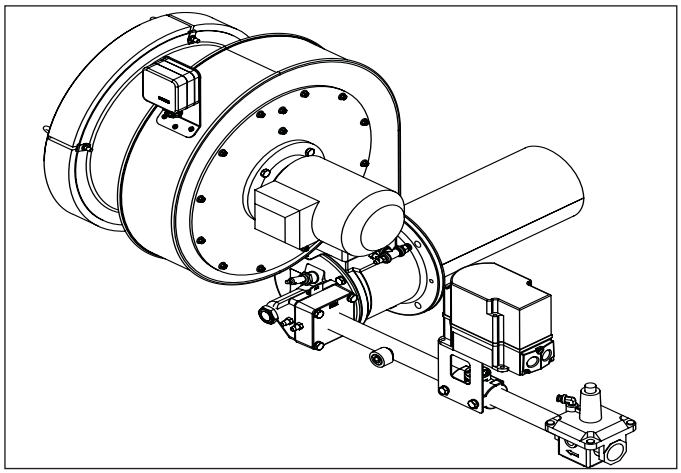

**Figure 3.3 Right Hand Blower Motor Orientation**

## Step 3: Control Methodology

### Gas Turndown

The entire ThermAir burner family is capable of gas turndown of greater than 30:1 based upon starting at high fire. A typical single burner installation would be controlled by a modulating gas valve. Leakage flow through this valve in the closed position could exceed the desired low fire input. If this is the case, consider an alternate control method to obtain your desired low fire.

### Control Methods

There are numerous gas control options possible to provide a reliable gas control/ignition system. The method of control you select and the type of "Gas Control Options" you select will have a large impact on burner performance and ignition reliability. These options and their variations are outlined in the following schematics.

**With Ratio-Regulator**

A ThermAir burner equipped with a packaged blower and a ratio-regulator is ignited via direct spark at low fire.

- **Air**

  Air flow to the burner is fixed.

- **Gas**

  High fire gas flow is limited by a metering gas orifice, sized for a given loading line pressure to the ratio-regulator, installed in the burner at the gas inlet. Gas flow to the burner is controlled by the modulating gas valve in the gas line. Although the Ratio-Regulator does not control gas flow, it will provide for ease of burner set-up and additional safety if there is reduced combustion air pressure and/or flow.

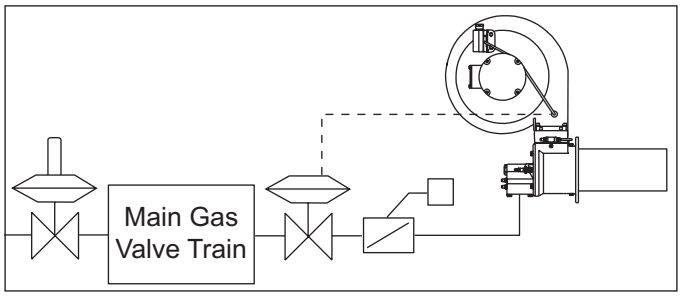


**Figure 3.4 Packaged Blower with Ratio-Regulator**

**Without Ratio-Regulator**

Refer to "Packaged Blower Burner Adjustment" in ThermAir Installation Guide for start and stop adjustment instructions.

- **Air**

  Air flow to the burner is fixed.

- **Gas**

  High fire gas flow of a ThermAir burner not equipped with a ratio-regulator is controlled by the outlet pressure of the main gas pressure regulator. The main gas pressure regulator must be adjusted to change high fire gas flow.

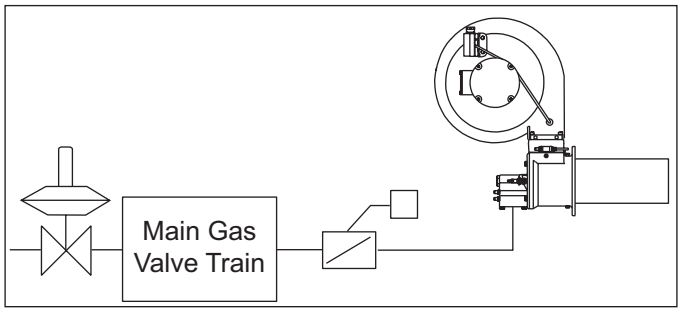


**Figure 3.5 Packaged Blower without Ratio-Regulator**

**The Use of Blocking Valves**

**NOTE:** The position of the gas blocking valve(s) relative to the ratio-regulator will have an impact on burner performance.

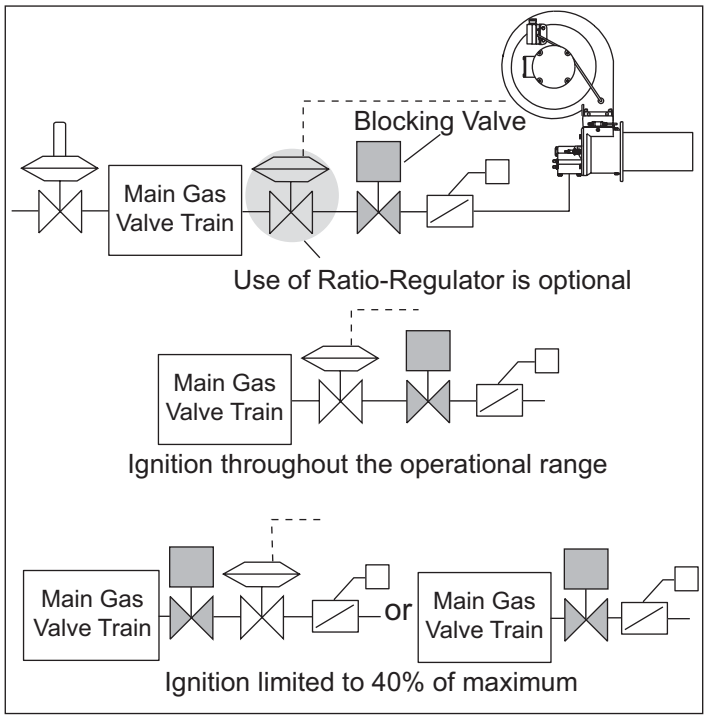


**Figure 3.6 Use of Blocking Valves**

## Step 4: Trial for Ignition

It is recommended that low fire start be used. Local safety and insurance codes require limits on the maximum trial for ignition period. These limits vary from one location to the next. Ensure that you are in compliance with the strictest requirement applicable to your installation.

The time it takes for a burner to ignite depends upon:

- the distance from the gas shut-off valve to the burner
- the gas flow conditions at start-up

It is possible to have low fire too low to ignite the burner within the maximum trial for ignition period. Under these circumstances you must consider one of the following options:

- start at higher input level
- resize and/or relocate the gas controls
- use bypass start gas

## Bypass Start Gas (Optional)

A bypass start gas circuit provides gas flow around gas control valves during the trial for ignition period. Bypass start gas may be required if the automatic gas control valves are not located close to the burner.

The solenoid valve in the bypass line plus the automatic gas shut-off valves are opened during the trial for ignition period. If a flame is established, the bypass solenoid closes at the end of the trial for ignition period while the automatic gas control valves remain open. If a flame is not established, then both the bypass solenoid and the automatic shut-off valves close.

**Bypass Start Gas Circuit Schematics**

Key points to consider when providing bypass start gas for ignition.

- Locate the bypass solenoid valve as close to the burner as possible.
- Provide some means for flow adjustment.
- To provide the bypass start gas circuit with a constant gas pressure:
  - Connect to the main gas line downstream of the main gas pressure regulator. (See Figure 3.7)
  - Provide a bypass gas pressure regulator. (See Figure 3.8)
- The downstream gas connection can be either through the peepsight location in the rear cover or into the main gas line to the burner.

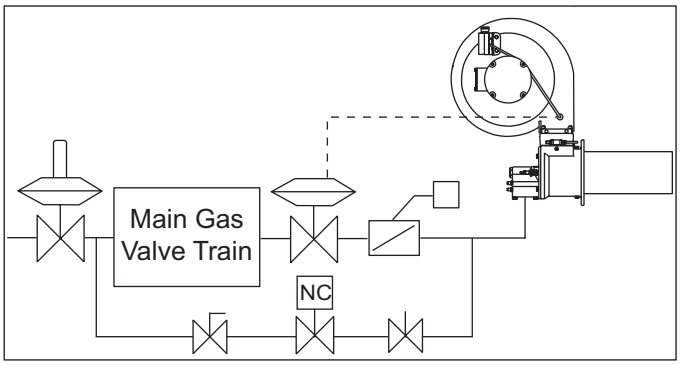


**Figure 3.7 Bypass Gas Pressure Regulator via Main Gas Pressure Regulator**

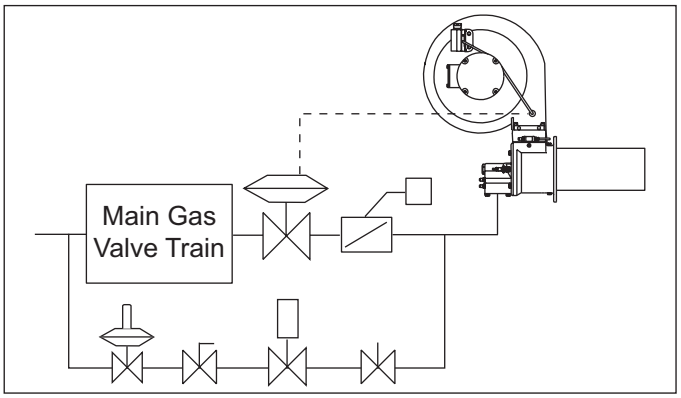


**Figure 3.8 Bypass Gas Pressure Regulator via Independent Pressure Regulator**

## Ignition Transformer

For the ignition system, use a transformer with:

- secondary voltage 6000 to 8000 VAC
- minimum secondary current 0.02 amps
- full wave output

**DO NOT USE** the following:

- twin outlet
- distributor type
- electronic type

## Step 5: Flame Monitoring Control System

**The flame monitoring control system consists of two main components:**

- Flame Sensor
- Flame Monitoring Control

### Flame Sensor

Two types can be used on a ThermAir Burner:

- Flamerod
- UV scanner.

Flamerods are available on model TA0015-TA0100 burners with alloy or SiC tubes. Further information about flamerods can be found in:

- Info Guide 832

A UV scanner can be used on all ThermAir burner sizes. The UV scanner must be compatible to the flame monitoring control that is used. Refer to the manual of your selected control for proper selection of the scanner.

### Flame Monitoring Control

The flame monitoring control is the equipment that processes the signal from the flame sensor and controls the start-up and shut-down sequences.

For flame monitoring control you may select several options:

- flame monitoring control for each burner: if one burner goes down, only that burner will be shut off
- multiple burner flame monitoring control: if one burner goes down, all burners will be shut off

Eclipse recommends the following flame monitoring controls:

- Trilogy series T400; see Instruction Manual 830
- Veri-Flame series 5600; see Instruction Manual 818
- Bi-Flame series 6500; see Instruction Manual 826
- Multi-Flame series 6000; see Instruction Manual 820

***NOTICE***

- **If other controls are considered, contact Eclipse to determine how burner performance may be affected. Flame monitoring controls that have lower sensitivity flame detecting circuits may limit burner turndown and change the requirements for ignition. Flame monitoring controls that stop the spark as soon as a signal is detected may prevent establishment of flame, particularly when using UV scanners. The flame monitoring control must maintain the spark for a fixed time interval that is long enough for ignition.**

**DO NOT USE** the following:

- Flame monitoring relays which interrupt the trial for ignition when the flame is detected.
- Flame sensors which supply a weak signal.
- Flame monitoring relays with low sensitivity.

## Step 6: Main Gas Shut-Off Valve Train

### Component Selection

Eclipse can help in the design of a main gas shutoff valve train that satisfies the customer and complies with all local safety standards and codes set by the authorities within that jurisdiction. Contact Eclipse for further information.

**NOTE:** Eclipse supports NFPA regulations (two gas shut-off valves as a minimum standard for main gas shutoff systems).

### Valve Train Size

Fuel pressure supplied to the ratio regulator inlet (when used) must be at least 15" w.c. (37.5mbar). It should not exceed the maximum pressure rating of the ratio-regulator. The valve train should be sized sufficiently to provide the specified pressure.

**⚠ WARNING**

- **Do not operate ThermAirs with gas inlet pressure less than the loading line pressure. Lower gas inlet pressures may cause the ratio regulator to remain fully open with reduced air flow. This could result in the possible accumulation of unburned fuel in the burner which, in extreme situations, could cause a fire or an explosion.**

## Step 7: Process Temp Control System

### Consult Eclipse

The process temperature control system is used to control and monitor the temperature of the system. There is a wide variety of control and measuring equipment available.

For details, please contact Eclipse.

# Appendix

## Conversion Factors

### Metric to English

| From | To | Multiply By |
|---|---|---|
| actual cubic meter/hr ($am^3/h$) | actual cubic foot/hr (acfh) | 35.31 |
| normal cubic meter/hr ($Nm^3/h$) | standard cubic foot /hr (scfh) | 38.04 |
| degrees Celsius (°C) | degrees Fahrenheit (°F) | (°C x 9/5) + 32 |
| kilogram (kg) | pound (lb) | 2.205 |
| kilowatt (kW) | BTU/hr | 3415 |
| meter (m) | foot (ft) | 3.281 |
| millibar (mbar) | inches water column ("w.c.) | 0.402 |
| millibar (mbar) | pounds/sq in (psi) | $14.5 \times 10^{-3}$ |
| millimeter (mm) | inch (in) | $3.94 \times 10^{-2}$ |
| $MJ/Nm^3$ | $BTU/ft^3$ (standard) | 26.86 |

### Metric to Metric

| From | To | Multiply By |
|---|---|---|
| kiloPascals (kPa) | millibar (mbar) | 10 |
| meter (m) | millimeter (mm) | 1000 |
| millibar (mbar) | kiloPascals (kPa) | 0.1 |
| millimeter (mm) | meter (m) | 0.001 |

### English to Metric

| From | To | Multiply By |
|---|---|---|
| actual cubic foot/hr (acfh) | actual cubic meter/hr ($am^3/h$) | $2.832 \times 10^{-2}$ |
| standard cubic foot /hr (scfh) | normal cubic meter/hr ($Nm^3/h$) | $2.629 \times 10^{-2}$ |
| degrees Fahrenheit (°F) | degrees Celsius (°C) | (°F - 32) x 5/9 |
| pound (lb) | kilogram (kg) | 0.454 |
| BTU/hr | kilowatt (kW) | $0.293 \times 10^{-3}$ |
| foot (ft) | meter (m) | 0.3048 |
| inches water column ("w.c.) | millibar (mbar) | 2.489 |
| pounds/sq in (psi) | millibar (mbar) | 68.95 |
| inch (in) | millimeter (mm) | 25.4 |
| $BTU/ft^3$ (standard) | $MJ/Nm^3$ | $37.2 \times 10^{-3}$ |

## Key to System Schematics

| Symbol | Appearance | Name | Remarks | Bulletin/Info Guide |
|---|---|---|---|---|
| 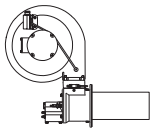 | | ThermAir | | |
|  | | Main Gas Shutoff Valve Train | Eclipse, Inc. strongly endorses NFPA as a minimum | 756 |
| 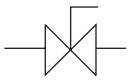 | 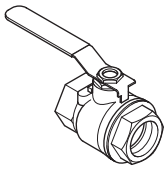 | Gas Cock | Gas cocks are used to manually shut off the gas supply on both sides of the main gas shut-off valve train. | 710 |
| 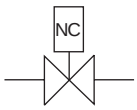 | 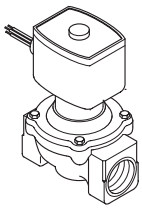 | Solenoid Valve (normally closed) | Solenoid valves are used to automatically shut off the gas supply on a bypass gas system or on small capacity burners. | |
| 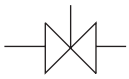 |  | Adjustable Limiting Orifice | Adjustable limiting orifices are used for fine adjustment of gas flow. | 730 |
| 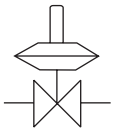 | | Pressure Regulator | A pressure regulator reduces gas pressure to a stable, usable pressure. | 682 |
| 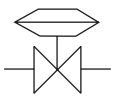 | 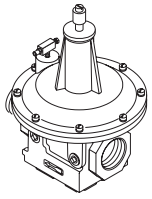 | Ratio Regulator | The ratio regulator adjusts the gas flow in ratio with the air flow. It controls the outlet pressure equal to the impulse line pressure. The impulse line is connected between the top of the ratio regulator and the blower housing. | 742 |
| 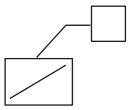 | | Automatic Gas Control Valve | An automatic gas control valve adjusts gas flow to the burner based on control system requirements. | 720 |
|  | | Impulse Line | | |

ECLIPSE®
Innovative Thermal Solutions
www.eclipsenet.com

# SECTION 3
# FLAME SAFETY

US FURNACES, LLC MAX 4000

**Instruction Manual 818**
6/1/06

Eclipse Combustion

# Veri-Flame Single Burner Monitoring System

*Model 5600*
*Version 1.21*

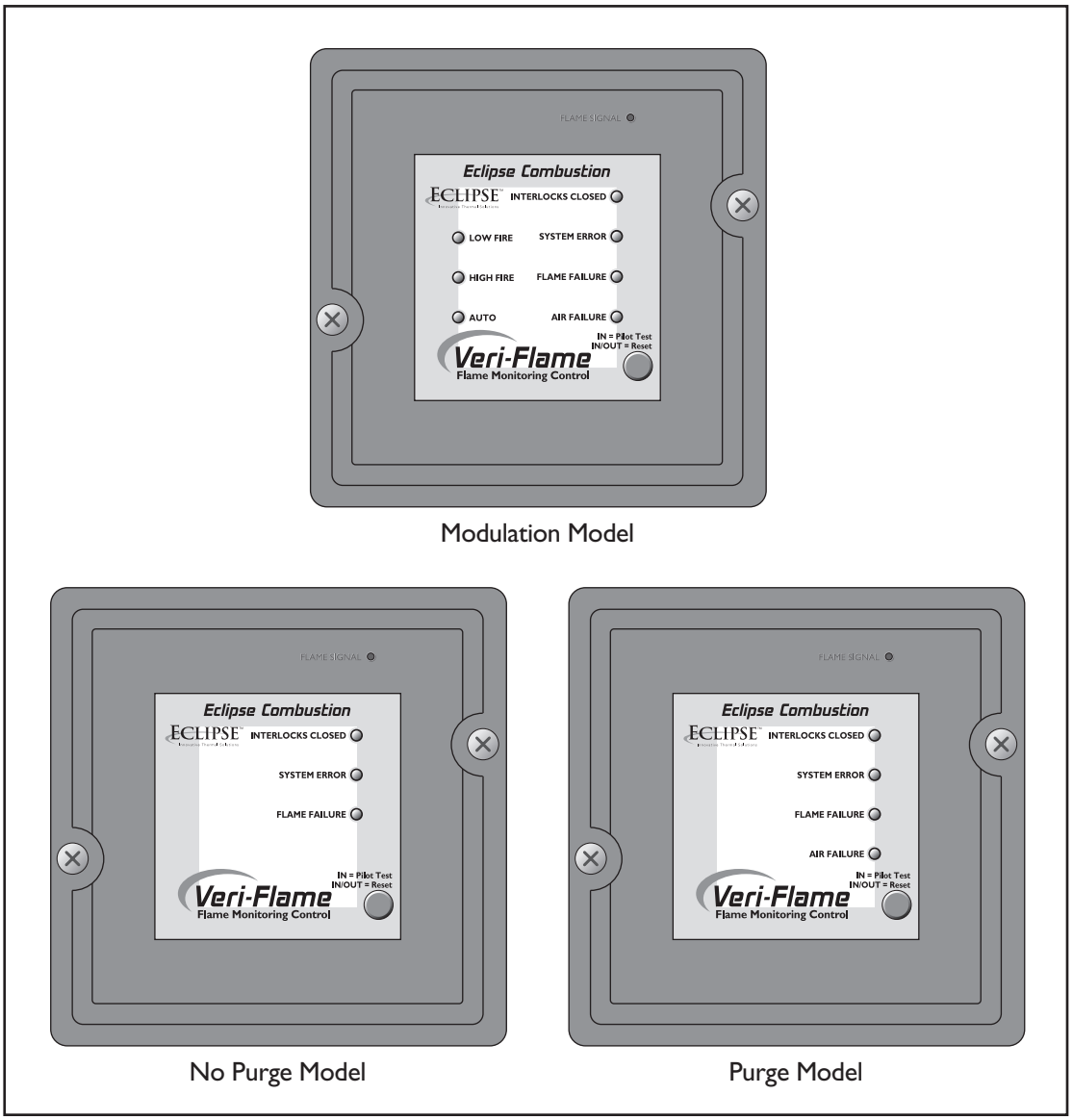


ECLIPSE™
Innovative Thermal Solutions

## Copyright

Copyright 2006 by Eclipse, Inc. All rights reserved worldwide. This publication is protected by federal regulation and shall not be copied, distributed, transmitted, transcribed or translated into any human or computer language, in any form or by any means, to any third parties, without the express written consent of Eclipse, Inc., Rockford, Illinois, U.S.A.

## Disclaimer notice

In accordance with the manufacturer's policy of continual product improvement, the product presented in this brochure is subject to change without notice or obligation.

The material in this manual is believed adequate for the intended use of the product. If the product is used for purposes other than those specified herein, confirmation of validity and suitability must be obtained. Eclipse, Inc. warrants that the product itself does not infringe upon any United States patents. No further warranty is expressed or implied.

We have made every effort to make this manual as accurate and complete as possible. Should you find errors or omissions, please bring them to our attention so that we may correct them. In this way we hope to improve our product documentation for the benefit of our customers. Please send your corrections and comments to our Marketing Communications Manager.

## Liability and Warranty

It must be understood that Eclipse's liability for its products, whether due to breach of warranty, negligence, strict liability, or otherwise, is limited to the furnishing of burner monitoring system replacement parts and Eclipse will not be liable for any other injury, loss, damage or expenses, whether direct or consequential, including but not limited to loss of use, income of, or damage to material arising in connection with the sale, installation, use of, inability to use or the repair or replacement of Eclipse products.

Eclipse, Inc., for a period of one year from shipment, warrants each Veri-Flame burner monitoring system to the original purchaser to be free from defects in material and workmanship under normal use as defined hereafter. Any operation expressly prohibited in this Guide, any adjustment or assembly procedures not recommended or authorized in these instructions, shall void the warranty.

# About this manual

## Audience

This manual has been written for the people who select and install the product and the technicians who work on it. They are expected to have previous experience with this kind of equipment.

## Scope

This manual contains essential information for the proper installation and operation of the Eclipse Veri-Flame Burner Monitoring System.

Following the instructions in this manual should assure trouble-free installation and operation of the monitoring system. Read this manual carefully. Make sure that you understand its structure and contents. Obey all the safety instructions.

Do not deviate from any instructions or application limits in this manual without written consent from Eclipse Combustion, Inc.

If you do not understand any part of the information in this manual, do not continue. Contact your Eclipse sales office or Eclipse Combustion, Inc., Rockford, Illinois.

## Document Conventions

There are several special symbols in this document. You must know their meaning and importance.

The explanation of these symbols follows. Please read it thoroughly.



**Danger:**

**Indicates hazards or unsafe practices which WILL result in severe personal injury or even death.**
**Only qualified and well trained personnel are allowed to carry out these instructions or procedures.**
**Act with great care and follow the instructions.**



**Warning:**
**Indicates hazards or unsafe practices which could result in severe personal injury or damage.**
**Act with great care and follow the instructions.**



*Caution:*
*Indicates hazards or unsafe practices which could result in damage to the machine or minor personal injury.*
*Act carefully.*



*Note:*
*Indicates an important part of the text.*
*Read the text thoroughly.*

## How to get help

If you need help, you can contact your local Eclipse Combustion sales office. You can also contact Eclipse Combustion, Inc. at:

1665 Elmwood Road
Rockford, Illinois 61103 USA

Phone: 815-877-3031
Fax: 815-877-3336

E-mail: eclipse@eclipsenet.com
http://www.eclipsenet.com

# Table of Contents


**About this manual** ..... 3

**Table of contents** ..... 5

1 **Introduction** ..... 8
Product Description ..... 8

2 **Specifications** ..... 9
Introduction ..... 9
Specifications ..... 9
Dimensions ..... 9

3 **DIP Switch Selection** ..... 12
Introduction ..... 12
DIP Switch Location ..... 12
DIP Switch Access ..... 12
No Purge DIP Switch Settings ..... 12
Modulation & Purge DIP Switch Settings ..... 13

4 **Function Summary** ..... 14
Introduction ..... 14
Standard Features ..... 14
Combustion Air Flow Check ..... 14
Main Fuel Valve Closed switch ..... 14
Low Fire Start ..... 14
High Fire/High Fire Purge Check ..... 14
Recycle Mode ..... 14
Pilot Test Mode ..... 14
Interrupted or Intermittent Pilot ..... 15
Post Purge ..... 15
Spark, Pilot Flame & Main Flame Separation ..... 15
System Error & Lockout Conditions ..... 15
High to Low Fire Purge Modulation Capability with High to Low Fire Position Switch Interlocks ..... 16

4 Optional Features ..... 16
Pilot Test Mode Sequence ..... 16
Air Switch Input Hold ..... 16
Remote Display & Power Supply ..... 16
Status Lights & Push-buttons ..... 17
Interlocks Closed ..... 17
Air Failure ..... 17
System Error ..... 17
Burner On ..... 17
Flame Failure ..... 17
Low Fire ..... 17
High Fire ..... 17
Auto ..... 17
Test/Reset ..... 17

5 **System Installation** ..... 18
Introduction ..... 18
Interlocks and Limit Switch Input ..... 18
Combustion Air Switch Input ..... 18
Ignition Wiring ..... 18
Low Fire Input ..... 19
Main Valve Closed switch ..... 19
High Fire Input ..... 19
Remote Reset ..... 19
Remote Display & Power Supply ..... 19
Purge and No Purge Wiring Diagram (Figure 5.1) ..... 20
Modulation Wiring Diagram (Figure 5.2) ..... 20
Typical Connections for all Models (Figure 5.3) ..... 21

6 **Sensor Installation** ..... 24
Introduction ..... 24
Sensor Wiring ..... 24
Flame Rods ..... 25
Scanners ..... 25
Scanner Sighting Considerations ..... 25

7 **Test Procedures** ..... 26
Introduction ..... 26
Flame Signal Strength ..... 26
Minimum Pilot Test ..... 26
Pilot Flame Failure Test ..... 27
Main Flame Failure Test ..... 27
Spark Sighting Test ..... 27
Limits & Interlock Tests ..... 27

8 **Maintenance & Troubleshooting** ..... 28
Introduction ..... 28
Maintenance ..... 28
Monthly Checklist ..... 28
Yearly Checklist ..... 28
Troubleshooting ..... 29
LED Status ..... 30
LED Status & Conditions for No Purge Models (Table 8.1) ..... 30
LED Status & Conditions for Purge Models (Table 8.2) ..... 31
LED Status & Conditions for Modulation Models (Table 8.3) ..... 32

9 **Remote Display Messages** ..... 33
Introduction ..... 33
Veri-Flame Operating Sequence (Table 9.1) ..... 34
Remote Display Diagnostic Messages (Table 9.2) ..... 38

**Appendix** ..... 41
Conversion Factors ..... 41
Illustrated Parts List ..... 42

# Introduction

1

## Product Description

The Eclipse Combustion Veri-Flame Single Burner Monitoring System controls the start-up sequence and monitors the flame of single gas, oil, or combination gas/oil burners. There are three different models to the Veri-Flame line: the no purge, the purge and the modulation models. Each model features field selectable trial for ignition (TFI). Each model is also available for use with four types of flame sensor: ultraviolet (UV), self-check UV, solid state UV/IR and flame rod.

Required components are the Veri-Flame, matching wiring base and a flame sensor. Optional components include a remote display and cable, tester, and various scannner accessories.

The **Veri-Flame No Purge** and **Purge** models are available in three different series—5602, 5603 and 5605. The 5602 Series is UL listed, CSA certified, FM approved and GE GAP acceptable; the 5605 Series is UL listed, FM approved and GE GAP acceptable. The 5603 Series is for 240VAC applications and is FM approved. Please see instruction manual 818-2 for European CE marked versions.

The **Veri-Flame Modulation** model is available in two different series: 5602 and 5603. Both series are capable of modulation (high and low fire purging). The 5602 Series is UL listed, CSA certified, FM approved and GE GAP acceptable. The 5603 Series is for 240VAC and is FM approved.

***Figure 1.1*** **Veri-Flame Single Burner Monitoring System**
(Purge Unit Shown)



# Specifications

2

## INTRODUCTION

This section gives a detailed overview of Veri-Flame specifications and dimensions.

### Specifications

| PARAMETER | DESCRIPTION |
|---|---|
| Supply | • Series 5602 & 5605: 120 VAC (+10%, -15%), 50/60 Hz standard.<br>Series 5603: 240 VAC (+10%, -15%), 50/60 Hz standard.<br>Internal power consumption: 12 VA (excluding external connected loads). |

**Temperature Ranges**

| Unit | Model Nos. | Temperature Range |
|---|---|---|
| Veri-Flame | All Models | -40° to +60°C (-40° to +140°F) |
| 90° U.V. Scanner | 5600-90A | -20° to +60°C (0° to 140°F) |
| U.V. Scanner | 5600-91 | -20° to +125°C (0° to +257°F) |
| NEMA4 UV Scanner | 5600-91N4 | -20° to +125°C (0° to +257°F) |
| UV/IR Scanner | 5600-92SC | -20° to +80°C (0° to +176°F) |
| Self-Check U.V. | 5602-91 | -20° to +60°C (0° to +140°F) |
| Remote Display | 5602DBP | 0° to 50°C (32° to 122°F) |

| | |
|---|---|
| Flame Failure Response | 3 seconds ±0.5 seconds. |
| Trial For Ignition (TFI) | *No Purge & Purge Models:*<br>Series 5602 & 5603: 5 or 10 seconds selectable.<br>Series 5605: 10 or 15 seconds selectable.<br>Modulating Model: 5 or 10 seconds selectable |
| Pilot Interrupt (if selected) | 10 seconds. |
| Purge Time | Selectable from 0-225 seconds in 15 second increments. |

**Output Ratings for 120 VAC *(maximum total connected load not to exceed 15 amps)**

| Function | Terminals | UL, CSA Inductive Load | Relay Contact Rating Resistive Load |
|---|---|---|---|
| Gas Valve | 3, 5 | 175VA, 1/10 HP | 10 amps |
| Ignition | 4 | 375 VA | 10 amps |
| Motor or Contactor | 8 | 470 VA, 1/2 HP | 16 amps |
| Control Signal | A, 10, 11, 12, 13 | 175VA | 10 amps |

**Output Ratings for 240 VAC *(maximum total connected load not to exceed 15 amps)**

| Function | Terminals | Relay Contact Rating Resistive Load |
|---|---|---|
| Valves, Ignition | 3, 4, 5, | 5 amps |
| Motors or Contactor | 8 | 16 amps |
| Alarm | A | 5 amps |
| Control | 10, 11, 12, 13 | 5 amps |

*Resistive loads have inrush currents approximately the same as steady state operation. The inductive inrush current must be less than 10 timesthe rating. The inrush current must not be applied more than once every 15 seconds.

*(continued onto next page)*

## Specifications *(continued)*

| Parameter | Description |
|---|---|
| Approvals<br>(See chart below.) | • *No Purge & Purge Models:*<br>Series 5602: UL listed, CSA certified, FM approved and GE GAP acceptable.<br>Series 5603: FM approved.<br>Series 5605: UL listed, FM approved and GE GAP acceptable.<br>• *Modulating Models:*<br>Series 5602: UL recognized (must be mounted in panel), CSA certified, FM approved and GE GAP acceptable.<br>Series 5603: FM Approved. |
| Shipping Weight | • 1.4 kilograms (3 lbs.) for all Veri-Flame models.<br>• 0.9 kilograms (2 lbs.) for Models 5602-10 & 5602-10-1 bases.<br>• 1.2 kilograms (2.6 lbs.) for Model 5602-40 base. |

**Approval Information**

**UL Listed,** File MP1537

**UL Recognized,** File MP1537

**CSA Certified,** File 007989

**FM Approved,** File 3013812

## Dimensions

### Veri-Flame Unit/All Models

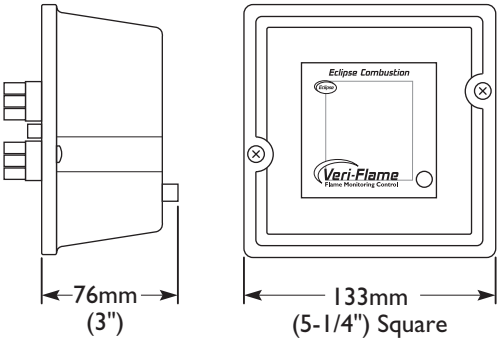


### Veri-Flame Bases/Purge & No Purge Models

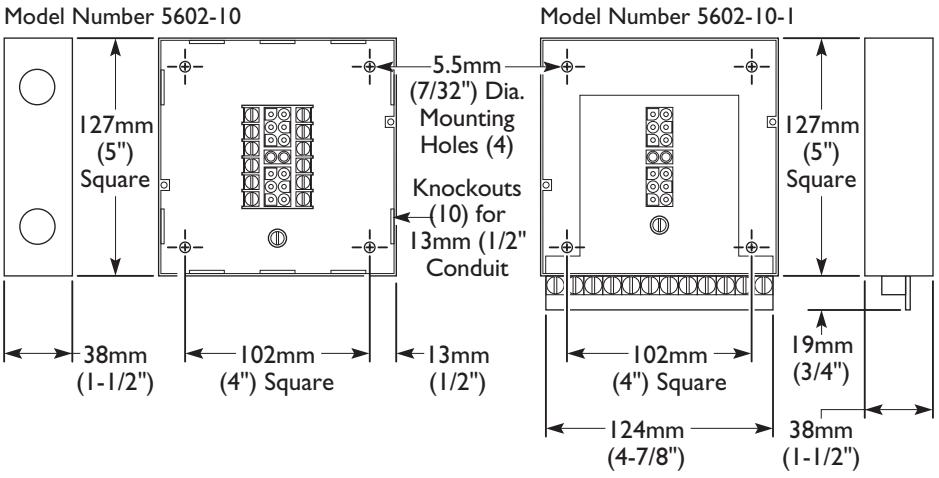

## Dimensions *(continued)*

### Veri-Flame/Modulating Model with Base Model Number 5602-40

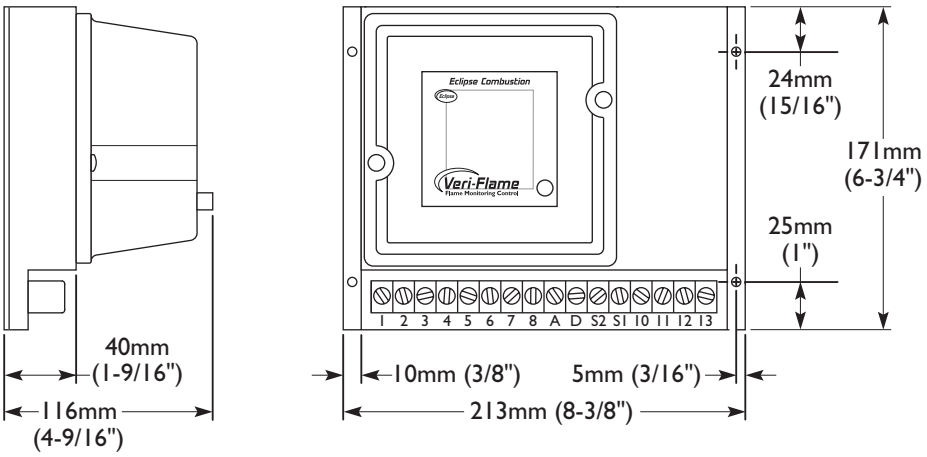


### Remote Display Model Number 5602-DBP

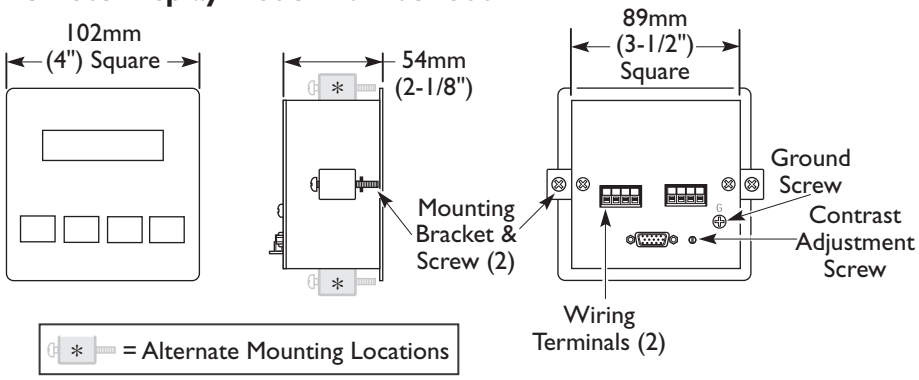

# DIP Switch Selection

# 3

## Introduction

This section details the location, selection and description of the Veri-Flame DIP switches, which allow for sequence and timing functions as well as system configuration.

*Caution*
*To avoid electric shock, shut off the power supply when installing or removing any control device. Flame monitoring systems must be installed by a qualified, licensed technician.*

### DIP Switch Location

All of the DIP switches are located in the back of each Veri-Flame unit (see Figure 3.1 on page 13, or the photograph on page 8).

### DIP Switch Access

To gain access to the DIP switches, the Veri-Flame must be separated from the back box (for visual reference, please refer to "Dimensions" on page 10). This separation will expose the DIP switches on the back of the Veri-Flame unit.

### No Purge DIP Switch Settings

No Purge models of the Veri-Flame only use three of the eight DIP switches, as shown in the labels in Figure 3.2 on page 13. They are as follows:

*SW1*: Recycling mode selection (On = Recycling; Off = Non-recycling)

*SW2*: Pilot selection (On=Intermittent, where pilot remains on during burner cycle; Off = Interrupted, where pilot valve closes after main burner is established).

*SW3*: Trial-for-ignition (TFI) range selection (**For 5602/5603 units:** On = 10 seconds; Off = 5 seconds. **For 5605 units**: On = 10 seconds; Off = 15 seconds).

### Modulation & Purge DIP Switch Settings

Modulation and purge models of the Veri-Flame use all of the eight DIP switches, as illustrated in Figure 3.2 on page 13. They are as follows:

*SW1*: Recycling mode selection (On = Recycling; Off = Non-recycling)

*SW2*: Pilot selection (On=Intermittent, where pilot remains on during burner cycle; Off = Interrupted, where pilot valve closes after main burner is established).

*SW3*: Trial-for-ignition (TFI) range selection (**For 5602/5603 units**: On=10 seconds; Off = 5 seconds. **For 5605 units**: On = 10 seconds; Off = 15 seconds).

*SW4 through 7*: Purge time selection. Total purge time is the sum of each switch selected. If all are set off, the trial for ignition starts when the air switch input comes on.

*SW8:* Post purge selection. (On=15 second post purge).

## *Figure 3.1* DIP Switch Location

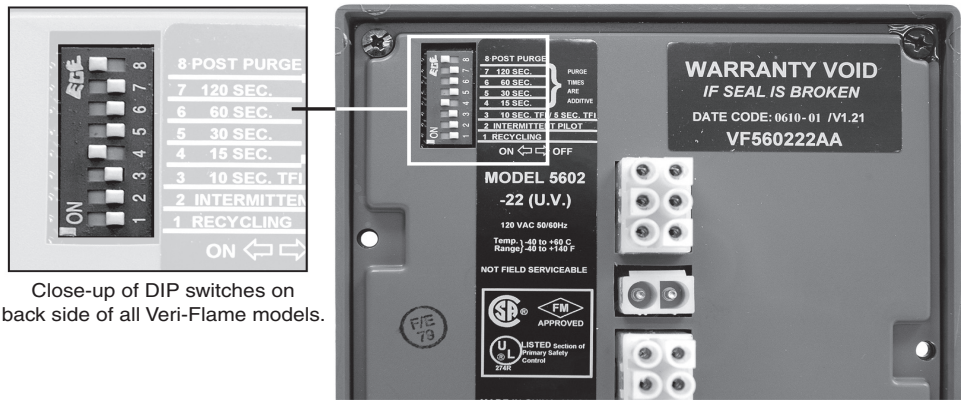


Close-up of DIP switches on back side of all Veri-Flame models.

## *Figure 3.2* DIP Switch Labels with Selections

### No Purge Models

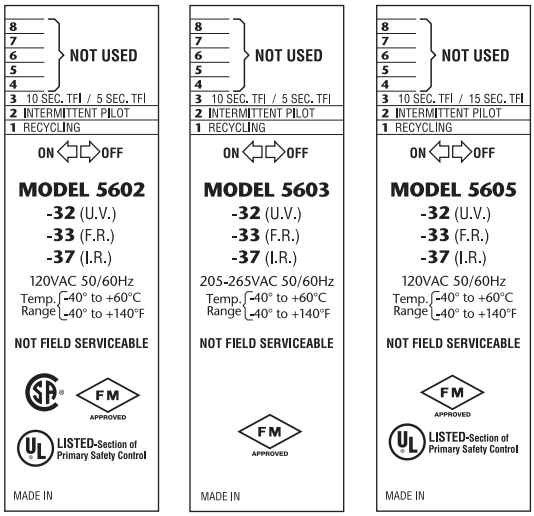


### Purge Models

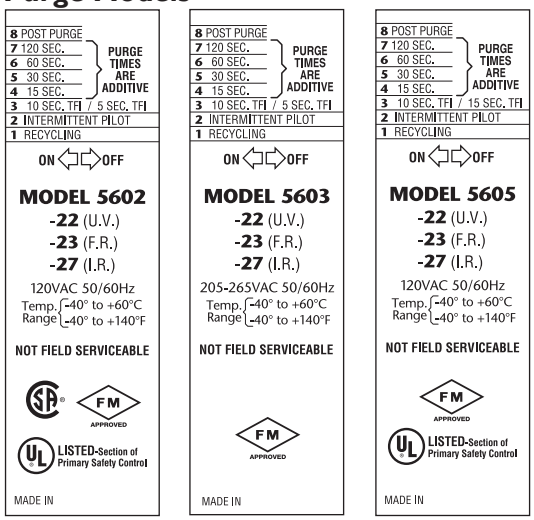


### Modulation Models

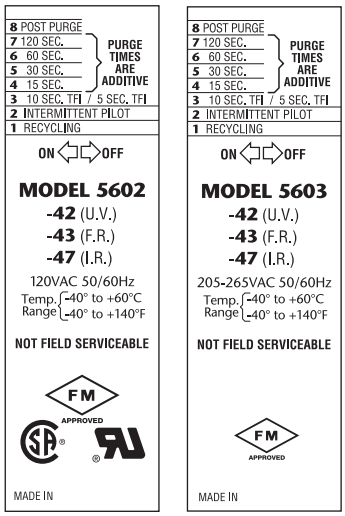

# Function Summary

4

## Introduction

This section describes the features of the Veri-Flame. It is divided into three categories: Standard features, Optional features and the LED Indicator Lights on the front cover. Refer to Figure 5.5 for sequence diagrams.

## Standard features

The following function features are standard on the Veri-Flame models as noted:

### Interlocks and Limit Switch Input (Terminal 7)

This input is considered the normal operation control or run input to the Veri-Flame system. Interlocks are generally pressure or temperature switches which, when activated, start the burner. Limit switches are generally pressure, temperature and other switches which, when activated, stop the burner. The interlocks and limit switches are wired in series. A break in this circuit will shut the burner down, but will not produce an alarm.

### Combustion Air Switch Input (Terminal 6)

**For purge and modulation models:** This input is for monitoring the combustion air switch separately from other interlocks and limits. The Veri-Flame checks the air flow switch input is open before start-up, closed during operation, and open again at burner shutdown, thus preventing operation with an air switch that is defective, maladjusted or jumped. This input has about a 2 second delay to filter out and ignore a momentary interruption.

The input will be proven open before start-up and after shutdown. If the input is improperly powered before the fan output is energized, the system error light will blink. The input must de-energize within 30 seconds or the Veri-Flame will lockout.

After the fan output has energized, the air switch input must be made within 10 seconds. If not proven, then the system will lockout, the alarm output and the air failure light will come on. However, if the unit has the optional air switch input hold feature, the sequence is held indefinitely without causing a lockout. When the air switch input is made, then the sequence continues.

If the air switch opens during the main firing cycle, the system will either lockout or recycle, depending on the DIP switch recycle selection.

### Main Fuel Valve Closed Switch (Terminal V)

**Purge and No-Purge models:** the Veri-Flame can be interlocked with the main valve closed switch. This feature checks the switch position before start-up and after shutdown to insure proper valve operation when the jumper on the base is cut.

### Low Fire Start

**For modulation models:** when wired, the system checks for the low fire start position prior to light-off.

### Main Fuel Valve Closed/ High Fire Purge Check (Terminal D)

**For modulation models:** This feature is enabled when the jumper on the base is cut. The system checks that the high fire position switch and the main valve closed switch are both made at the end of the high fire purge.

### Recycle Mode

**For all models:** when selected, the Veri-Flame will restart the sequence after flame or air failure. The recycle mode allows the system to re-initiate the start-up sequence automatically **provided the main burner has been operating for at least 35 seconds.** If the pilot flame fails to light during recycling, the system will lock out and annunciate a pilot flame fail. If the re-cycle is successful and the main burner is operational for at least 35 seconds, the system is ready for another recycle. At no time will the system recycle in the event of pilot flame fail.

### Pilot Test Mode



**Test Mode (Button In)** **Run Mode (Button Out)**

**For all models:** this mode is entered by depressing the TEST/RESET button on the front cover. In the pilot test mode, the Veri-Flame will hold the sequence once the pilot flame is established (i.e., the main valve is not energized). When in the pilot test mode, the green "Interlocks Closed" light **blinks**.

To exit the pilot test mode, push the TEST/RESET button again and the Veri-Flame will exit the pilot test mode (the green "Interlocks Closed" light **stops blinking but remains lit**) and you must restart the sequence.

### Interrupted or Intermittent Pilot

**For all models:** pilot mode is selected using the DIP switch SW2. An interrupted pilot shuts off 10 seconds after the main valve opens. An intermittent pilot continues during the entire main flame firing cycle.

### Post Purge

**For purge and modulation models:** post purge is enabled by DIP switch SW8. A post purge maintains the combustion air fan output for 15 seconds after the interlocks and limit switch input have opened.

### Spark, Pilot Flame & Main Flame Separation

**For all models:** during the trial for ignition period (TFI), the pilot valve and ignition coil remains energized. If a flame signal is present at the end of the TFI, the pilot output remains on and the ignition coil is de-energized. After a five second delay to prove the pilot flame, the main gas valve is energized.

### System Errors & Lockout Conditions

A ***system error*** (illuminated by the red "System Error" LED on the front cover) prevents gas ignition. The unit will continue its sequence after the error is cleared. A ***lockout condition*** energizes the alarm output and de-energizes the gas valve and ignition outputs. The unit must be reset to clear the alarm and start the sequence. To reset, the button must be pressed twice so that the button is in the out position.

The following system errors result in immediate lockout conditions:

1) Wiring error which puts external voltage on the output terminals **(for all models)**.
2) Welded internal contacts or other malfunctions in the Veri-Flame **(for all models)**.
3) Main fuel valve **(for all models)**–open after cycle shutdown or before start-up. The system error light blinks twice and then remains on. The fan output terminal 8 will energize.

## System Errors & Lockout Conditions (Continued)

4) Low fire fail **(for modulating model)**–low fire switch open prior to trial for ignition.
5) High fire fail **(for modulating model)**–high fire switch is not closed at the end of high fire purge.

The following situations will result in a lockout condition:

6) Air failure **(for purge and modulation models)** – loss of combustion air anytime during the operational cycle. The Air Failure LED will be on for this condition. (See "Recycle Mode" on page 14)
7) Pilot flame fail **(for all models)** loss of flame during the trial for pilot ignition period. The Flame Failure LED will be on for this condition.
8) Main flame fail **(for all models)** loss of flame during the main burner trial for ignition or run period (recycling not selected). The Flame Failure LED will be on for this condition.

The following result in lockout conditions after 30 seconds, the system error light blinks about 14 times and then remains on:

9) If a flame is detected out of sequence, which may be caused by:
   a) a faulty scanner **(for all models)**;
   b) electrical interference on the sensor wiring **(for all models)**;
   c) a flame exists in the burner or in the line of sight of a scanner, due to a gas leak, product fire or other condition **(for all models)**.
10) Air flow switch closed before start-up **(for purge and modulation models)**.

## High to Low Fire Purge Modulation Capability with High to Low Fire Position Switch Interlocks

**For modulation models:** the modulation feature incorporates a high fire purge time and a low fire purge time into the purge sequence. This feature allows the Veri-Flame to sequence internal dry contacts which can be used by the customer requiring a high fire purge of the combustion chamber before ignition.

The high fire and low fire purge times are selectable by means of DIP switches (see Section 3, "DIP Switch Settings" on page 12):

SW4 ..... 15 seconds  SW6.....60 seconds
SW5 ..... 30 seconds  SW7..... 120 seconds

The selected times are additive and apply to both the high fire and low fire purge times (that is, high and low fire times are always identical).

The modulation terminals will sequence as follows:

| Sequence Step | Internal Contact Connections | |
|---|---|---|
| Power Off | Terminal 10 (Common) | Terminal 12 (Low Fire) |
| Power On, Limits Open | Terminal 10 (Common) | Terminal 12 (Low Fire) |
| Purge To High Fire | Terminal 10 (Common) | Terminal 13 (High Fire) |
| Purge To Low Fire | Terminal 10 (Common) | Terminal 12 (Low Fire) |
| Automatic Modulation | Terminal 10 (Common) | Terminal 11 (Auto) |
| Alarm and Lockout | Terminal 10 (Common) | Terminal 12 (Low Fire) |

The purge to high fire sequence does not start until the air switch input is on. The Automatic step occurs when the burners are operating and allows the burner firing rate to be controlled by an automatic temperature controller.

## Optional features

The following features are available on select models, or when optional equipment is purchased.

**Air Switch Input Hold**

**For purge/modulation models:** holds the sequence indefinitely until air switch input is confirmed without affecting the air failure function and causing a lockout.

**Remote Display & Power Supply**

The model 5602DBP operates on 120VAC and has a keypad for reset function. The display is door panel mounted and features a liquid crystal display in a ¼ DIN housing. The unit connects to the Veri-Flame by a cable to the flame signal test jack, and receives a serial communication on each sequence state change. The display incorporates the following functions:

1) Provides status messages for the Veri-Flame sequence (see section 9).
2) Indicates lockout conditions when they occur, as well as the amount of time into the sequence when the lockout occurred (see section 9).
3) Provides continuous monitoring of the burner's flame signal strength and run time during main burner operation.

**Manual Reset on Power Outage**

This optional feature requires a reset on initial application of power or after an interuption of power. The system error light blinks rapidly (about 4 times per second) and a remote display will show "PUSH RESET TO START". The reset button must be pressed in and out to start. Do not order this option if the Veri-Flame is mounted inside an enclosure.

## Status Lights & Push-button

All of the status lights and the TEST/RESET push-button are located on the front cover of the Veri-Flame. This section describes their respective functions.

**Interlocks Closed**

**For all models:** this green LED illuminates when the operation limits are made. These limits are wired in series to terminal 7. This input becomes energized to begin the burner sequence. When in the test mode, this LED blinks (see "Pilot Test Mode" on page 15).

**Air Failure**

**For purge and modulation models:** this red LED illuminates whenever combustion air is lost during the operational cycle of the Veri-Flame.

**System Error**

**For all models:** this red LED illuminates when a system error is detected (see "System Errors & Lockout Conditions" on pages 15-16).

**Flame Failure**

**For all models:** this red LED illuminates when a pilot or main flame fails.

**Low Fire**

**For modulation models:** this yellow LED illuminates during the low fire period of the purge cycle.

**High Fire**

**For modulation models:** this red LED illuminates during the high fire period of the purge cycle.

**Auto**

**For modulation models:** this green LED illuminates during the automatic period which occurs 20 seconds after the main valve is energized.

**Test/Reset**

**For all models:** this push-button is used to activate the pilot test mode or to reset the Veri-Flame unit.

**Flame Signal**

**For all models:** this red LED is located behind the signal test port and illuminates when a flame signal is present.

# System Installation

# 5

## Introduction

In this section, the necessary procedures are detailed to integrate a Veri-Flame into a burner system; Figures 5.1 and 5.2 illustrate the various terminal strips mentioned.

*Note:*
*Shut off the power supply before the Veri-Flame is removed or replaced from the base.*

*Caution:*
*Installation and maintenance must conform with the National Electrical Code and all other national and local codes and authorities having jurisdiction. Flame monitoring systems must be installed by a qualified, licensed technician.*

### Interlocks and Limit Switch Input

Wire external interlock, control, and limit switches in series to this input. Guard against induced voltage levels to wiring connected to this input. In some extreme wiring runs, reduction of induced voltages may require a load (relay or light) connected to terminal 7 to avoid system error lockouts. This input is the power source for the valve and ignition output terminals. Be sure all switches wired to this input can handle the current required by the total of all loads connected to terminals 3, 4, and 5.

### Combustion Air Switch Input

**For purge and modulation models:** Wire any switches and contacts in series to this terminal for proving air flow function and relating to the air failure light. Power must not be immediately present at terminal 6 when power is first applied to terminals 1 or 7.

If this terminal is not used, place a jumper between the combustion blower output (terminal 8) and the air switch input (terminal 6).

If the combustion air blower is controlled outside of the Veri-Flame system, then a three way solenoid valve must be connected between the air switch port and the blower sensing port. The valve de-energized state should vent the switch to ambient pressure. The energized state then connects the air switch to the blower sensing port. Power the valve from the blower ouput terminal 8. If accepted by local codes, the air switch could be wired between the combustion blower output and the air switch input. Connecting the air switch in this manner will satisfy the open contact (air short) check on the switch.

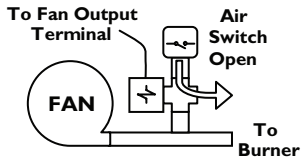

3-Way Solenoid Valve De-energized

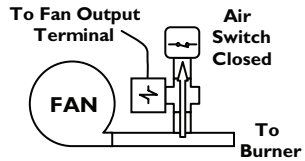

3-Way Solenoid Valve Energized

## Ignition Wiring

Route ignition wiring a sufficient distance from all sensors and other low voltage wiring to avoid electrical interference, which may cause erratic operation of the Veri-Flame system. Keep the high voltage wire run from the ignition transformer as short as possible. The best condition is to mount the ignition transformer close to the burner and keep a low impedance path from the burner ground to the case of the transformer. Make sure the high voltage lead and ground return paths do not create a loop antenna around the Veri-Flame and sensor wiring.

## Low Fire Input

**For modulation models:** it is possible to wire the system for checking low fire start position prior to pilot ignition. To use this feature, the low fire start switch must be connected between terminal 3 and the pilot valve (see Figure 5.2). On direct spark burners, a by-pass contact must be wired around the low fire switch, see relay and contact CR in Figure 5.3.

## Main Valve Closed Switch

The system can be wired to check for the main valve closed switch on the main gas valve prior to start-up and after the end of the burner cycle.

**For purge and no purge models:** the main valve closed switch must be connected to Terminal V and **the jumper in the base must be cut** (see Figure 5.4 on page 22).

**For modulation models:** the main valve closed switch must be wired in series between the air flow switch and the high purge damper switch (see Figure 5.1 on page 20). **To use this feature, the jumper in the base must be cut.**

## High Purge Input

**For modulation models:** the system can be wired to check for high purge position during the high fire purge portion of the sequence. **To use this feature, the red jumper in the base must be cut** and the high purge position switch must be connected from terminal 6 to D. If this feature is not used, the jumper in the base remains intact or a jumper must be installed between terminals 1 and D. Please note that the yellow jumper on the base has no effect whether cut or intact.

## Remote Reset

This feature permits remote mounting of a switch to reset the Veri-Flame. To use this feature, a normally closed remote reset switch must be wired so power is interrupted to terminal 1. When it is depressed or actuated, the connection to terminal 1 is momentarily interrupted and resets the Veri-Flame.

## Remote Display & Power Supply

Wire the display according to figure 5.3. Mount through a ¼ DIN cutout using the two supplied brackets in either the top and bottom or the side slots. Locate the display and wiring to minimize electrical interference. Applying and disconnecting the display power supply should coincide with power to terminal 1 of the Veri-Flame. Use the appropriate cable (Eclipse part #20318) to connect to the test jack and to the S2 terminal of the Veri-Flame wiring base. Do not attempt to parallel the test jack signal to other devices when using a remote display. The LCD display contrast can be adjusted on the back with a small blade screwdriver.



*Note:*
*power for terminal 7 of the VeriFlame should not flow through the R1-R2 contact when load currents exceed 5 amps.*

## *Figure 5.1* No Purge and Purge Wiring Diagrams

**No Purge Models**

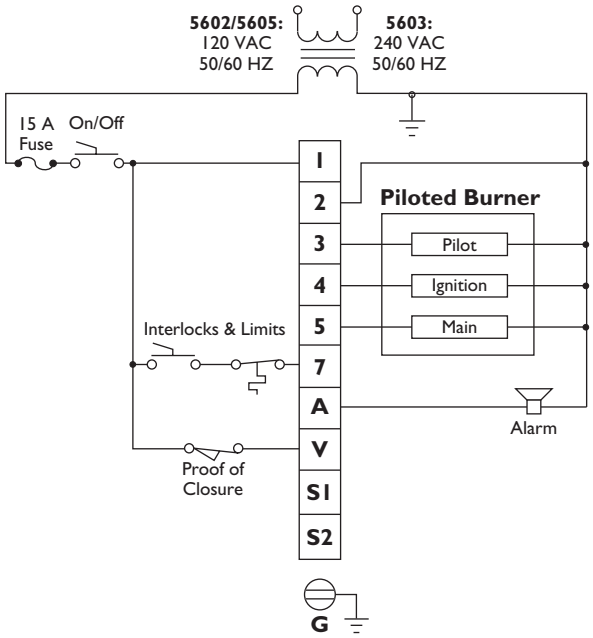


**Purge Models**

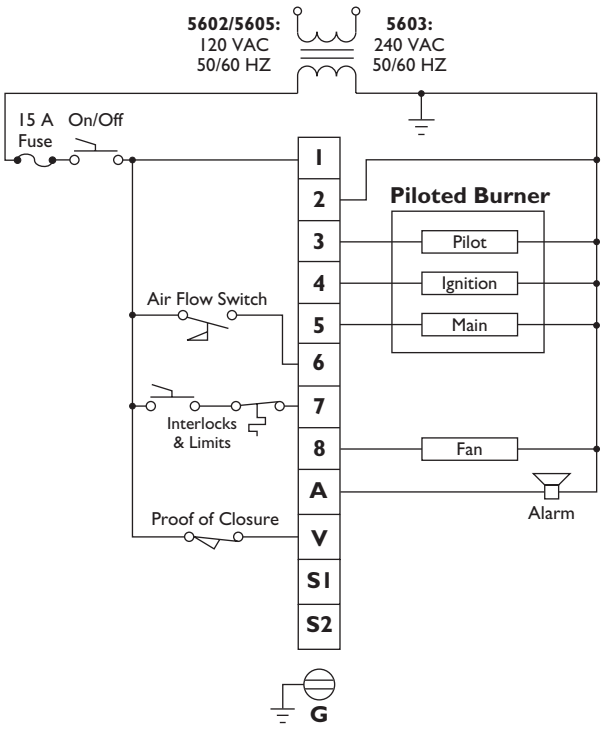


## *Figure 5.2* Modulation Wiring Diagram

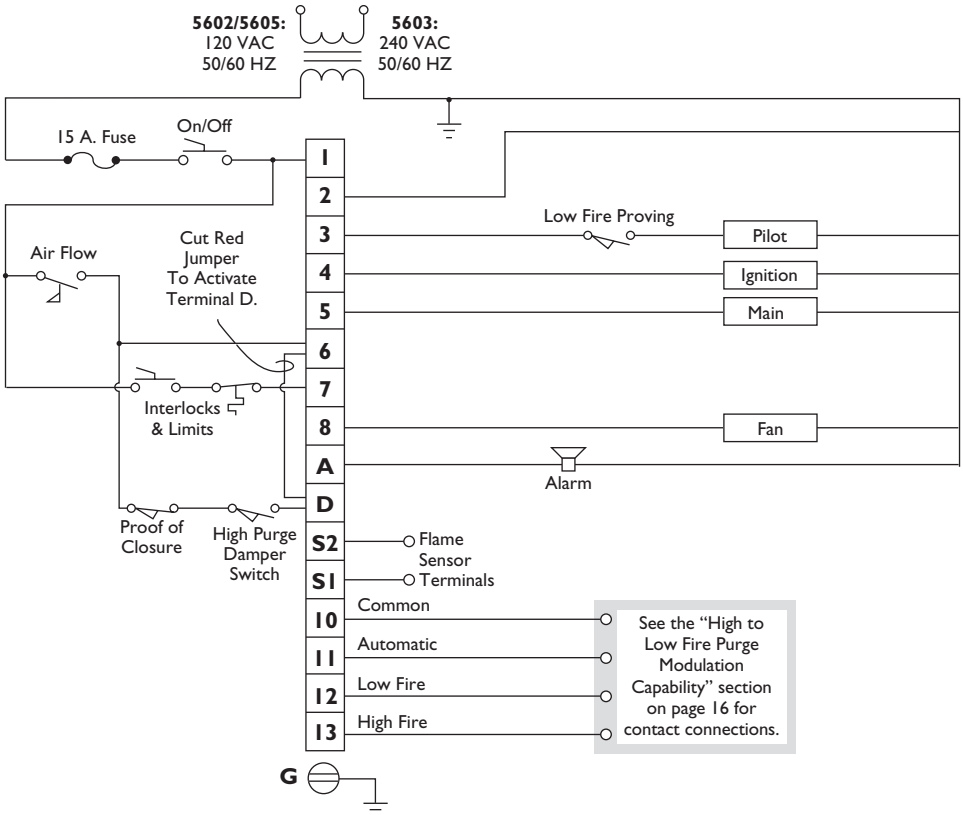

## *Figure 5.3* Typical Connections For All Models

**Self Check U.V. 5602-91**
**(Requires 5602-91-7 cable)**

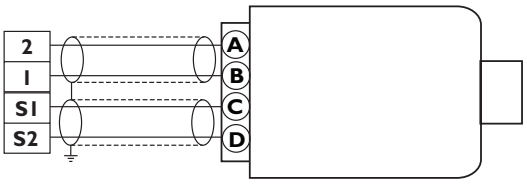


**Model 5602 DBP**
**120 VAC Remote Display**

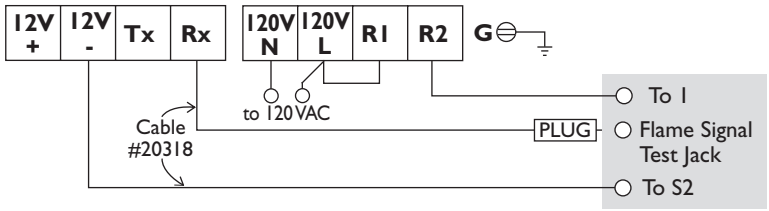


Veri-Flame

**Self-Check U.V. 5602-91**
**(Requires 5602-91-7 cable)**
**for 240 VAC Veri-Flame**

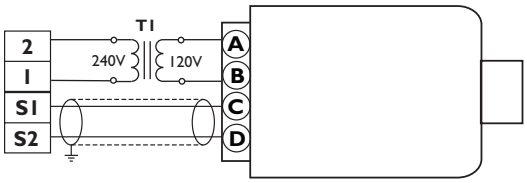


[T1] Third party transformer required. Must be at least 25 VA.

**Solid State U.V./I.R.**

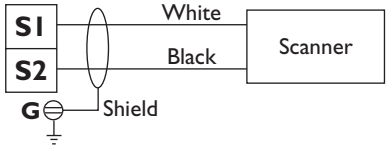


**Flame Rod**

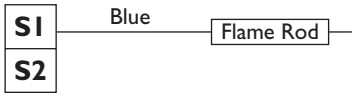


**U.V.**

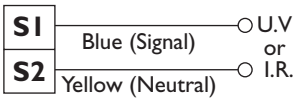


**No Purge & Purge**
**Direct Spark**

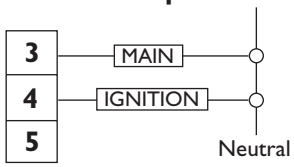


*Note: Intermittent pilot must be selected, DIP-SW2 = ON*

**Modulation**
**Direct Spark with**
**Low Fire Start**

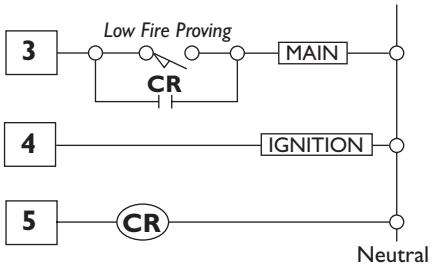


*Note: Intermittent pilot must be selected, DIP-SW2 = ON*
*CR is a control relay used to bypass the low fire switch after the burner is lit.*

*Notes for Figures 5.1, 5.2 & 5.3:*

1. *Ground, shielding and conduit must not be connected to terminal S2.*
2. *Control circuit wires must meet 90°C (194°F) specification minimum and must be No. 16 AWG or larger and in accordance with all applicable codes.*
3. *Flame sensor wires must be individually run in their own separate conduit; flame sensor wires CANNOT be run together in a common conduit or wireway (See Section 6).*
4. *Flame signal should read between 4 and 10 VDC with a digital volt meter. Drop off is approximately 4.0 VDC. Positive test jack point is on the cover marked "Flame Signal" with negative point being the S2 or ground.*
5. *Purge time, TFI, intermittent/interrupted pilot, and recycle/non-recycle selections are made with a DIP switch located on the rear plate of the control unit.*
6. *Neutral must be grounded.*

*Figure 5.4* **Purge and No Purge Bases**

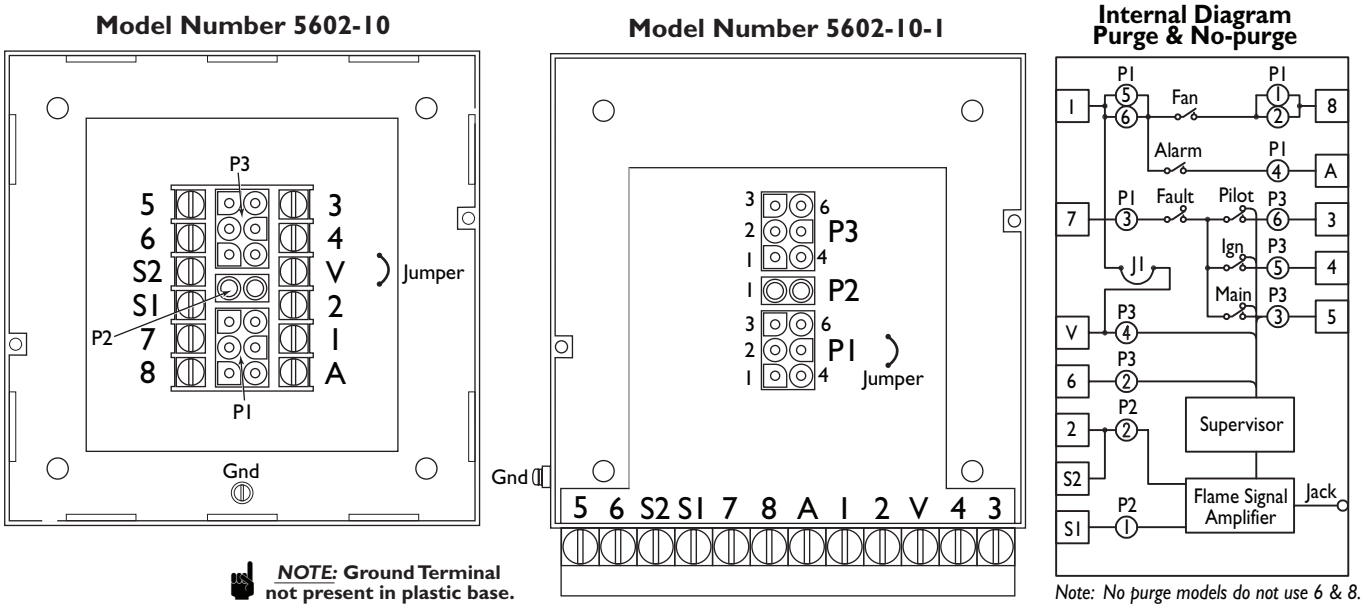


**Modulating Base**

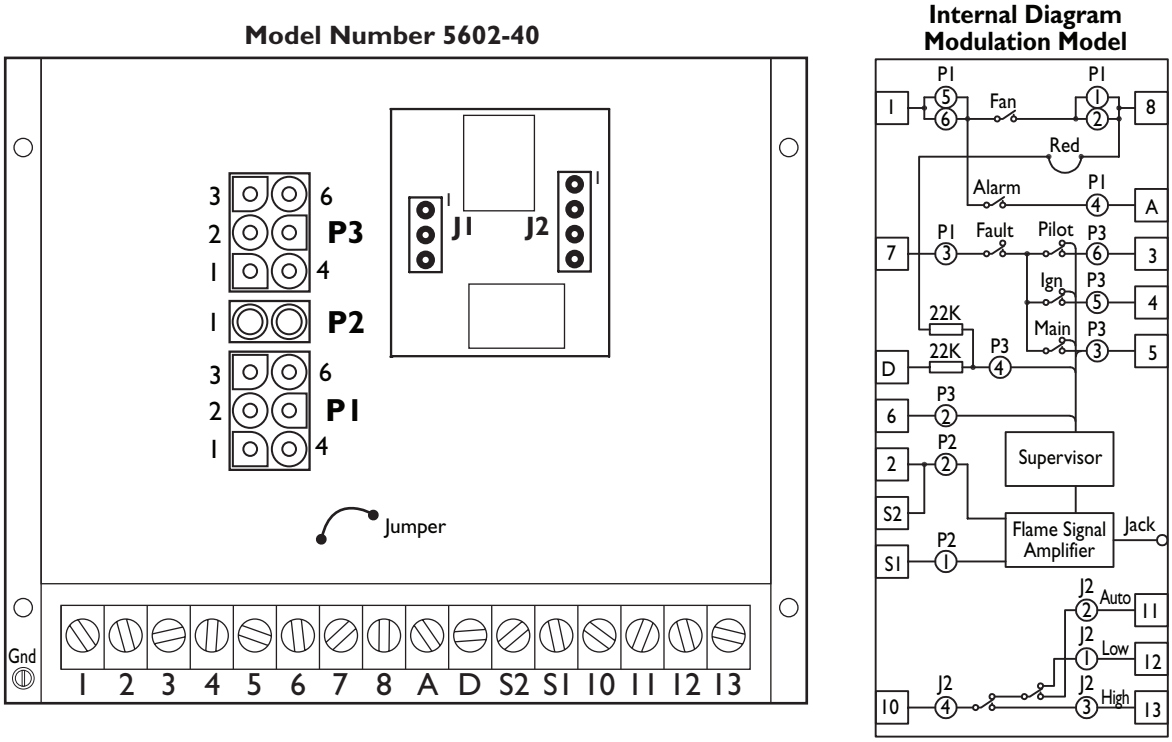

## *Figure 5.5* Sequence Diagrams

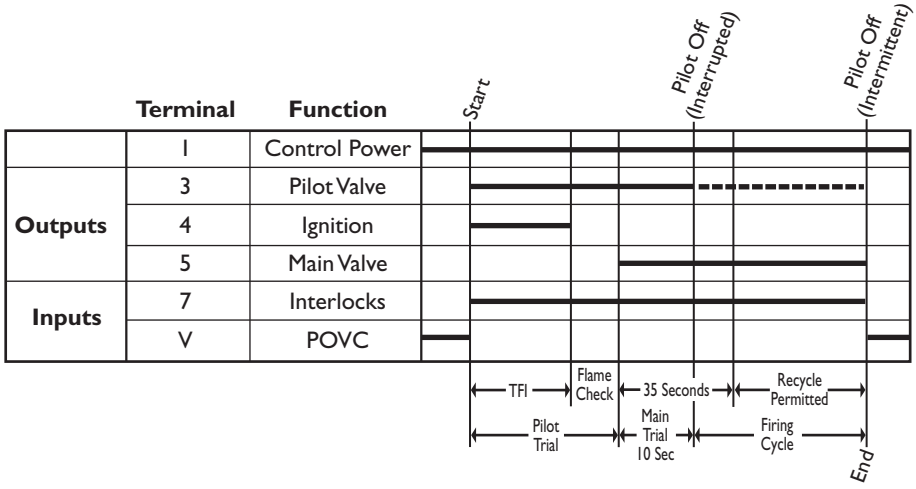


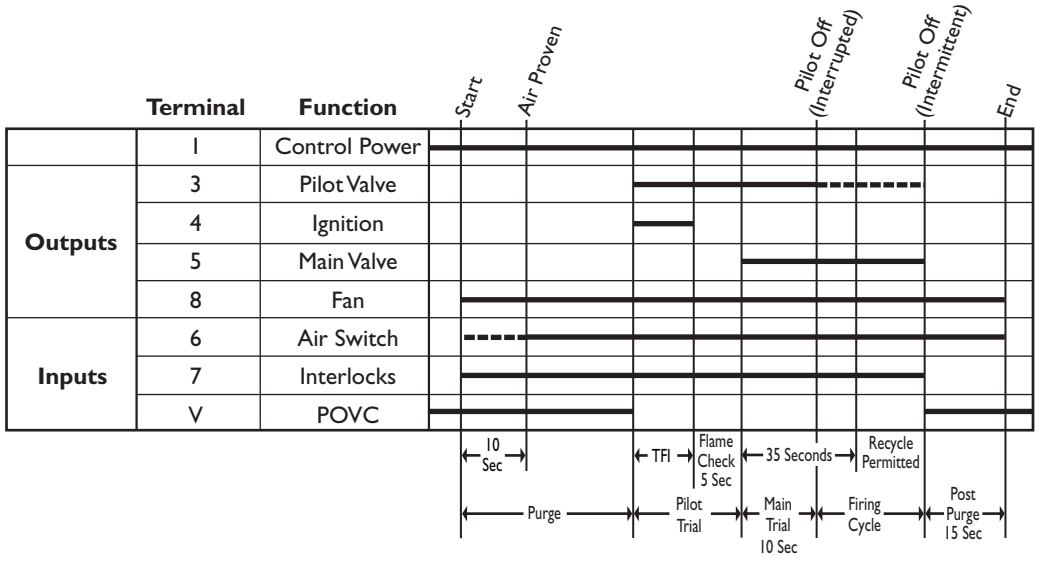


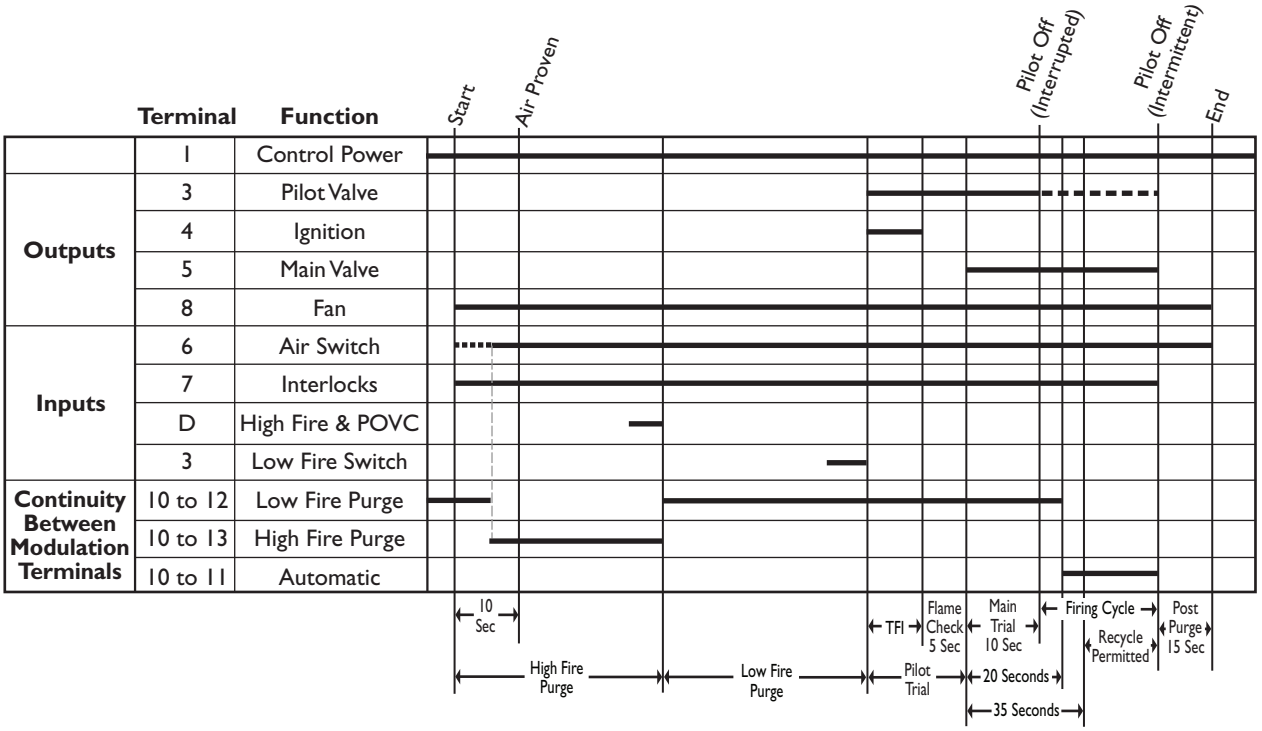

# Sensor Installation

6

## Introduction

This section describes the proper wiring, installation and sighting considerations for all sensors that can be used with a Veri-Flame.



**Warning**

**Incorrect sensor installation may cause the sensor to generate a false flame signal, possibly resulting in the collection of unburned fuel in the combustion chamber. This unburned fuel creates the potential for explosions which can result in injuries, death and property damage. Be certain that the flame sensor detects acceptable pilot and main flames only.**

### Sensor Wiring

Route sensor wiring a sufficient distance from ignition and other high voltage or high current wiring to avoid electrical interference. Interference from ground currents, nearby conductors, radio-frequency emitters (wireless divices), and inverter drives can induce false flame signals. Shielded cables can help reduce interference with the shield connected to ground at the control end only. The wire type and its capacitance (picofarads or microfarads) to ground may cause low signal problems, so a grounded shield may decrease the signal due to the cable's internal capacitance. Multiple U.V. tube-type sensor leads run together without shielding may interfere or "cross talk", so the shield or flexible armor must be grounded to prevent this situation. For flame rod sensor runs approximately 100 feet (30 meters) or greater, use Eclipse part number 21741 coax cable. To achieve the maximum wiring distance, the shield should not be grounded (keep in mind that an ungrounded shield provides less protection against electrical interference).



*Note:*

*Unshielded sensor wiring must not be run in common with other wires; it must be run in separate conduit. Multiple unshielded flame sensor wiring must not be run together for long lengths in a common conduit or wireway. Use #14 to #18 AWG wire suitable for 90°C (194°F) and 600 volt insulation, or a better grade if required by the application. Multiple shielded flame sensor cables can be run in a common conduit.*

### Flame Rods

Flame rods should be used only on gas burners. They accumulate soot from oil burners, causing nuisance shutdowns and unsafe operating conditions.

See the burner manufacturer's literature for flame rod mounting location. When installing flame rods, please consider the following:

1) Keep the flame rod as short as possible and at least 13 mm (1/2") away from any refractory.
2) Position the rod into the side of both the pilot and main flames, preferably at a descending angle to minimize drooping of the flame rod against burner parts, as shown in Figure 6.1. Flame rod position must adequately detect the pilot flame at all burner draft conditions. Extend the rod 13 mm (1/2") into nonluminous flames, such as blue flames from burning an air/gas mixture. For partially luminous flames, such as atmospheric air/gas mixtures, place the rod at the edge of the flame.
3) Provide a burner/flame grounding area that is at least four times greater than the flame rod area contacting the flame. The flame rod/burner ground ratio and position of the rod in the flame may need adjustment to yield maximum flame signal strength.
4) Ignition interference from the spark plug may increase or decrease the flame signal strength. Reversing the ignition transformer primary leads may reduce this effect. Changing the spark gap or adding grounding area between the flame rod and spark plug may eliminate the interference.

***Figure 6.1 Flame Rod Position***

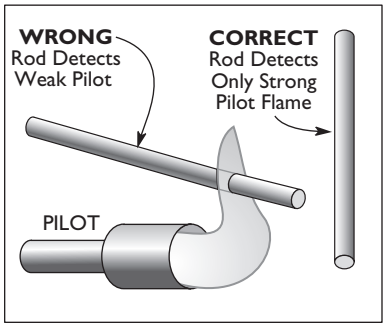


## Scanners

**Warning**
**Use only Eclipse scanner models as listed in the Illustrated Parts List at the end of this document.**

When installing scanners, please consider the following:

1) Position the scanner within 457 mm (18") of the flame. Consult factory for longer distances.
2) Bushing threads are 1/2 inch F.N.P.T. for all scanner models except 5602-91 which has 1 inch F.N.P.T. bushing threads.
3) The ambient temperature limits of each scanner varies; check the literature for the specific scanner model. For higher temperatures, use Eclipse heat block seal 23HBS for ½" N.P.T. scanners and if necessary, add cooling purge air.
4) An optional magnifying lens may also be used to increase the flame signal strength in difficult sighting situations.

## Scanner Sighting Considerations

Aim scanners at the third of the flame closest to the burner nozzle, as shown in Figure 6.2 (oil flames typically have less UV radiation in the outer flame). The scanner should view the intersection of the pilot and main flames. When sighting scanners, please consider the following:

1) If possible, sight the scanner away from the ignition spark. Sighting the spark or its reflections from burner internals may lead to a misdiagnosis of shut-downs during burner ignition. If necessary, use a scanner orifice to reduce spark pickup.
2) Do not allow the scanner to detect a pilot flame that is too small to ignite the main burner.
3) Perform a minimum pilot test when installing or adjusting any pilot or main burner system; see "Minimum Pilot Test" on page 26.
4) Solid State UV/IR scanner model 5600-92SC may better detect oil flames. When used, aim the scanner at the outer oil flame for flicker detection.

***Figure 6.2 U.V. Scanner Sighting***

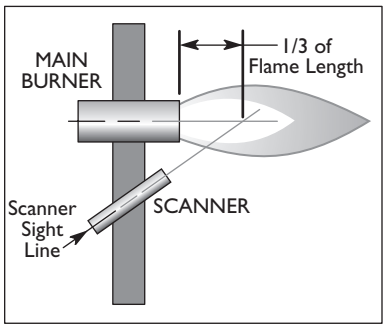

# Test Procedures

7

## Introduction

This section describes the test procedures that must be performed after installation to insure that the Veri-Flame is operating properly; these procedures are mandatory.

### Flame Signal Strength

Insert the positive probe of a 0-15 VDC, digital volt meter into the test point on the front cover of the Veri-Flame; connect the negative probe to S2 or ground. A good flame signal strength will read between 6 and 11 VDC; anything below 4 VDC is inadequate. Also, the red LED inside the test point illuminates when a flame signal is indicated.

### Minimum Pilot Test

Run the following test procedures to ensure that the sensor will not detect a pilot flame too small to reliably light the main flame:

1) Manually shut off the fuel supply to the burner, but not to the pilot.
2) Start the system normally.
3) To enter the pilot test mode, depress the test/reset button located in the lower right corner on the front cover.
4) The control will hold the operating sequence at the pilot flame step. Measure signal strength as described above.
5) Reduce pilot fuel until the flame relay drops out. Increase pilot fuel until the flame signal is greater than 4 VDC, and flame relay just manages to pull in. This is the minimum pilot. If you don't think this flame will be able to safely light the main burner, realign the sensor so that it requires a larger pilot flame and repeat steps 2 through 5.
6) Push the test/reset button located in the lower right corner on the front cover to exit the test mode (reset) and begin the normal start-up sequence again.
7) When the sequence reaches the main flame trial for ignition, smoothly restore the fuel supply to the burner. If the main burner does not light within five seconds, immediately shut off the burner supply to shut down the system. Realign the sensor so that it requires a larger pilot flame. Repeat steps 1 through 6 until the main burner lights off smoothly and reliably.

**Pilot Flame Failure Test**

1) Manually shut off the fuel supply to the pilot and the main burner.
2) Place system in pilot test mode (please refer to page 15).
3) Start the system normally. The controller should lock out*; if it doesn't, then the controller is detecting a false flame signal (see Section 6). Find the problem and correct it before resuming normal operation.

**Main Flame Failure Test**
*(For Interrupted Pilot Systems)*

1) Manually shut off the fuel supply to the main burner but not to the pilot.
2) Start the system normally. This should ignite the pilot and lock out* after pilot interruption. If the system does not lock out, the controller is detecting a false flame signal (see Section 6). Find the problem and correct it before resuming normal operation.

**Spark Sighting Test**

1) Manually shut off the fuel supply to the pilot and the main burner.
2) Start the system normally.
3) Measure the flame signal as described in "Flame Signal Strength" in this section.
4) If a flame signal greater than 4VDC is measured for more than three seconds during the trial for ignition, then the sensor is picking up a signal from the spark plug; see "Sensor Wiring" on page 24. It is not necessary to correct a spark sighting condition for a Veri-Flame when the ignition transformer is connected to terminal 4.

**Limits & Interlock Tests**

Periodically check all interlock and limit switches by manually tripping them during burner operation to make sure they cause the system to shut down.



**Warning**

**Never operate a system that is improperly adjusted or has faulty interlocks or limit switches. Always replace faulty equip ment with new equipment before resuming operation. Oper ating a system with defective safety equipment can cause ex plosions, injuries, and property damage.**

* Indicated by the illuminated red "Flame Failure" LED on the Veri-Flame front cover.

# Maintenance & Troubleshoot-

# 8

## Introduction

This section is divided into two parts:

- The first part describes the maintenance procedures.
- The second part describes troubleshooting procedures, from identifying problems to interpreting the operating conditions by the lit LEDs on the front cover.

## Maintenance

Preventative maintenance is the key to a reliable, safe and efficient system. The core of any preventive maintenance program is a list of periodic tasks.

In the paragraphs that follow are suggestions for a monthly list and a yearly list.



*Note:*
*The monthly list and the yearly list are an average interval. If your environment is dirty, then the intervals may need to be shorter.*



*Caution:*
*Turn off power before disconnecting or installing sensors, controls or modules.*

### Monthly Checklist

1. Inspect flame-sensing devices for good condition and cleanliness. Keep scanner lenses clean with a soft, damp cloth, since small amounts of dust will measurably reduce the flame signal strength. Wash the flame rod electrode and insulator with soap and water, then rinse and dry thoroughly.
2. Test all the alarm systems for proper signals.
3. Check ignition spark electrodes and check proper gap.
4. Test interlock sequence of all safety equipment as described on page 27: manually make each interlock fail, noting what related equipment closes or stops as specified by the manufacturer.

   Test flame safeguard by manually shutting off gas to the burner.

### Yearly Checklist

1. Test (leak test) safety shut-off valves for tightness of closure.
2. Test pressure switch settings by checking switch movements against pressure setting and comparing with actual impulse pressure.
3. Visually check ignition cable and connectors.
4. Make sure that the following components are not damaged or distorted:
   - the burner nozzle
   - the spark plugs
   - the flame sensors
   - the flame tube or combustion block of the burner

## TROUBLESHOOTING

| PROBLEM | POSSIBLE CAUSE | SOLUTION |
|---|---|---|
| Cannot initiate start sequence | Main valve is not closed. | Check main valve closed switch.<br>No voltage on V (or D). |
| | Air pressure switch has not made contact. | Check air pressure switch adjustment.<br>Check air filter.<br>Check blower rotation.<br>Check outlet pressure from blower.<br>No voltage on 6 after 8 is on. |
| | High gas pressure switch has tripped. | Check incomming gas pressure; adjust gas pressure if necessary.<br>Check pressure switch setting and operation.<br>No voltage to 7. |
| | Low gas pressure switch has tripped. | Check incomming gas pressure; adjust gas pressure if necessary.<br>Check pressure switch setting and operation.<br>No voltage to 7. |
| | Malfunction of flame safeguard system such as a shorted-out flame sensor or electrical noise in the sensor line. | Have qualified electrician investigate and rectify. |
| | Purge cycle not completed. | Check switch settings.<br>Check air switch. |
| | Main power is off. | Make sure power is on to control system. |
| | No power to control unit. | Call qualified electrician to investigate. |
| Scrambled messages on remote display. | Electrical interference. | Check grounding in system.<br>Separate communication cable.<br>Move ignition circuit. |
| "UNSAFE AIR SHORT" message appears on display. | Improperly adjusted air switch.<br>Air switch either shorted or wired wrong. | Check air switch settings.<br>Check wiring to air switch. |
| Burner flame fails but no flame failure indication occurs. | A faulty scanner. | Check scanner as explained in checklists in "Maintenance" portion of this Section. |
| | Improperly connected sensor wires. | Check wiring diagram on page 20 or 21 as well as appropriate sensor information in Section 6. |
| | Electrical interference from other current carrying wires. | Check Note information on page 24 regarding sensor wiring. |
| Voltage reading greater than 15VDC at "Test Point" on Veri-Flame faceplate. | Improper grounding. | Check grounding of neutral at control power transformer. |

## LED Status

This section describes the status of operating conditions based on the LED or combination of LEDs which are lit on the front cover of each Veri-Flame model.

***Table 8.1*** **LED Status & Conditions for Veri-Flame No Purge Models**

| LED(s) Lit | Possible Causes |
|---|---|
| INTERLOCKS CLOSED | 1) The interlocks are closed (normal operation), power on terminal 7. |
| SYSTEM ERROR | 1) The flame detected is out of sequence, flame signal light is on.<br>2) The sensor is "runaway," flame signal light is on.<br>3) Inductance is detected on sensor wires, flame signal light is on.<br>4) Voltage wired into terminals 3, 4, or 5.<br>5) Internal relay contacts welded.<br>6) Internal controller failure.<br>7) Main valve closed switch defective, no power to V. |
| FLAME FAILURE | 1) Pilot flame is not established in selected TFI.<br>2) Main flame is not established in selected TFI.<br>3) Main flame fails within 35 seconds of TFI.<br>4) Flame failed during operation in non-recycle mode.<br>5) Flame failed 35 seconds after TFI and was not established after try in recycle mode. |

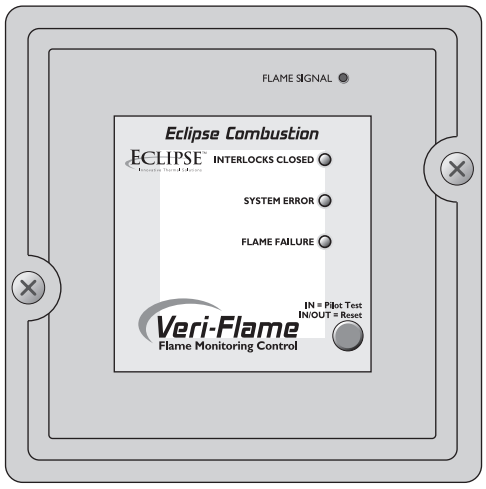


No Purge Model

***Table 8.2*** **LED Status & Conditions for Veri-Flame Purge Models**

| LED(s) Lit | Possible Causes |
|---|---|
| INTERLOCKS CLOSED | 1) The interlocks are closed (normal operation), power on terminal 7. |
| SYSTEM ERROR | 1) The flame detected is out of sequence, flame signal light is on.<br>2) The sensor is "runaway", flame signal light is on.<br>3) Inductance is detected on sensor wires, flame signal light is on.<br>4) Voltage wired into terminals 3, 4 or 5.<br>5) Internal relay contacts welded.<br>6) Internal controller failure.<br>7) Air flow switch closed before start-up.<br>8) Main fuel valve switch opens after shutdown or before start-up, no power to V. |
| FLAME FAILURE | 1) Pilot flame is not established in selected TFI.<br>2) Main flame is not established in selected TFI.<br>3) Main flame fails within 35 seconds of TFI.<br>4) Flame failed during operation in non-recycle mode.<br>5) Flame failed 35 seconds after TFI and was not established after one try in recycle mode. |
| AIR FAILURE | 1) Air flow switch not closed within ten seconds of start-up.<br>2) Air flow switch is open during timing cycle.<br>3) Air flow switch is open during firing cycle. |

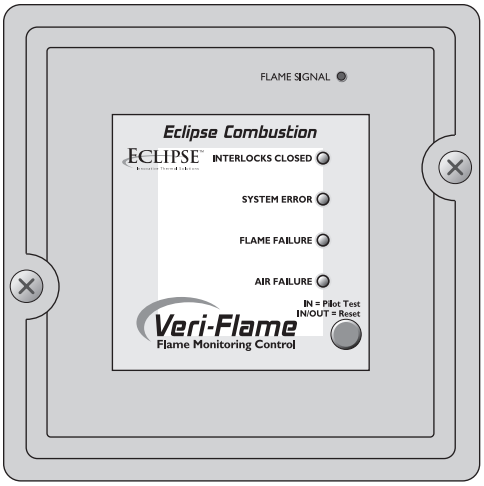


Purge Model

***Table 8.3*** **LED Status & Conditions for Veri-Flame Modulation Models**

| LED(s) Lit | Possible Causes |
|---|---|
| INTERLOCKS CLOSED | 1) The interlocks are closed (normal operation), power on terminal 7. |
| SYSTEM ERROR | 1) The flame detected is out of sequence, flame signal light is on.<br>2) The sensor is "runaway", flame signal light is on.<br>3) Inductance is detected on sensor wires, flame signal light is on.<br>4) Voltage wired into terminals 3, 4 or 5.<br>5) Internal relay contacts welded.<br>6) Internal controller failure.<br>7) Air flow switch closed before start-up.<br>8) High purge damper switch and/or main fuel valve switch opens during start-up.<br>9) Low fire switch not made before TFI. |
| FLAME FAILURE | 1) Pilot flame is not established in selected TFI.<br>2) Main flame is not established in selected TFI.<br>3) Main flame fails within 35 seconds of TFI.<br>4) Flame failed during operation in non-recycle mode.<br>5) Flame failed 35 seconds after TFI and was not established after try in recycle mode. |
| AIR FAILURE | 1) Air flow switch not closed within ten seconds of start-up.<br>2) Air flow switch is open during timing cycle.<br>3) Air flow switch is open during firing cycle. |
| INTERLOCKS CLOSED *and* AUTO | 1) Burner in run mode, firing rate determined by automatic controller (normal operation). |
| INTERLOCKS CLOSED *and* HIGH FIRE | 1) Purge high sequence (normal operation). |
| INTERLOCKS CLOSED *and* LOW FIRE | 1) Purge low sequence (normal operation). |

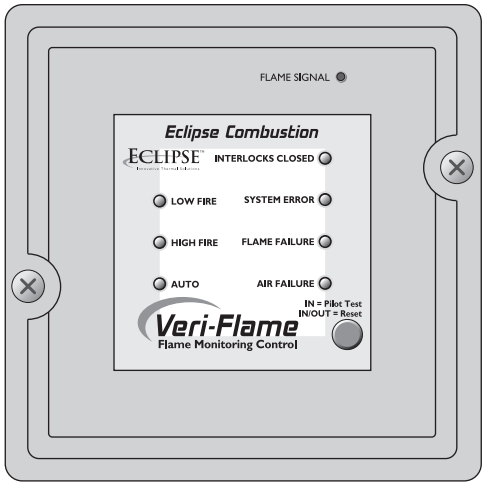


Modulation Model

# Remote Display Messages

9

## Introduction

This section covers how the optional remote display is used with the Veri-Flame. The remote display provides LCD messages which monitor the status of the Veri-Flame's functions as well as any lockout conditions. This section is divided into two parts or tables:

- The first table describes the start-up and shutdown monitoring sequences of the Veri-Flame and how the progress (or halt) of the sequence can be monitored by the messages on the remote display.
- The second table alphabetically lists and explains the diagnostic messages which can appear on the remote display.

## *Table 9.1* Veri-Flame Operating Sequence

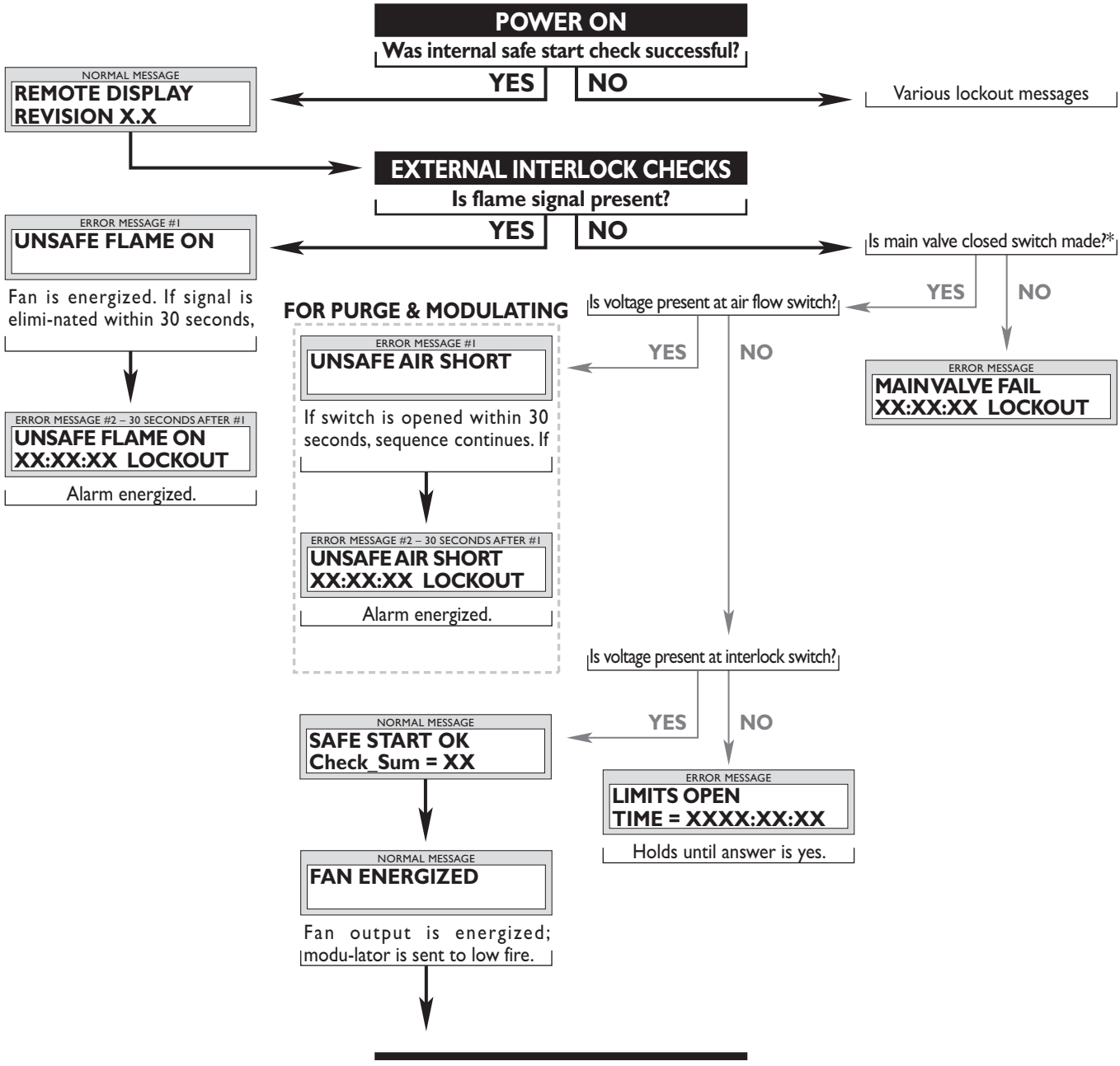

***Table 9.1*** **Veri-Flame Operating Sequence** (continued)

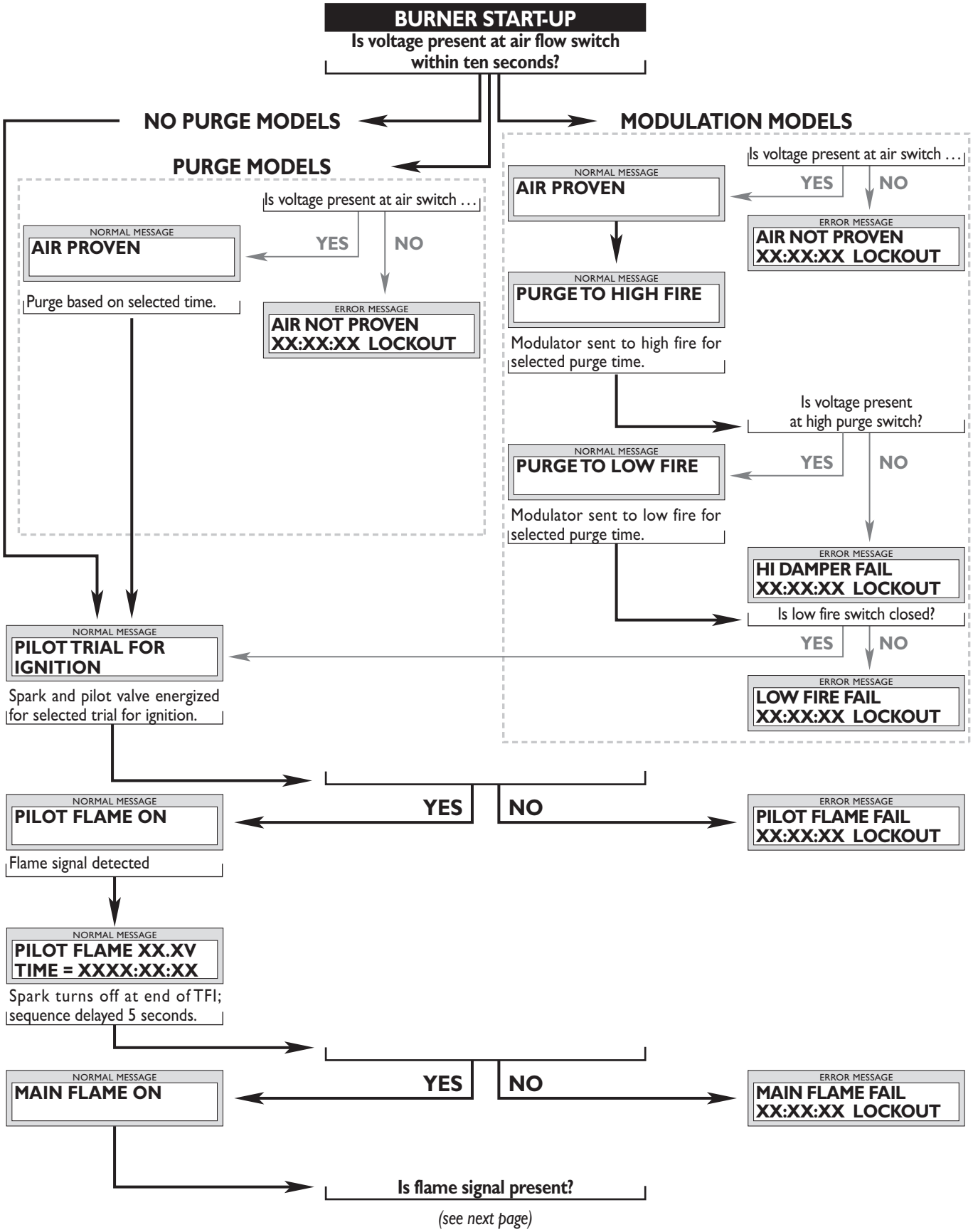

*Table 9.1* **Veri-Flame Operating Sequence** (continued)

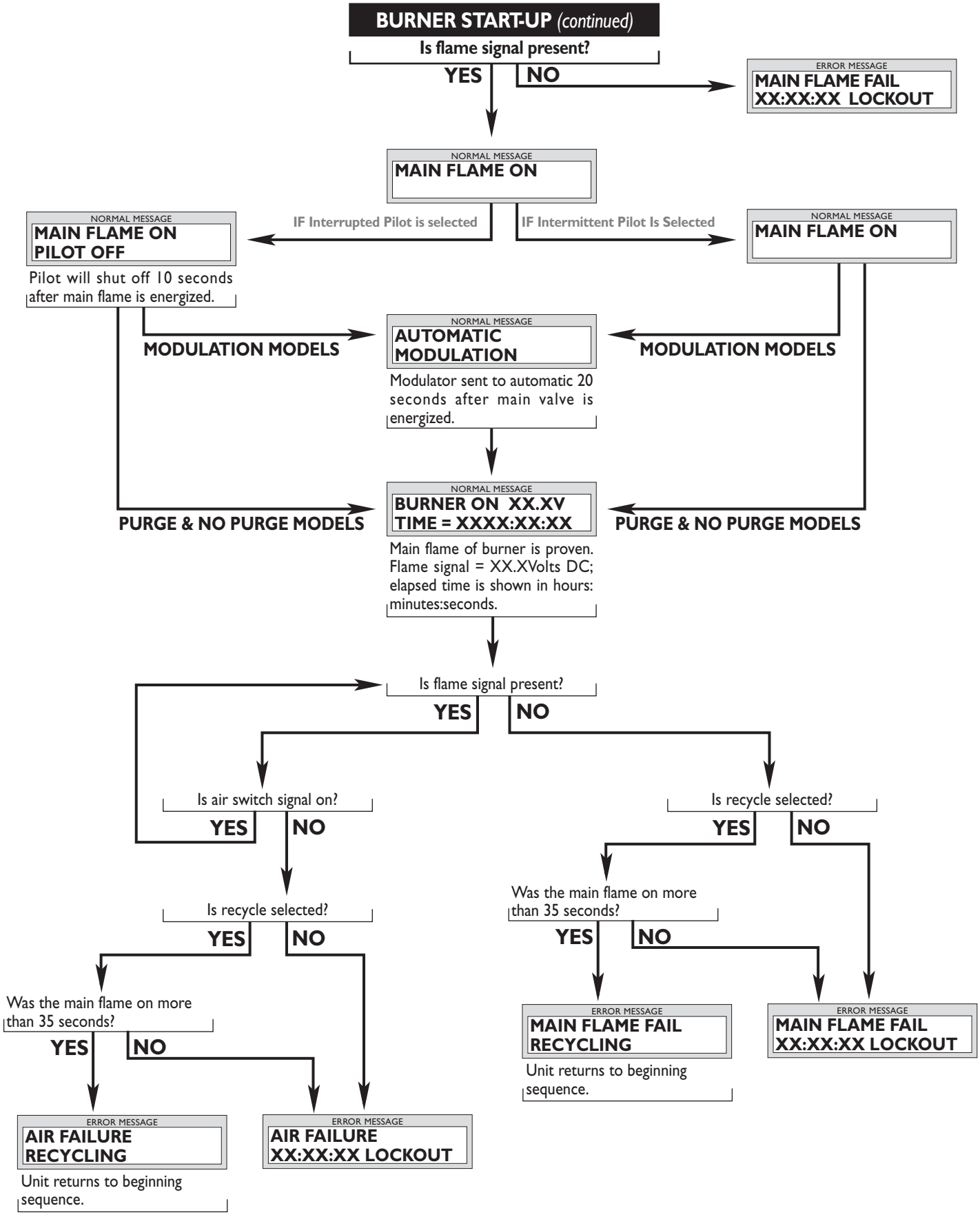

***Table 9.1*** **Veri-Flame Operating Sequence** (continued)

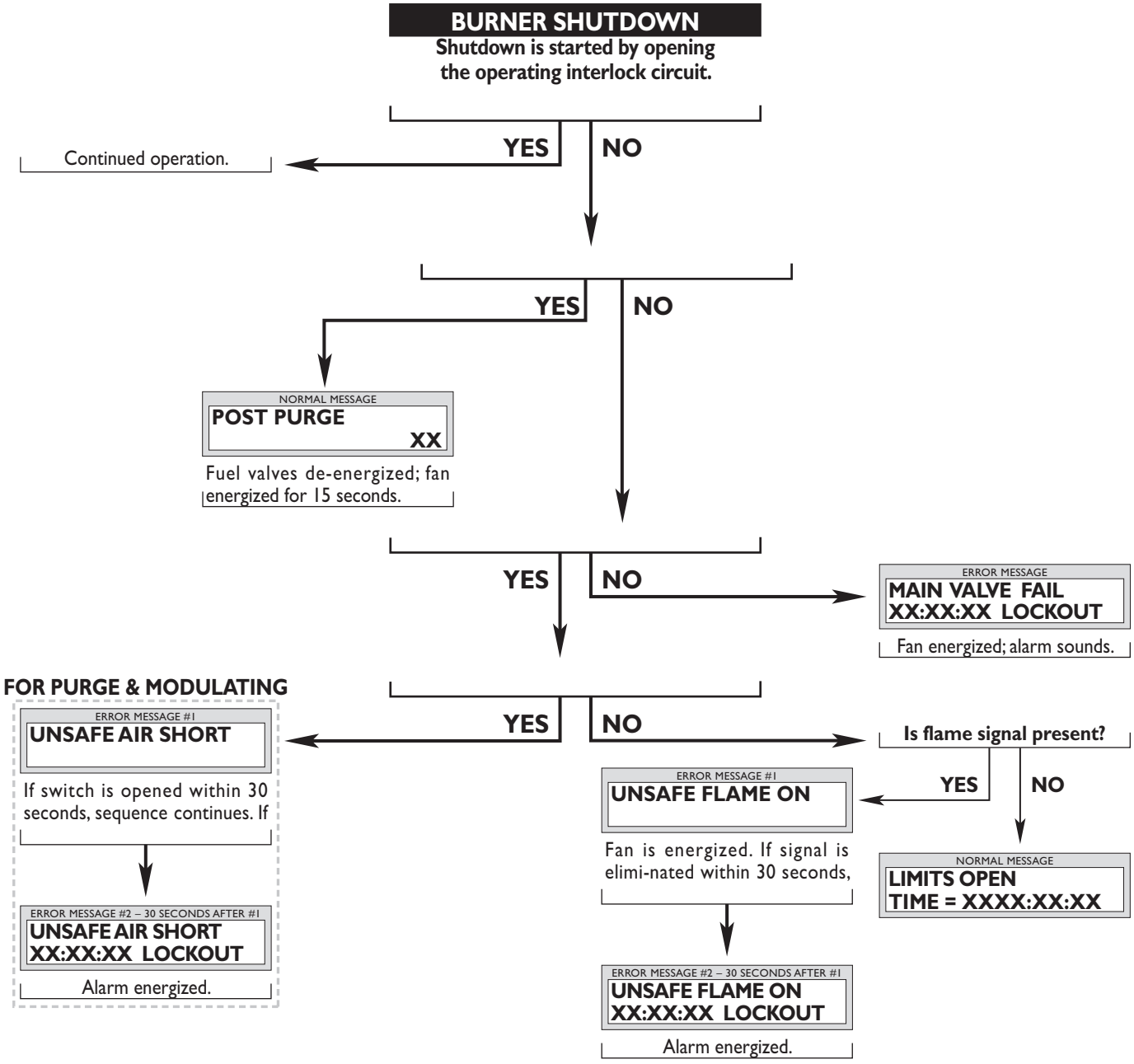


*Applies to purge and no purge models only.

*Table 9.2* **Remote Display Diagnostic Messages (Listed Alphabetically)**

| Message | Type | Explanation |
|---|---|---|
| **AIR FAILURE XX:XX:XX LOCKOUT** | Lockout | **For purge & modulation models:** Combustion air flow limit switch opened for more than two seconds once initially proven. |
| **AIR FAILURE RECYCLING** | Status | **For purge & modulation models:** Combustion air flow limit switch opened; if "recycle" has been selected, the Veri-Flame will restart the sequence after air failure (see "Recycle Mode" on page 14). |
| **AIR NOT PROVEN XX:XX:XX LOCKOUT** | Lockout | **For purge & modulation models:** Combustion air flow limit switch did not make within ten seconds of fan being energized. |
| **AIR PROVEN** | Status | **For purge & modulation models:** Combustion air flow limit switch closed within ten seconds of fan being energized. |
| **AUTOMATIC MODULATION** | Status | **For modulation models only:** Modulating motor is sent to automatic operation. |
| **BURNER ON XX.XV TIME=XXXX:XX:XX** | Status | Main flame of burner is proven in the automatic modulation mode; flame strength is XX.XV (volts DC). Elapsed time is shown in hours: minutes:seconds. |
| **D-INTERNAL FAIL XX:XX:XX:XX LOCKOUT** | Lockout | **For modulation models only:** Internal control failure; replace controller. |
| **FAN ENERGIZED** | Status | **For purge & modulation models:** Blower motor is energized at the start of pre-purge. |
| **FLAME FAILURE XX:XX:XX LOCKOUT** | Lockout | Main flame lost during operation in the automatic modulation mode. Burner number (X) given of failed unit. |
| **HI DAMPER/POVC XX:XX:XX LOCKOUT** | Lockout | **For modulation models only:** High damper or high purge rate switch did not make at the end of pre-purge to high fire. |
| **K-INTERNAL FAIL XX:XX:XX LOCKOUT** | Lockout | Internal control failure; replace controller. |
| **L-INTERNAL FAIL XX:XX:XX LOCKOUT** | Lockout | Internal control failure; replace controller. |
| **LIMITS OPEN TIME=XXXX:XX:XX** | Status | The controller has completed its internal checks and is standing by for the interlocks to close. |
| **LOW FIRE FAIL XX:XX:XX LOCKOUT** | Lockout | **For modulation models only:** Low fire switch is open just prior to pilot trial for ignition. |
| **MAIN FLAME FAIL XX:XX:XX LOCKOUT** | Lockout | Main flame was not established during the main burner trial for ignition. |
| **MAIN FLAME FAIL RECYCLING** | Status | Main flame lost during automatic modulation; control will recycle once if "recycle" has been selected. |

*Table 9.2* **Remote Display Diagnostic Messages** (continued)

| Message | Type | Explanation |
|---|---|---|
| **MAIN FLAME ON** | Lockout | Main valve has been energized and main flame proven during trial for ignition. |
| **MAIN FLAME ON PILOT OFF** | Status | Pilot valve is de-energized and main flame is on. |
| **MAIN VALVE FAIL XX:XX:XX LOCKOUT** | Lockout | **For purge and no purge models:** Main valve closed switch is open before start-up or after burner shutdown. |
| **NO PURGE SELECT XX:XX:XX LOCKOUT** | Lockout | **For purge & modulation models:** No purge time was selected; lockout prior to purge to high fire. |
| **PILOT FLAME FAIL XX:XX:XX LOCKOUT** | Lockout | Pilot flame was not established during the pilot trial for ignition. |
| **PILOT ON** | Status | Pilot flame is proven; transformer is de-energized; remaining countdown for pilot trial for ignition is. |
| **PILOT TRIAL FOR IGNITION** | Status | Pilot valve and ignition transformer are energized; countdown for pilot trial for ignition begins. |
| **POST PURGE** | Status | **For purge & modulation models:** 15 second post purge is started on burner shutdown. |
| **PROGM SWITCH ERR XX:XX:XX LOCKOUT** | Lockout | DIP switch improperly set or changed during cycle. |
| **PURGE TO HIGH FIRE** | Status | **For modulation models only:** Modulating motor is sent to high fire. |
| **PURGE TO LOW FIRE** | Status | **For modulation models only:** Modulating motor is sent to low fire. |
| **RELAY FAIL XX:XX:XX LOCKOUT** | Lockout | Internal relay(s) fail initial check. Check ratings. If lockout still occurs after overload is eliminated, replace control. |
| **SAFE START OK** | Status | Control has completed internal safe-start check. |
| **UNSAFE AIR SHORT** | Status | **For purge & modulation models:** Combustion air switch is closed before start-up or after shutdown; control holds start-up until switch reopens; if interlocks close before switch opens, alarm is energized. |
| **UNSAFE AIR SHORT XX:XX:XX LOCKOUT** | Lockout | **For purge & modulation models:** Same conditions as above, except the interlocks close before the switch reopens, causing a lockout and the alarm being energized. |

*Table 9.2* **Remote Display Diagnostic Messages** (continued)

| Message | Type | Explanation |
|---|---|---|
| **UNSAFE FLAME ON** | Hold | Flame signal—actual, induced, or runaway scanner—is detected before start-up or after shutdown. The fan is energized. If the cause is corrected within 30 seconds, as in afterburn, the control will turn off the fan and continue the sequence. |
| **UNSAFE FLAME ON XX:XX:XX LOCKOUT** | Lockout | Same conditions as above, except the cause has not been corrected within 30 seconds, resulting in a lockout and the alarm being energized. |
| **UNSAFE–FLM–PURGE** | Hold | **For purge & modulation models:** Flame signal—actual, induced, or runaway scanner—is detected during the selected purge time period. The fan is energized. If the cause is corrected within 30 seconds, as in afterburn, the control will turn off the fan and continue the sequence. |
| **UNSAFE–FLM–PURGE XX:XX:XX LOCKOUT** | Lockout | **For purge & modulation models:** Same conditions as above, except the cause has not been corrected within 30 seconds, resulting in a lockout and the alarm being energized. |
| **V–INTERNAL FAULT XX:XX:XX LOCKOUT** | Lockout | Internal control failure; replace controller. |
| **WATCHDOG FAIL XX:XX:XX LOCKOUT** | Lockout | Internal control failure; replace controller. |
| **XXXXXXX XXXXXTESTXX** | Status | In combination with other messages, shows the control is in the minimum pilot test mode. |

# Appendix

## Conversion Factors

**Metric to English.**

| From | To | Multiply by |
|---|---|---|
| cubic meter ($m^3$) | cubic foot ($ft^3$) | 35.31 |
| cubic meter/hour ($m^3/h$) | cubic foot/hour (cfh) | 35.31 |
| degrees Celsius (°C) | degrees Fahrenheit (°F) | (°C x 1.8) + 32 |
| kilogram (kg) | pound (lb) | 2.205 |
| kilowatt (kW) | Btu/hr | 3414 |
| meter (m) | foot (ft) | 3.28 |
| millibar (mbar) | inches water column (“wc) | 0.401 |
| millibar (mbar) | pounds/sq in (psi) | $14.5 \times 10^{-3}$ |
| millimeter (mm) | inch (in) | $3.94 \times 10^{-2}$ |

**Metric to Metric.**

| From | To | Multiply by |
|---|---|---|
| kiloPascals (kPa) | millibar (mbar) | 10 |
| meter (m) | millimeter (mm) | 1000 |
| millibar (mbar) | kiloPascals (kPa) | 0.1 |
| millimeter (mm) | meter (m) | 0.001 |

**English to Metric.**

| From | To | Multiply by |
|---|---|---|
| Btu/hr | kilowatt (kW) | $0.293 \times 10^{-3}$ |
| cubic foot ($ft^3$) | cubic meter ($m^3$) | $2.832 \times 10^{-2}$ |
| cubic foot/hour (cfh) | cubic meter/hour ($m^3/h$) | $2.832 \times 10^{-2}$ |
| degrees Fahrenheit (°F) | degrees Celsius (°C) | (°F – 32) ÷ 1.8 |
| foot (ft) | meter (m) | 0.3048 |
| inches (in) | millimeter (mm) | 25.4 |
| inches water column (“wc) | millibar (mbar) | 2.49 |
| pound (lb) | kilogram (kg) | 0.454 |
| pounds/sq in (psi) | millibar (mbar) | 68.95 |

# Illustrated Parts List

| Category | Pos. No. | Description | Model Number | Part Number |
|---|---|---|---|---|
| Sensors | 1 | Straight U.V. scanner | 5600-91 | 49600-91 |
| | —— | NEMA 4 U.V. scanner | 5600-91N4 | 20898 |
| | 2 | 90° U.V. scanner | 5600-90A | 49600-90 |
| | 4 | Self-check scanner | 5602-91 | 49602-91 |
| | 5 | Solid-state U.V./I.R. scanner | 5600-92SC | 21349 |
| | —— | 10-foot cable for self-check scanner | 5602-91-7 | 49602-91-7 |
| | 6 | Scanner support (1) | 5600-90A SS | 20722 |
| | 7 | Magnifying lens assembly | 5600-98 | 49600-98 |
| | —— | Lens, magnifying | | 49600-99 |
| | —— | Lens, non-magnifying (2) | | 18165 |
| | 8 | Insulated coupling | 5600-99 | 49099 |
| | —— | Cable, coax, RG62A/U for flame rod | | 21741 |
| | —— | Heat block seal | 23HBS | 4400011 |
| Bases | 9 | Internal terminal base, metal | 5602-10 | 49602-10 |
| | 10 | Exposed terminal base, metal | 5602-10-1 | 49602-10-1 |
| | —— | Internal terminal base, plastic | 5602-10-P | 22194 |
| | —— | Exposed terminal base, plastic | 5602-10-1P | 22195 |
| | 11 | Modulation base | 5602-40 | 49602-40 |
| | —— | Screw, mounting to plastic base | | 22110 |
| | —— | Screw, mounting to metal base | | 22385 |
| Test | —— | Tester for Veri-Flame units | 5602 | 49602 |
| | —— | Relay module (3) | 5602-40-4 | 49240-2 |
| Display | —— | Remote display, 120VAC with keypad | 5602 DBP | 20896 |
| | —— | Cable for remote display | | 20318 |

(1) For 90º U.V. scanner (Model No. 5600-90A), NEMA 4 U.V. scanner (5600-91N4) and solid state U.V./I.R. scanner (5600-92SC)
(2) For magnifying lens assembly (Model No. 5600-98), self-check scanner (5602-91), and heat block seal (23HBS)
(3) Used to test modulation controls on tester (Model No 5602) above.

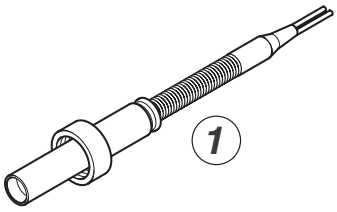


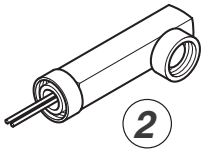


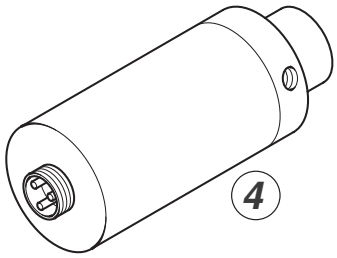


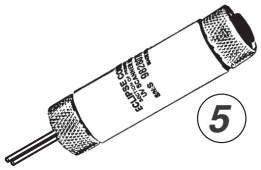





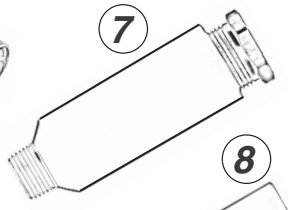


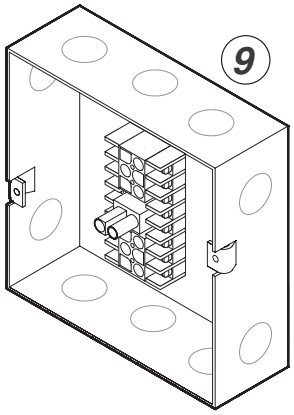





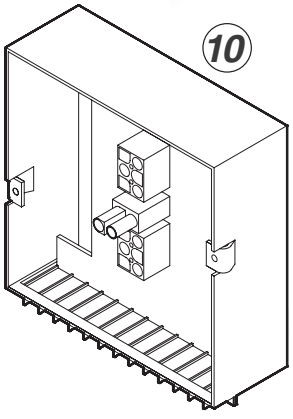


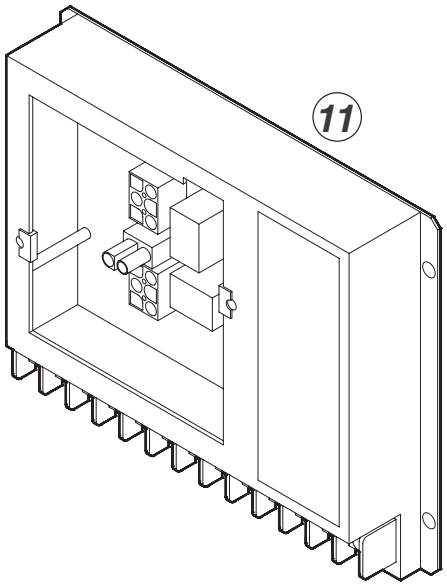


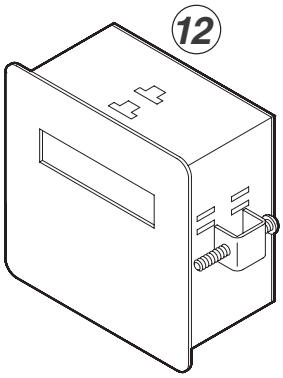


ECLIPSE™
Innovative Thermal Solutions

**Eclipse Combustion**
*www.eclipsenet.com*



Litho in USA

# SECTION 4
# GAS VALVES & PRESSURE SWITCHES

US FURNACES, LLC MAX 4000

## General Description

The AH2E Hydramotors are push-type, self-contained, electrohydraulic linear actuators which extend when powered and retract by spring force upon power interruption.

AH2E Hydramotors provide a fast spring return shutoff time of one second or less. When the actuator is mounted to a V710 gas valve, position indicators on both sides of the actuator show the open or closed position of the valve.

The AH2E Hydramotor/V710 gas valve combination provides main line gas control for a wide range of applications, including boilers, furnaces, ovens and all types of industrial and commercial burners. It is available in either a slow or fast opening construction.


AH2E shown on V710(B) body.

## Specifications

**Power Requirement:** 220 VA max.

**Closing Time:** One second max.

**Opening Time:**
Fast Opening: 14 seconds max.
Slow Opening: 26 seconds max.

**Note:** Opening time is double between -30˚F and -40˚F ambient. Opening time increases 20% when operating on 50Hz.

## Enclosure

**Standard:** General Purpose Type 1

**Optional:** Watertight Type 4
(Also meets General Purpose Type 1 and Raintight Type 3)

## Ambient Temperature

-40˚F to 150˚F (-40˚C to 66˚C)

## Electrical

**Standard voltages:** 120V/60Hz, 110V/50Hz
**Non-standard voltages:** 24V/60Hz, 240V/60Hz, 220V/50Hz

**Proof of Closure Switch: (optional)**
A factory set, non-field adjustable SPDT switch. 1800VA max. connected load (e.g. one 15A max. load @ 24V or 120V; one 7.5A max. load at 240V).

**Auxiliary Switches: (optional)**
One or two integral SPDT switches; field adjustable to actuate at any position of stroke. 1800 VA max. connected load (e.g. one 15A max. load @ 24V or 120V; one 7.5A max. load at 240V).
(Only one aux. switch available with proof of closure construction.)

## Electrical Characteristics

| Voltage/Hz* | Amperes | | |
|---|---|---|---|
| | Inrush | Opening | Holding |
| 24V/60 | 28 | 8.2 | 0.49 |
| 120V/60, 110/50 | 5.6 | 2.1 | 0.09 |
| 240V/60, 220/50 | 2.8 | 1.1 | 0.04 |

*Current increases by 20% for 50 Hz operation.

## Installation

AH2E Hydramotor mounts in any position directly to a V710 valve with 3 set screws.

## Damper Arm Rating

Drives damper in one direction only. 20 lb. max. at 2.85" radius at 20˚F to 150˚F and 10 lb. max. at -40˚F to 20˚F. Travel 2" max.

## Approvals

**AH2E Hydramotor with V710 valve**
UL listed to standard 429 "Electrically Operated Valves," Guide YIOZ, File MP932 Safety Valves

FM Approved to Class 7400 "liquid and gas safety shutoff valves."

CSA Certified to:
1. Automatic Gas Valves ANSI Z21.21 CSA 6.5, C/I, File 109157 and 113070.
2. Automatic Gas Safety Shutoff Valves (CGA 3.9), File 113070

## Ordering Information

Important: Order by Catalog Number and add suffix number for desired optional feature. e.g. AH2E112A5

## Specifications

| Applications | Catalog Number | | |
|---|---|---|---|
| | 24V/60Hz | 120V/60Hz, 110V/50Hz | 240V/60Hz, 220V/50Hz |
| **On-Off Slow Opening (26 seconds Max) (Watertight)** | | | |
| Standard | AH2E101A | AH2E102A | AH2E104A |
| Proof of closure | AH2E101S | AH2E102S | AH2E104S |
| **On-Off Slow Opening (26 seconds Max) (General Purpose)** | | | |
| Standard | AH2E201A | AH2E202A | AH2E204A |
| Proof of closure | AH2E201S | AH2E202S | AH2E204S |
| **On-Off Fast Opening (14 seconds Max) (Watertight)** | | | |
| Standard | AH2E111A | AH2E112A | AH2E114A |
| Proof of closure | AH2E111S | AH2E112S | AH2E114S |
| **On-Off Fast Opening (14 seconds Max) (General Purpose)** | | | |
| Standard | AH2E211A | AH2E212A | AH2E214A |
| Proof of closure | AH2E211S | AH2E212S | AH2E214S |

## Optional Features

**Add appropriate suffix number to catalog number**

Damper shaft (add Suffix 1)
One auxiliary switch (add Suffix 2)
Damper shaft & arm (add Suffix 4)
Damper shaft, arm & one auxiliary switch (add Suffix 5)
Two auxiliary switches (add Suffix 6)*
Damper shaft w/arm & two auxiliary switches (add Suffix 7)*

*Not available with proof of closure constructions

## Dimensions inches (mm)

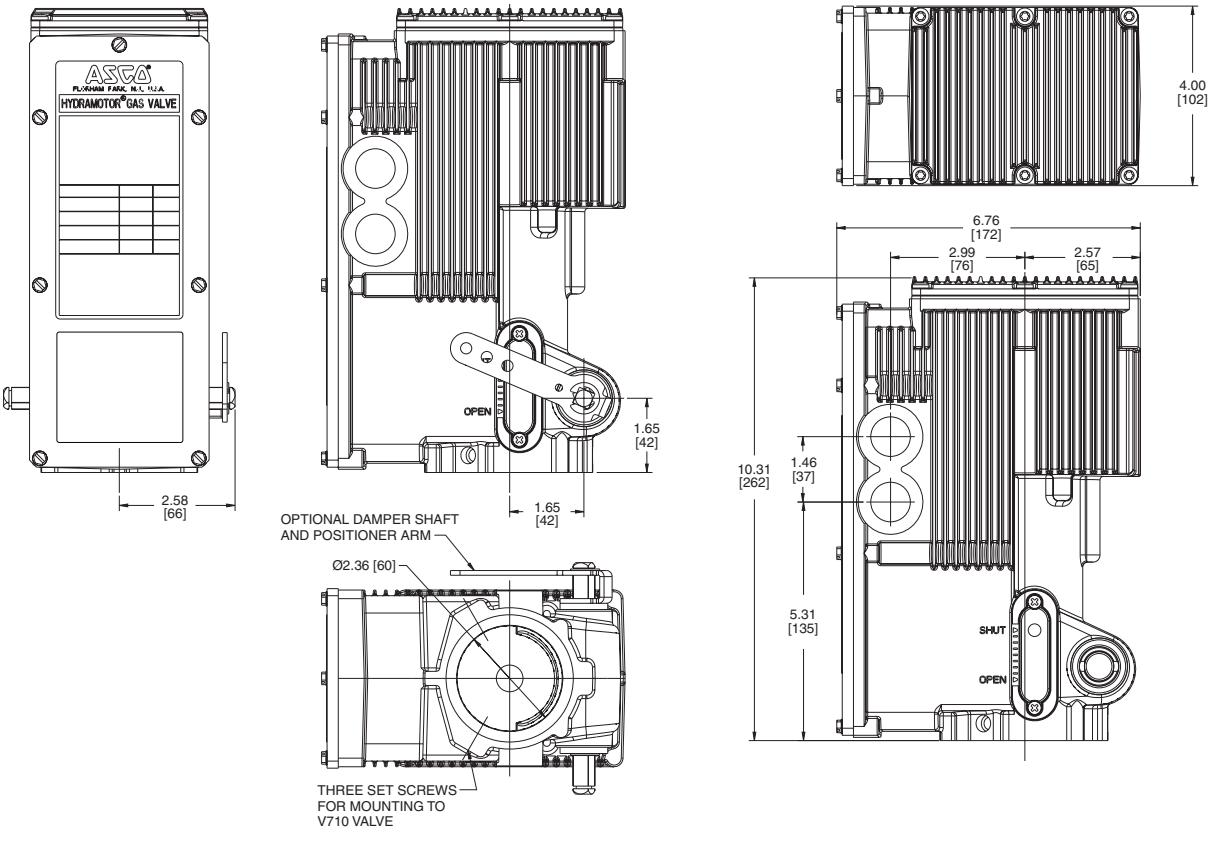


COMBUSTION

## General Description

The AH4E Hydramotors are three-position push-type, self-contained, electrohydraulic linear actuators featuring dual internal control valves for repeatable positioning. The low-fire position is factory set at the stroke midpoint, but can be field adjustable to any position between 15% and 100% of stroke.

When power is applied, the actuator shaft travels to the low-fire position. After an external switch completes the low-fire controller circuit, the shaft continues on to the high-fire setting. Opening the external switch returns the shaft to the low-fire setting, and power interruption fully closes the valve in one second or less from any position.

The AH4E Hydramotor/V710(B) gas valve combination provides reliable main line gas control for a wide range of applications, including boilers, furnaces, ovens and all types of industrial and commercial burners.


AH4E shown on V710(B) body.

## Specifications

**Power Requirement:** 220 VA max.

**Closing Time:** One second max.

**Opening Time:**
Fast Opening: 14 seconds max.
Slow Opening: 26 seconds max.

**Note:** Opening time is double between -30˚F and -40˚F ambient. Opening time increases 20% when operating on 50Hz.

## Enclosure

**Standard:** General Purpose Type 1

**Optional:** Watertight Type 4
(Also meets General Purpose Type 1 and Raintight Type 3)

## Ambient Temperature

-40˚F to 150˚F (-40˚C to 66˚C)

## Electrical

**Standard voltages:** 120V/60Hz, 110V/50Hz

**Non-standard voltages:** 240V/60Hz, 220V/50Hz

**Proof of Closure Switch (POC): (optional)**
A factory set, non-field adjustable SPDT switch. 1800VA max. connected load (e.g. 15A max. load @ 120V; 7.5A max. load at 240V).

**Auxiliary Switch: (optional)**
One integral SPDT switch; field adjustable to actuate at any position of stroke. 1800 VA max. connected load (e.g. 15A max. load @ 120V; 7.5A max. load at 240V). (Note: Not available if optional POC switch is ordered)

## Electrical Characteristics

| Voltage/Hz* | Amperes | | |
|---|---|---|---|
| | Inrush | Opening | Holding |
| 120V/60, 110/50 | 5.6 | 2.2 | 0.18 |
| 240V/60, 220/50 | 2.8 | 1.2 | 0.09 |

*Current increases by 20% for 50 Hz operation.

## Installation

AH4E Hydramotor mounts in any position directly to a V710 valve with 3 set screws.

## Damper Arm Rating

Drives damper in one direction only. 20 lb. max. at 2.85" radius at 20˚F to 150˚F and 10 lb. max. at -40˚F to 20˚F. Travel 2" max.

## Approvals

**AH4E Hydramotor with V710 valve**
UL listed to standard 429 "Electrically Operated Valves," Guide YIOZ, File MP932 Safety Valves

FM Approved to Class 7400 "liquid and gas safety shutoff valves."

CSA Certified to:
1. Automatic Gas Valves ANSI Z21.21 CSA 6.5, C/I, File 109157 and 113070.
2. Automatic Gas Safety Shutoff Valves (CGA 3.9), File 113070

## Ordering Information

Important: Order by Catalog Number and add suffix number for desired optional feature. e.g. AH4E112A1

## Specifications

| Applications | Catalog Number | |
|---|---|---|
| | 120V/60Hz, 110V/50Hz | 240V/60Hz, 220V/50Hz |
| **On-Off Slow Opening (26 seconds Max) (Watertight)** | | |
| Standard | AH4E102A | AH4E104A |
| Proof of closure | AH4E102S | AH4E104S |
| **On-Off Slow Opening (26 seconds Max) (General Purpose)** | | |
| Standard | AH4E202A | AH4E204A |
| Proof of closure | AH4E202S | AH4E204S |
| **On-Off Fast Opening (14 seconds Max) (Watertight)** | | |
| Standard | AH4E112A | AH4E114A |
| Proof of closure | AH4E112S | AH4E114S |
| **On-Off Fast Opening (14 seconds Max) (General Purpose)** | | |
| Standard | AH4E212A | AH4E214A |
| Proof of closure | AH4E212S | AH4E214S |

## Optional Features

**Add appropriate suffix number to catalog number**

Damper shaft (add Suffix 1)
Damper shaft & arm (add Suffix 4)
One auxiliary switch (add Suffix 2)*
Damper shaft, arm & one auxiliary switch (add Suffix 5)*

*Not available with proof of closure constructions

## Dimensions inches (mm)

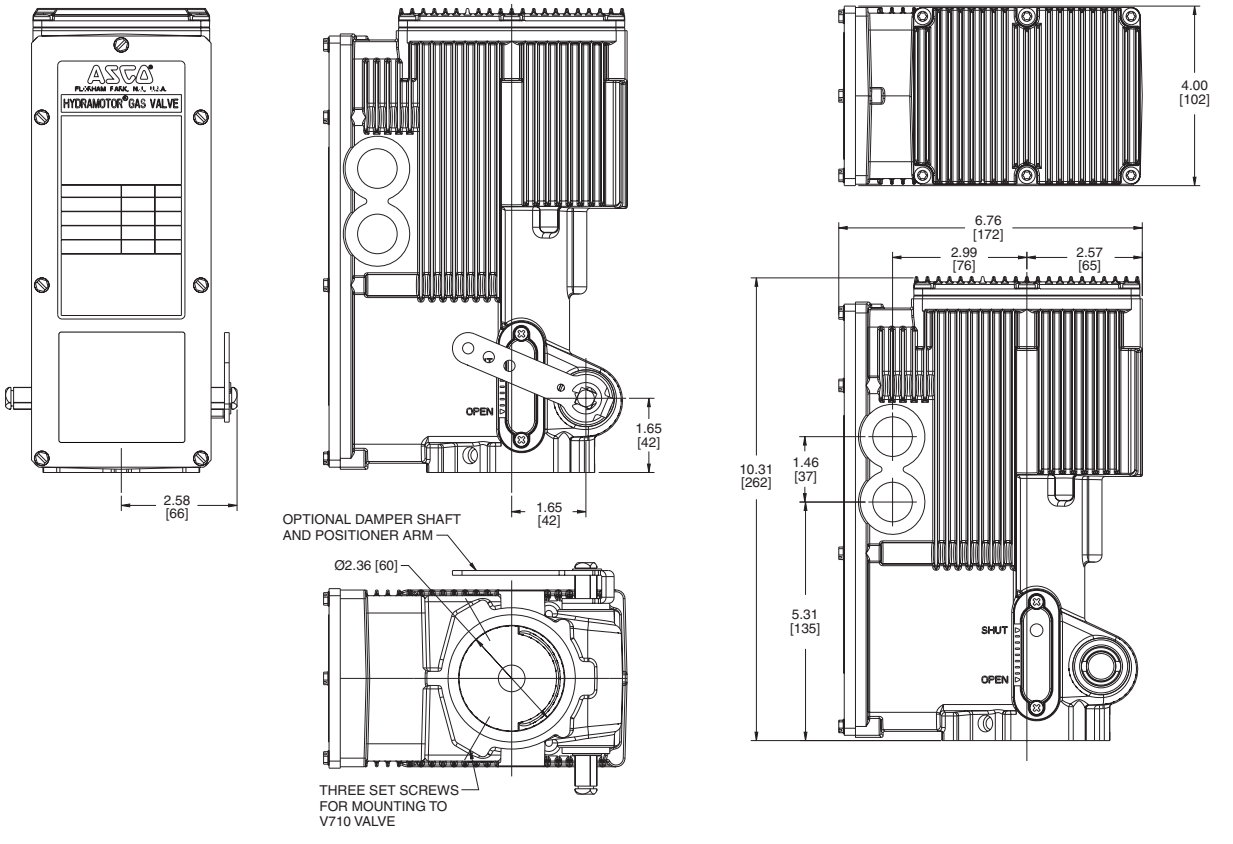


COMBUSTION

## General Description

These 2-way normally closed valve bodies are designed for on/off control of commecial or industrial gas burners. The V710(B) is designed exclusively for use with the AH(E) Hydramotor® actuator. The AH(E) Hydramotor valve consists of two assemblies; the V710(B) valve body and the AH(E) Hydramotor actuator.

The V710(B) is a push-to-open valve which opens when the valve stem is depressed by an AH(E) Hydramotor. An internal return spring closes the valve when the Hydramotor actuator is de-energized. Optional flange adapters are available for ease of installation and service. These valves are provided with upstream and downstream pipe taps with plugs for routine testing.



**Series V710(B) valve body with AH(E) Hydramotor**

## Fluid

Fuel Gas

## Construction

| Valve Parts in Contact with Fluids | |
|---|---|
| **Body** | Die-cast aluminum |
| **Bonnet** | Die-cast aluminum |
| **Seals** | Nitrile |
| **Springs** | Zinc-plated steel |
| **Stem Bushing** | Delrin |
| **Valve Stem** | 303 stainless steel |
| **Discs** | NBR |
| **Retaining Ring** | 303 stainless steel |
| **Pipe Plugs** | Zinc-plated steel |
| **Seal Ring** | PTFE (models with overtravel) |
| **Stem Connector** | 303 stainless steel |

## Model Types

**Quick Opening Trim: (Standard)**
For applications where metered flow control is not required.

**Quick Opening w/Valve Seal Overtravel Trim: (Suffix V22)**
For any "on-off" application where the user, code or approval agency requires a valve seal overtravel arrangement.

**Linear Trim: (Suffix V15)**
For applications that require flow control, such as slow opening, or low fire turn down

**Linear w/Valve Seal Overtravel Trim: (Suffix V25)**
For applications where both valve seal overtravel and flow control are required. (Not available in 4" flange size).

## Closeoff Pressure

50 psi (3.5 bar) maximum

## Installation

V710(B) valve body mounts in any position directly to AH(E) Hydromotor Actuator.




## Approvals

**V710(B) valve with AH(E) Hydramotor**

UL listed to standard 429 "Electrically Operated Valves," Guide YIOZ, File MP932 Safety Valves

FM Approved to Class 7400 "liquid and gas safety shutoff valves."

CSA Certified to:

1. Automatic Gas Valves ANSI Z21.21 CSA 6.5, C/I, File 109157 and 113070.
2. Automatic Gas Safety Shutoff Valves (CGA 3.9), File 113070
3. Standard C22.2 No. 139, File 109157 and 113070

## Ordering Information

Important: Order by Catalog Number and add suffix number for desired optional feature. e.g. V710EBSV22

## Specifications (English units) - with AH2E Actuator Only

| Pipe Size (in) | Orifice Size (in) | Cv Flow Factor | Flow Capacity $ft^3/hr$ ① | Gas Capacity Btu/hr. ① | Operating Pressure Differential (psi) | | Fluid Temp.˚F | | Catalog Numbers | | Const. Ref. | Approx. Shipping Weight (lbs) |
|---|---|---|---|---|---|---|---|---|---|---|---|---|
| | | | | | Min. | Max. | Min. | Max. | Quick Opening Trim | Quick Opening w/Valve Seal Overtravel Trim | | |
| **COMBUSTION (Fuel Gas) - Normally Closed** | | | | | | | | | | | | |
| 3/4 | 1 5/8 | 14 | 755 | 754,900 | 0 | 15 | -40 | 150 | V710EBS | V710EBSV22 | 1 | 4.3 |
| 1 | 1 5/8 | 20 | 1,078 | 1,078,400 | 0 | 15 | -40 | 150 | V710FBS | V710FBSV22 | 1 | 4.2 |
| 1 1/4 | 2 3/32 | 44 | 2,353 | 2,353,000 | 0 | 15 | -40 | 150 | V710GBS | V710GBSV22 | 2 | 6.3 |
| 1 1/2 | 2 3/32 | 57 | 3,048 | 3,048,000 | 0 | 15 | -40 | 150 | V710HBS | V710HBSV22 | 2 | 6.1 |
| 2 | 2 3/32 | 74 | 3,956 | 3,956,500 | 0 | 15 | -40 | 150 | V710JBS | V710JBSV22 | 2 | 5.8 |
| 2 (High Flow) | 3 | 91 | 4,906 | 4,906,800 | 0 | 15 | -40 | 150 | V710MBS | V710MBSV22 | 3 | 13.2 |
| 2 1/2 | 3 | 120 | 6,470 | 6,470,500 | 0 | 15 | -40 | 150 | V710KBS | V710KBSV22 | 3 | 12.7 |
| 3 | 3 | 160 | 8,627 | 8,627,300 | 0 | 15 | -40 | 150 | V710LBS | V710LBSV22 ② | 3 | 11.7 |
| 4 (Flange) | 4 | 180 | 10,200 | 10,200,000 | 0 | 15 | -40 | 150 | V710NCF | V710NCFV22 | 4 | 100 |

① 1" W.C. Drop @ 2" W.C. Inlet Pressure, 1,000 Btu/cu.ft. or more, 0.64 Specific Gravity Gas. ② Cv flow factor is 149.

## Specifications (Metric units) - with AH2E Actuator Only

| Pipe Size (in) | Orifice Size (mm) | Kv Flow Factor | Flow Capacity $m^3/hr$ ① | Gas Capacity Btu/hr. ① | Operating Pressure Differential (bar) | | Fluid Temp.˚C | | Catalog Numbers | | Const. Ref. | Approx. Shipping Weight (kgs) |
|---|---|---|---|---|---|---|---|---|---|---|---|---|
| | | | | | Min. | Max. | Min. | Max. | Quick Opening Trim | Quick Opening w/Valve Seal Overtravel Trim | | |
| **COMBUSTION (Fuel Gas) - Normally Closed** | | | | | | | | | | | | |
| 3/4 | 41 | 12.1 | 21 | 754,900 | 0 | 1 | -40 | 66 | V710EBS | V710EBSV22 | 1 | 2.0 |
| 1 | 41 | 17.3 | 31 | 1,078,400 | 0 | 1 | -40 | 66 | V710FBS | V710FBSV22 | 1 | 1.9 |
| 1 1/4 | 53 | 38 | 67 | 2,353,000 | 0 | 1 | -40 | 66 | V710GBS | V710GBSV22 | 2 | 2.9 |
| 1 1/2 | 53 | 49 | 86 | 3,048,000 | 0 | 1 | -40 | 66 | V710HBS | V710HBSV22 | 2 | 2.8 |
| 2 | 53 | 64 | 112 | 3,956,500 | 0 | 1 | -40 | 66 | V710JBS | V710JBSV22 | 2 | 2.6 |
| 2 (High Flow) | 76 | 79 | 139 | 4,906,800 | 0 | 1 | -40 | 66 | V710MBS | V710MBSV22 | 3 | 6.0 |
| 2 1/2 | 76 | 104 | 183 | 6,470,500 | 0 | 1 | -40 | 66 | V710KBS | V710KBSV22 | 3 | 5.8 |
| 3 | 76 | 138 | 244 | 8,627,300 | 0 | 1 | -40 | 66 | V710LBS | V710LBSV22 ② | 3 | 5.3 |
| 4 (Flange) | 102 | 156 | 289 | 10,200,000 | 0 | 1 | -40 | 66 | V710NCF | V710NCFV22 | 4 | 45.5 |

① 1" W.C. Drop @ 2" W.C. Inlet Pressure, 1,000 Btu/cu.ft. or more, 0.64 Specific Gravity Gas. ② Kv flow factor is 129.



### Trim Types

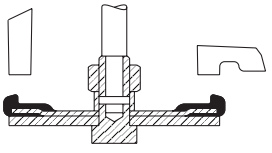

QUICK OPENING TRIM
(STANDARD)

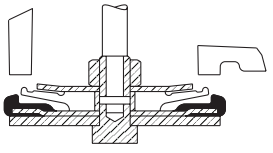

QUICK OPENING WITH
VALVE SEAL OVERTRAVEL TRIM
(SUFFIX V22)

## Specifications (English units) - with AH4E Actuator Only

| Pipe Size (in) | Orifice Size (in) | Cv Flow Factor | Flow Capacity $ft^3/hr$ ① | Gas Capacity Btu/hr. ① | Operating Pressure Differential (psi) | | Fluid Temp.˚F | | Catalog Numbers | | Const. Ref. | Approx. Shipping Weight (lbs) |
|---|---|---|---|---|---|---|---|---|---|---|---|---|
| | | | | | Min. | Max. | Min. | Max. | Linear Trim | Linear w/Valve Seal Overtravel Trim | | |
| **COMBUSTION (Fuel Gas) - Normally Closed** | | | | | | | | | | | | |
| 3/4 | 1 5/8 | 13 | 695 | 695,100 | 0 | 15 | -40 | 150 | V710EBSV15 | V710EBSV25 | 1 | 4.3 |
| 1 | 1 5/8 | 19 | 1016 | 1,016,000 | 0 | 15 | -40 | 150 | V710FBSV15 | V710FBSV25 | 1 | 4.2 |
| 1 1/4 | 2 3/32 | 42 | 2246 | 2,246,000 | 0 | 15 | -40 | 150 | V710GBSV15 | V710GBSV25 | 2 | 6.3 |
| 1 1/2 | 2 3/32 | 52 | 2780 | 2,780,300 | 0 | 15 | -40 | 150 | V710HBSV15 | V710HBSV25 | 2 | 6.1 |
| 2 | 2 3/32 | 67 | 3582 | 3,582,300 | 0 | 15 | -40 | 150 | V710JBSV15 | V710JBSV25 | 2 | 5.8 |
| 2 (High Flow) | 3 | 88 | 4705 | 4,705,100 | 0 | 15 | -40 | 150 | V710MBSV15 | V710MBSV25 | 3 | 13.2 |
| 2 1/2 | 3 | 104 | 5561 | 5,561,000 | 0 | 15 | -40 | 150 | V710KBSV15 | V710KBSV25 | 3 | 12.7 |
| 3 | 3 | 128 | 6844 | 6,844,000 | 0 | 15 | -40 | 150 | V710LBSV15 | V710LBSV25 ② | 3 | 11.7 |
| 4 (Flange) | 4 | 180 | 10,200 | 10,200,000 | 0 | 15 | -40 | 150 | V710NCFSV15 | - | 4 | 100 |

① 1" W.C. Drop @ 2" W.C. Inlet Pressure, 1,000 Btu/cu.ft. or more, 0.64 Specific Gravity Gas. ② Cv flow factor is 124.

## Specifications (Metric units) - with AH4E Actuator Only

| Pipe Size (in) | Orifice Size (mm) | Kv Flow Factor | Flow Capacity $m^3/hr$ ① | Gas Capacity Btu/hr. ① | Operating Pressure Differential (bar) | | Fluid Temp.˚C | | Catalog Numbers | | Const. Ref. | Approx. Shipping Weight (kgs) |
|---|---|---|---|---|---|---|---|---|---|---|---|---|
| | | | | | Min. | Max. | Min. | Max. | Linear Trim | Linear w/Valve Seal Overtravel Trim | | |
| **COMBUSTION (Fuel Gas) - Normally Closed** | | | | | | | | | | | | |
| 3/4 | 41 | 11.3 | 20 | 695,100 | 0 | 1 | -40 | 66 | V710EBSV15 | V710EBSV25 | 1 | 2.0 |
| 1 | 41 | 16.4 | 29 | 1,016,000 | 0 | 1 | -40 | 66 | V710FBSV15 | V710FBSV25 | 1 | 1.9 |
| 1 1/4 | 53 | 36 | 64 | 2,246,000 | 0 | 1 | -40 | 66 | V710GBSV15 | V710GBSV25 | 2 | 2.9 |
| 1 1/2 | 53 | 45 | 79 | 2,780,300 | 0 | 1 | -40 | 66 | V710HBSV15 | V710HBSV25 | 2 | 2.8 |
| 2 | 53 | 58 | 101 | 3,582,300 | 0 | 1 | -40 | 66 | V710JBSV15 | V710JBSV25 | 2 | 2.6 |
| 2 (High Flow) | 76 | 76 | 133 | 4,705,100 | 0 | 1 | -40 | 66 | V710MBSV15 | V710MBSV25 | 3 | 6.0 |
| 2 1/2 | 76 | 90 | 157 | 5,561,000 | 0 | 1 | -40 | 66 | V710KBSV15 | V710KBSV25 | 3 | 5.8 |
| 3 | 76 | 111 | 194 | 6,844,000 | 0 | 1 | -40 | 66 | V710LBSV15 | V710LBSV25 ② | 3 | 5.3 |
| 4 (Flange) | 102 | 156 | 289 | 10,200,000 | 0 | 1 | -40 | 66 | V710NCFSV15 | - | 4 | 45.5 |

① 1" W.C. Drop @ 2" W.C. Inlet Pressure, 1,000 Btu/cu.ft. or more, 0.64 Specific Gravity Gas. ② Kv flow factor is 107.

### Trim Types

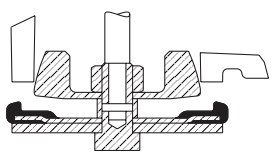

LINEAR TRIM
(SUFFIX V15)

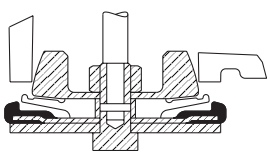

LINEAR WITH VALVE SEAL
OVERTRAVEL TRIM
(SUFFIX V25)

## Dimensions inches (mm)

| Const. Ref. | | A | B | C | D |
|---|---|---|---|---|---|
| 1 | in | 5.3 | 3.48 | 1.46 | 5.39 |
| | mm | 135 | 88 | 37 | 137 |
| 2 | in | 6.09 | 3.83 | 1.89 | 6.32 |
| | mm | 155 | 97 | 48 | 161 |
| 3 | in | 7.80 | 5.28 | 2.38 | 7.94 |
| | mm | 198 | 134 | 60 | 202 |
| 4 | in | 13.88 | 5 | 7.40 | 9 |
| | mm | 353 | 127 | 188 | 229 |

### Const. Ref. 1-3

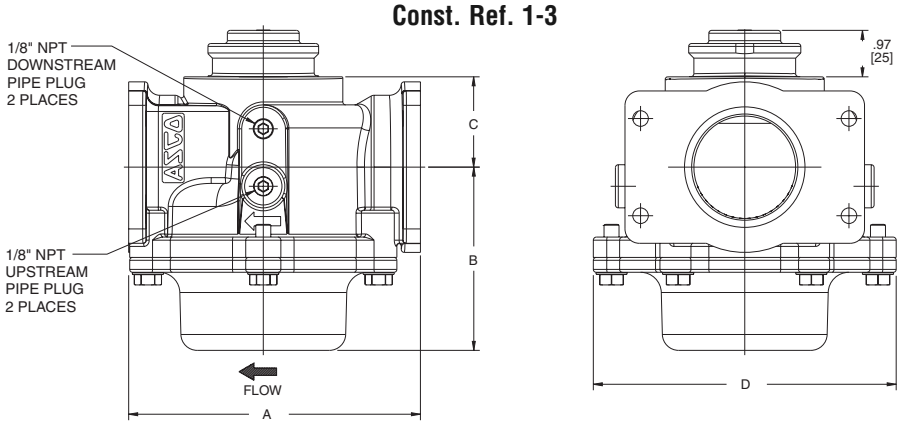


### Const. Ref. 4

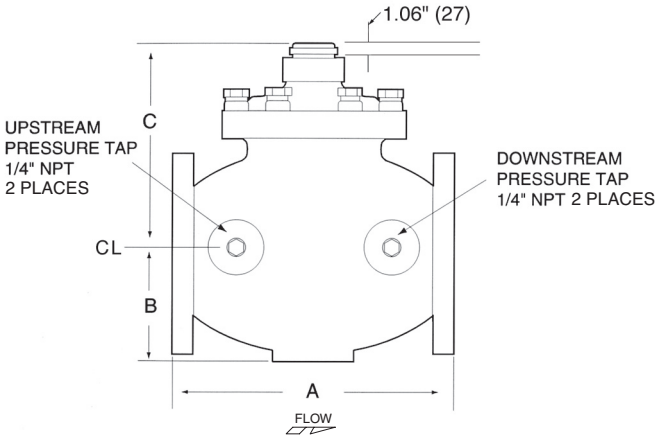


### Flange Adapters

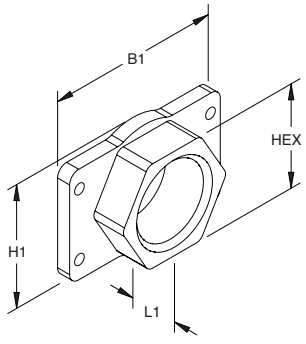


| Flange Adapters | | B1 | H1 | L1 | HEX |
|---|---|---|---|---|---|
| 3/4" - 1" | in | 4.8 | 2.5 | 1.27 | 2.5 |
| | mm | 122 | 76 | 32 | 64 |
| 1 1/4" - 2" | in | 5 | 3.56 | 1.38 | 3 |
| | mm | 127 | 90 | 35 | 76 |
| 2" (High Flow) - 3" | in | 7 | 4.5 | 2.015 | 4.5 |
| | mm | 178 | 114 | 51 | 114 |

### Flange Adapter Kits (Optional)*

| Pipe Size (in) | Inlet & Outlet Adapter/Hardware Kit |
|---|---|
| 3/4 | 296659-001 |
| 1 | 296659-002 |
| 1 1/4 | 296659-005 |
| 1 1/2 | 296659-006 |
| 2 | 296659-007 |
| 2 (High Flow) | 296659-008 |
| 2 1/2 | 296659-009 |
| 3 | 296659-010 |

** Please refer to the Double Gas Shutoff Valves catalog pages for more kit information.*

SIEMENS

# Technical Instructions

Document No. 155-751
SKP15…U..
November 1, 2005

# SKP Series

## SKP15…U.. Gas Valve Actuator with Safety Shutoff Function



ISO 9001 and 14000 REGISTERED FIRM
GAS0001R2
LISTED
APPROVED

Only when assembled to Series VG… Gas valves

### Description

SKP15… electro-hydraulic actuators are used in combination with VG… series gas valves to provide safety shut-off control for industrial and commercial burner applications.

The compact SKP15… actuator opens slowly and closes immediately when power is interrupted. The modular design allows the SKP15… to be used in combination with all VG… series gas valves bodies from 1/2-inch to 6 inches in size. The actuator is easily mounted on the square flange of any VG… valve with four pre-mounted screws. A visible position indicator on the front of the actuator displays the entire stroke of the valve. A light indicates when the actuator is powered.

### Features

- UL listed, FM approved, CSA certified for USA and Canada, IRI approvable, and ISO 9001 certified. European, Australian and Japanese approved versions available.
- Proof of Closure with Over Travel (POC) versions are available.
- Optional NEMA 4 protection.
- Visual position indication.
- "Power on" indication light
- Quick connect wiring terminals
- Optional adjustable auxiliary switch available.
- Modular design with $360^{o}$ actuator rotation for easy field wiring and installation.
- Low, 13.5 VA power consumption.

### Application

SKP15… series actuators are combined with 1/2-inch to 6-inch VG… series gas valve bodies. VG… series gas valves must be ordered separately (See *VG…U... Technical Instructions*, P/N 155-512P25).

## Product Numbers

**Table 1.**

| Product Number[1] | Operating Voltage | Proof of Closure Switch [2] | Auxiliary Switch [2] | Type of Switch |
|---|---|---|---|---|
| SKP15.013U1 | 110 to 120 Vac | – | – | – |
| SKP15.012U1 | | X | X | SPDT SPDT |
| SKP15.011U1 | | X | – | SPDT |
| SKP15.013U2 | 220 to 240 Vac | – | – | – |
| SKP15.012U2 | | X | X | SPDT SPDT |

**Note**:

1. European, CE certified models are available (see *data sheet 7643*)
2. Proof of closure and auxiliary switches cannot be field installed.

## Accessories

AGA66 Sealing gasket to provide NEMA 3, 3R, and 4 protection (for VGG…/VGD…valves)

| | | |
|---|---|---|
| **Specifications**<br>Agency approvals | As safety shut-off valve | UL/429, FM/7400, ANSI Z21.21/CGA6.5 C/I<br>Agency marks apply only for SKPxx.xxxU actuators with VGxxx.xxxU series gas valve bodies. |
| Power supply | Operating voltage | 110 to 120 Vac + 10% to -15%<br>220 to 240 Vac + 10% to -15% |
| | Operating frequency | 50 to 60 Hz ± 6% |
| | Power consumption | 13.5 VA |
| | Duty cycle | continuous |
| Operating environment | Ambient operating temperature | 5°F to 140°F (–15°C to 60°C) |
| | Mounting position | Any position except upside down |
| Physical characteristics | Weight | 2.4 lb (1.1 kg) |
| | Enclosure | NEMA 1, 2, 5, and 12 for indoor use<br>NEMA 3, 3R, and 4 with optional AGA66 gasket |
| | Dimensions | See Figure 3 |
| | Specification for valve bodies | See *gas valve Technical Instructions,* P/N 155-512P25 |
| | Conduit connection | Two 1/2-inch NPSM threaded knock-outs |
| | Electrical connection | Spring loaded terminals for 14 AWG wires |
| Operating characteristics | Output force | 100 lb (450 N) |
| | Maximum stroke | 1 inch (26 mm) |
| | Opening time for maximum stroke | Varies with valve size, 14 seconds for max. stroke |
| | Closing time | <0.8 seconds |
| Auxiliary features | Proof of closure switch | Non-adjustable |
| | Setting range of auxiliary switch | 40% to 100% of stroke |
| | Switch rating | 6A/250 Vac resistive; 3A/120 Vac pilot duty |

## Operation

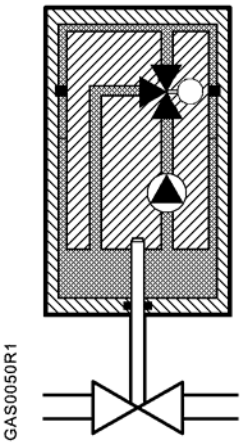


**Figure 1. SKP15… Operation.**

The electro-hydraulic actuator consists of a cylinder filled with oil, a piston containing an electric oscillating pump, and a relief system. When power is supplied to the actuator, the relief system closes, and the pump moves oil from the reservoir into the pressure chamber. This action causes the piston to move downward in the cylinder, opening the gas valve. When power to the actuator is interrupted, the relief system opens and the gas valve closes in less than 0.8 seconds.

A position indicator, visible through the transparent portion of the terminal cover, shows the entire stroke range of the actuator. A light, which is visible through the lower left transparent portion of the terminal cover, indicates when the actuator receives power. An optional, non-adjustable SPDT proof of closure over travel switch signals the closed position after the gas valve has closed. An optional SPDT auxiliary switch is adjustable between 40% and 100% of the stroke. The adjustment screw and scale are located on the right side in the terminal box, and are visible through the transparent portion of the terminal cover.

## Installation

**WARNING:**

- Personal injury or loss of life may occur if procedures are not followed as specified.
- All installations must be performed by qualified personnel only.
- Do not pull the actuator shaft.
- The AGA66 gasket must be installed between the actuator and the gas valve body to provide NEMA 3, 3R, and 4 protection rating for VGG… and VGD… valves.

- The SKP15… actuator is directly coupled to the VG… series valve body by four pre-mounted 4 mm Allen key screws.
- The square mounting flange can be rotated in steps of $90^{o}$ to provide four different mounting positions. The SKP15… actuator can be mounted in any position except upside down.
- The actuator can be mounted or replaced while the valve body is under pressure.
- The SKP15… actuator has two knock-outs for the installation of 1/2”-14 NPSM conduit connections.
- When conduit routing is connected, flexible conduit must be used.
- Liquid tight conduit must be used in combination with AGA66 to provide NEMA 3, 3R, and 4 protection.
- The terminal marked GND, located above the wiring terminals, must be connected to the electrical ground.

## Installation, Continued

**NOTE:** Wiring must meet all relevant electrical codes.

## Wiring and Switch Adjustment

(See *Terminal Designations*)

- The actuator is equipped with spring-loaded terminals for 14 AWG wires.
- The actuator has two line and two neutral terminals.
- Insert one wire into the opening of the terminal while pressing the lever downward with a screwdriver or hard object. Make sure that all strands insert into the opening.
- Adjust the auxiliary switch (if provided) according to the wiring diagram on the label below the terminals (see Figure 2). The adjustment screw and scale are located on the right side of the terminal box, and are visible through the transparent portion of the terminal cover.

**NOTES**:
1. The auxiliary switch is adjustable between 40% and 100% of the stroke. The factory setting is at 40%.
2. The auxiliary switch must not be used for proof of closure detection or other safety interlock functions.
3. The Proof of Closure Switch is non-adjustable.

## Service

There are no serviceable parts on the SKP15… series actuators. If inoperative, replace the entire actuator. Tag wires before servicing.

## Terminal Designations

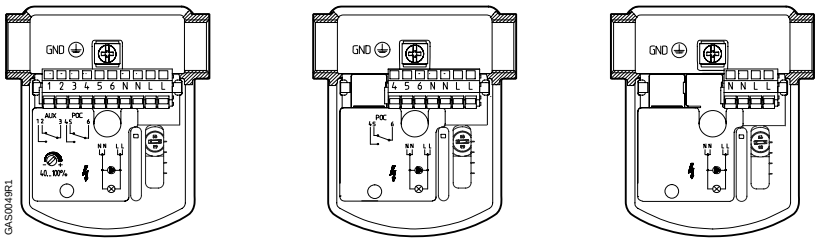


SKP15.012U… SKP15.011U… SKP15.013U…

**Figure 2. Terminal Designations.**

## Dimensions

(Dimensions in inches; millimeters in parentheses)

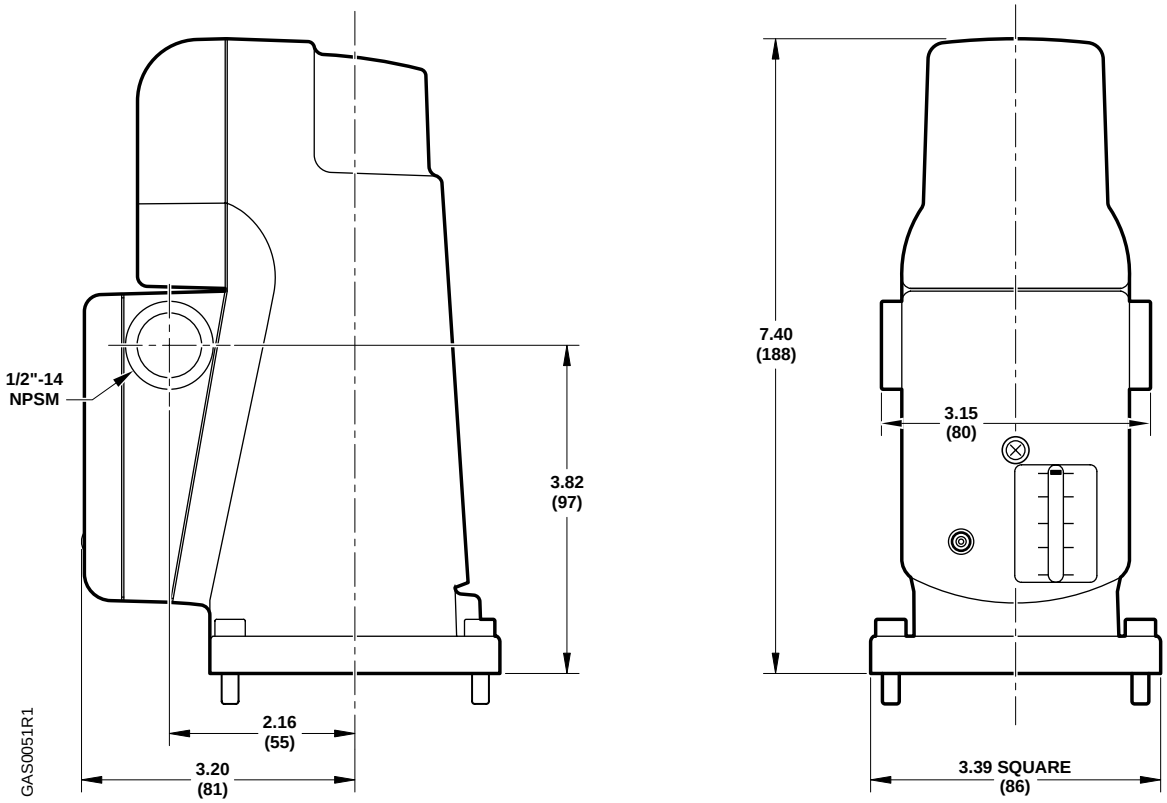


**Figure 3. SKP15…U.. Dimensions.**

Information in this publication is based on current specifications. The company reserves the right to make changes in specifications and models as design improvements are introduced. Other product or company names mentioned herein may be the trademarks of their respective owners.
© 2005 Siemens Building Technologies, Inc.

SIEMENS

# Technical Instructions

Document No. 155-751
SKP15…U..
July 9, 2014

# SKP Series

## SKP15…U.. Gas Valve Actuator with Safety Shutoff Function



ISO 9001 and 14000 REGISTERED FIRM

LISTED

APPROVED

Only when assembled to Series VG…U Gas valves

### Description

SKP15… electro-hydraulic actuators combine with VG… series gas valves to provide safety shut-off control for industrial and commercial burner applications.

The compact SKP15… actuator opens slowly and closes immediately when power is interrupted. The modular design allows the SKP15… to be used in combination with all VG… series gas valves bodies from 1/2-inch to 6 inches in size. The actuator easily mounts on the square flange of any VG… valve with four pre-mounted screws. A visible position indicator on the front of the actuator displays the entire stroke of the valve. A light indicates when the actuator is powered.

### Features

- UL listed, FM approved, CSA certified for USA and Canada, and ISO 9001 certified. European, Australian and Japanese approved versions available.
- Proof of Closure with Over Travel (POC) versions.
- Optional NEMA 4 protection.
- Visual position indication.
- "Power on" indication light
- Quick connect wiring terminals
- Optional adjustable auxiliary switch available.
- Modular design with 360$^{o}$ actuator rotation for easy field wiring and installation.
- Low, 13.5 VA power consumption.

### Application

SKP15… series actuators are combined with 1/2-inch to 6-inch VG… series gas valve bodies. VG… series gas valves must be ordered separately (See *VG…U... Technical Instructions*, P/N 155-512P25).

## Product Numbers

**Table 1.**

| Product Number[1] | Operating Voltage | Proof of Closure Switch [2] | Auxiliary Switch [2] | Type of Switch |
|---|---|---|---|---|
| SKP15.013U1 | 110 to 120 Vac | – | – | – |
| SKP15.012U1 | | X | X | SPDT SPDT |
| SKP15.011U1 | | X | – | SPDT |
| SKP15.013U2 | 220 to 240 Vac | – | – | – |
| SKP15.012U2 | | X | X | SPDT SPDT |

**Note**:

1. European, CE certified models are available (see *data sheet 7643*)
2. Proof of closure and auxiliary switches cannot be field installed.

## Accessories

AGA66 Sealing gasket to provide NEMA 3, 3R, and 4 protection (for VGG…/VGD…valves)

| **Specifications** | | |
|---|---|---|
| Agency approvals | As safety shut-off valve | UL/429, FM/7400, ANSI Z21.21/CGA6.5 C/I<br>Agency marks apply only for SKPxx.xxxU actuators with VGxxx.xxxU series gas valve bodies. |
| Power supply | Operating voltage | 110 to 120 Vac + 10% to -15%<br>220 to 240 Vac + 10% to -15% |
| | Operating frequency | 50 to 60 Hz ± 6% |
| | Power consumption | 13.5 VA |
| | Duty cycle | continuous |
| Operating environment | Ambient operating temperature | 5°F to 140°F (–15°C to 60°C) |
| | Mounting position | Any position except upside down |
| Physical characteristics | Weight | 2.4 lb (1.1 kg) |
| | Enclosure | NEMA 1, 2, 5, and 12 for indoor use<br>NEMA 3, 3R, and 4 with optional AGA66 gasket |
| | Dimensions | See Figure 3 |
| | Specification for valve bodies | See *gas valve Technical Instructions,* P/N 155-512P25 |
| | Conduit connection | Two 1/2-inch NPSM threaded knock-outs |
| | Electrical connection | Spring loaded terminals for 14 AWG wires |
| Operating characteristics | Output force | 100 lb (450 N) |
| | Maximum stroke | 1 inch (26 mm) |
| | Opening time for maximum stroke | Varies with valve size, 14 seconds for max. stroke |
| | Closing time | <0.8 seconds |
| Auxiliary features | Proof of closure switch | Non-adjustable |
| | Setting range of auxiliary switch | 40% to 100% of stroke |
| | Switch rating | 6A/250 Vac resistive; 3A/120 Vac pilot duty |

## Operation

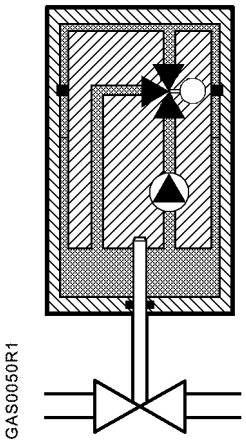


**Figure 1. SKP15… Operation.**

The electro-hydraulic actuator consists of a cylinder filled with oil, a piston containing an electric oscillating pump, and a relief system. When power is supplied to the actuator, the relief system closes, and the pump moves oil from the reservoir into the pressure chamber. This action causes the piston to move downward in the cylinder, opening the gas valve. When power to the actuator is interrupted, the relief system opens and the gas valve closes in less than 0.8 seconds.

A position indicator, visible through the transparent portion of the terminal cover, shows the entire stroke range of the actuator. A light, which is visible through the lower left transparent portion of the terminal cover, indicates when the actuator receives power. An optional, non-adjustable SPDT proof of closure over travel switch signals the closed position after the gas valve has closed. An optional SPDT auxiliary switch is adjustable between 40% and 100% of the stroke. The adjustment screw and scale are located on the right side in the terminal box, and are visible through the transparent portion of the terminal cover.

## Installation

**WARNING:**

- Personal injury or loss of life may occur if procedures are not followed as specified.
- All installations must be performed by qualified personnel only.
- Do not pull the actuator shaft.
- The AGA66 gasket must be installed between the actuator and the gas valve body to provide NEMA 3, 3R, and 4 protection rating for VGG… and VGD… valves.

- The SKP15… actuator is directly coupled to the VG… series valve body by four pre-mounted 4 mm Allen key screws.
- The square mounting flange can be rotated in steps of 90° to provide four different mounting positions. The SKP15… actuator can be mounted in any position except upside down.
- The actuator can be mounted or replaced while the valve body is under pressure.
- The SKP15… actuator has two knock-outs for the installation of 1/2”-14 NPSM conduit connections.
- When conduit routing is connected, flexible conduit must be used.
- Liquid tight conduit must be used in combination with AGA66 to provide NEMA 3, 3R, and 4 protection.
- The terminal marked GND, located above the wiring terminals, must be connected to the electrical ground.

## Installation, Continued

**NOTE:** Wiring must meet all relevant electrical codes.

## Wiring and Switch Adjustment

(See *Terminal Designations*)

- The actuator is equipped with spring-loaded terminals for 14 AWG wires.
- The actuator has two line and two neutral terminals.
- Insert one wire into the opening of the terminal while pressing the lever downward with a screwdriver or hard object. Make sure that all strands insert into the opening.
- Adjust the auxiliary switch (if provided) according to the wiring diagram on the label below the terminals (see Figure 2). The adjustment screw and scale are located on the right side of the terminal box, and are visible through the transparent portion of the terminal cover.

**NOTES**:
1. The auxiliary switch is adjustable between 40% and 100% of the stroke. The factory setting is at 40%.
2. The auxiliary switch must not be used for proof of closure detection or other safety interlock functions.
3. The Proof of Closure Switch is non-adjustable.

## Service

There are no serviceable parts on the SKP15… series actuators. If inoperative, replace the entire actuator. Tag wires before servicing.

## Terminal Designations

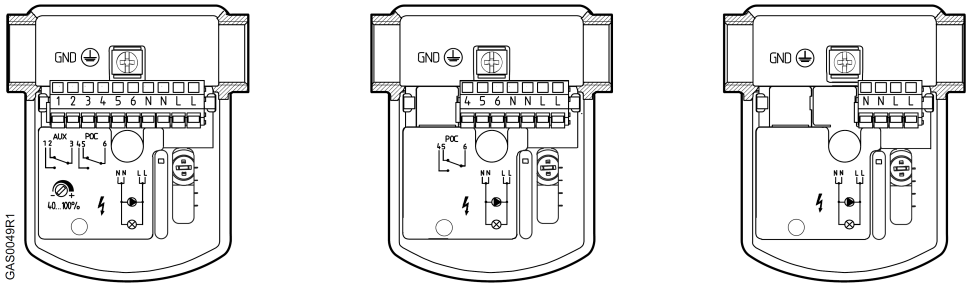


SKP15.012U… SKP15.011U… SKP15.013U…

**Figure 2. Terminal Designations.**

## Dimensions

(Dimensions in inches; millimeters in brackets)

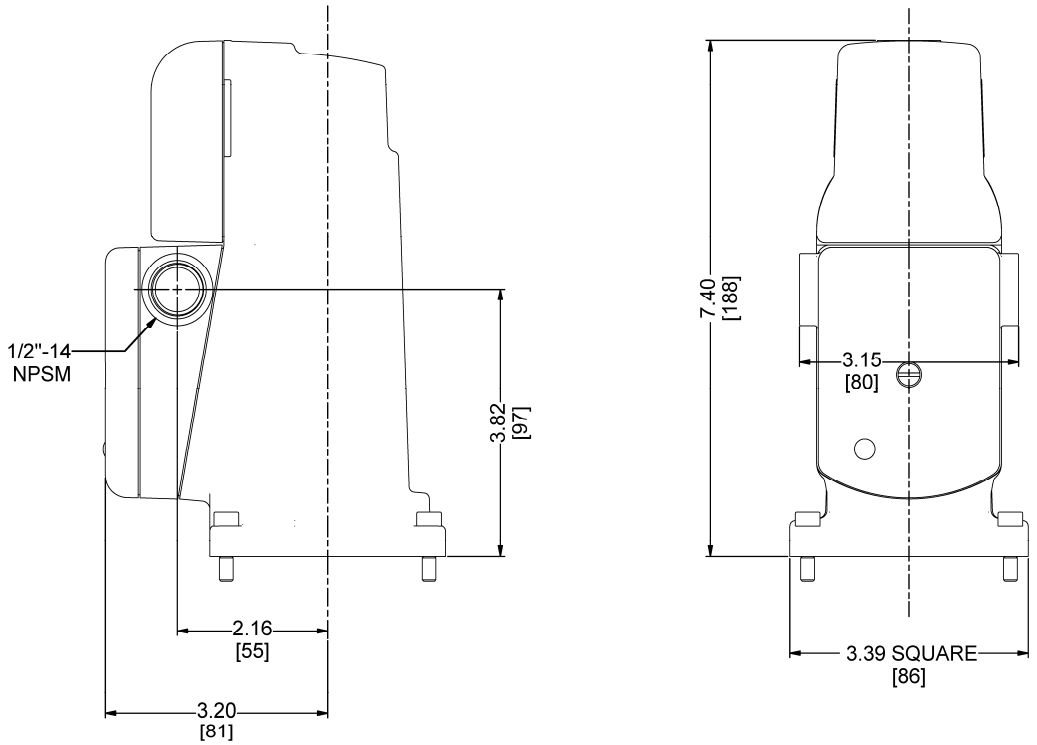


**Figure 3. SKP15…U.. Dimensions.**

Information in this publication is based on current specifications. The company reserves the right to make changes in specifications and models as design improvements are introduced. Other product or company names mentioned herein may be the trademarks of their respective owners.
© 2005 Siemens Building Technologies, Inc.

# Pressure Switch for gas and air

## GAO-A4…
## GMH-A4…
## GML-A4…

DUNGS®
Combustion Controls

**UL Listed**
- UL 353
- File # MH 16628

**CSA Certified**
- CSA C22.2 No. LR 53222
- Certification file # 201527

**FM Approved**
- Class 3510, 3530
- File # J.I. 1Y919.AF

**Commonwealth of Massachusetts Approved Product**
- Approval code G3-0106-191
- Gas pressure switch

**Codes and Standards**
This product is intended for installations covered by but not limited to NFPA 85, NFPA 86, UL 795, CSD-1, ANSI Z83.4, ANSI Z83.18, ANSI Z21.13, CSA B149.1, CSA B149.3 and CSA B149.6.

**DUNGS is an ISO 9001 manufacturing facility.**




**Description**
The GAO-, GMH- and GML-A4… ventless pressure switches are adjustable pressure switches for automatic burner controls.

These pressure switches are suitable for making and/or breaking a circuit when the medium pressure changes relative to the set point. The set point can be set in the field by an adjustable dial with an integrated scale. Test nipple integrated in metal housing to verify set point.

**Application**
The GAO-, GMH-, and GML-A4… pressure switch is recommended for industrial and commercial heating, ventilation and air-conditioning systems.

The GAO-, GMH-, and GML-A4… pressure switch is suitable for dry natural gas, propane, butane, air and other inert gases. Suitable for up to 0.1 % by volume, dry $H_2S$.

A “dry” gas has a dew point lower than +15 °F and its relative humidity is less than 60 %.

**GAO-A4…** SPDT pressure switch requires no auxiliary power. The GAO-A4… is suitable for making and/or breaking a circuit when the set point is exceeded or undershot. A tripped switch is indicated by a neon light after set point is exceeded or undershot. Automatic reset when pressure returns below or above set point.

**GMH-A4…** SPDT pressure switch requires no auxiliary power. The GMH-A4… is suitable for making and/or breaking a circuit when the set point is exceeded. A tripped switch is indicated by a neon light after set point is exceeded. Manual reset is required to reset the switch.

**GML-A4**… SPDT pressure switch requires no auxiliary power. The GML-A4… is suitable for making and/or breaking a circuit when the set point is undershot. A tripped switch is indicated by a neon light after set point is undershot. Manual reset is required to reset the switch.

**Specifications**

| | | |
|---|---|---|
| Max. operating pressure | GAO-A4-4-2,3,5,6 | 7 PSI (500mbar) |
| | GMH- and GML-A4-4-4,6 | 7 PSI (500mbar) |
| | GAO-, GMH- and GML-A4-4-8 | 14 PSI (1000 mbar) |
| Max. body pressure | 15 PSI (1033 mbar) | |
| Pressure connection | Standard: 1/4" NPT female thread centered underside of housing. | |
| Temperature range: | | |
| GAO-, GMH- and GML-A4-4 | Ambient temperature | -40 °F to +140 °F (-40 °C to +60 °C) |
| | Medium temperature | -40 °F to +140 °F (-40 °C to +60 °C) |
| GAO-, GMH- and GML-A4-4-8 | Ambient temperature | -22 °F to +140 °F (-30 °C to +60 °C) |
| | Medium temperature | -22 °F to +140 °F (-30 °C to +60 °C) |
| Materials | Housing | Aluminium |
| | Switch | Polycarbonate |
| | Diaphragm | NBR-based rubber |
| | Switching contact | Silver or Gold |
| Electrical ratings | AC eff. | min. 24 V max. 240 V |
| | DC | min. 24 V max. 48 V |
| Nominal current | Silver (Ag) contact ratings | Gold (Au) contact ratings |
| | AC 10 A resistive @ 120 VAC | |
| | AC 8 A inductive @ 120 VAC | |
| | DC min. 20 mA @ 24 VDC | DC max. 5 mA @ 5 VDC |
| | DC max. 1 A @ 24 VDC & 48 VDC | DC max. 20 mA @ 24 VDC |
| Indication light | 0.30 W energy consumption | |
| Electrical connection | Screw terminals via 1/2" NPT conduit connection | |
| Enclosure rating | NEMA Type 4 | |
| Setting tolerance | ±15% switching point deviation referred to set point. Adjusted as pressure rises or as pressure falls, vertical diaphragm position. | |
| Vent Limiter | Incorporates a vent limiter as per UL 353 and limits the escape of gas less than 1.0 CFH of natural gas at 7 PSI if internal switch diaphragm ruptures | |

**Dimensions inch (mm)**
**GAO-, GMH-, GML-A4…**

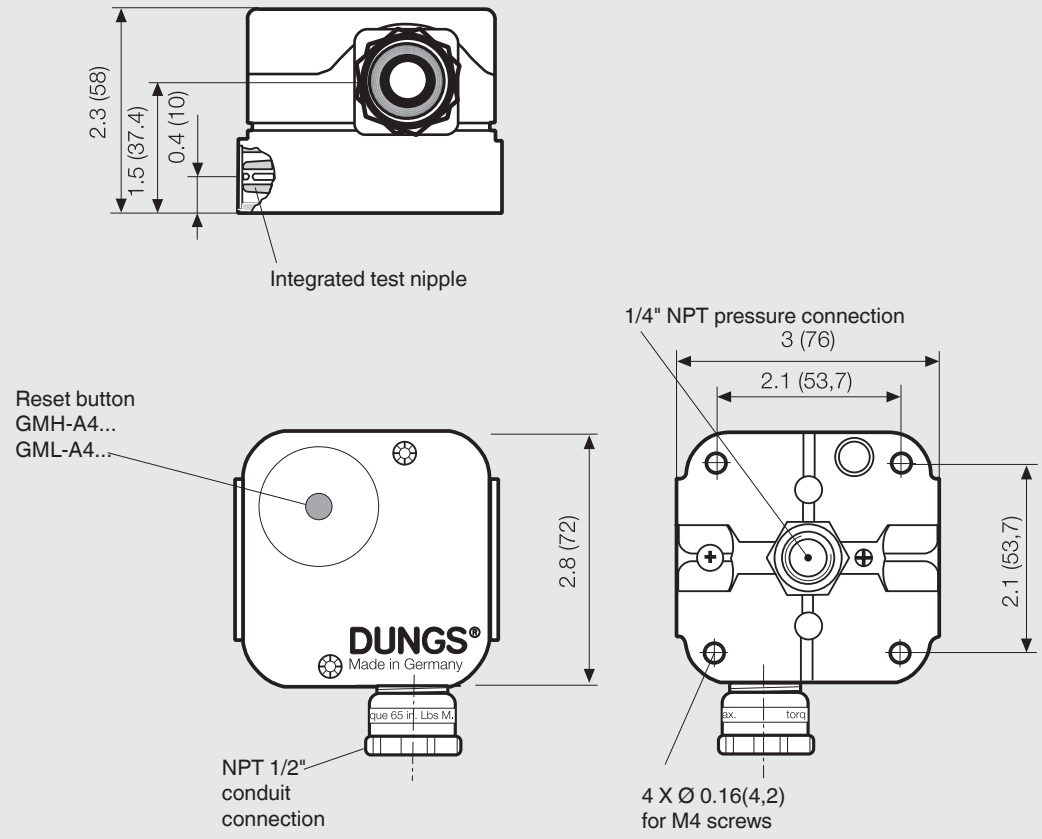


| Adapters / Replacement parts / Accessories | Order No. | For equipment | Notes |
|---|---|---|---|
| Replacement conduit adapter | 220-566 | GAO, GMH, GML | 1/2" NPT |
| Replacement cover | 228-732 | GAO | |
| Replacement cover | 233-113 | GMH, GML | |
| Replacement light | 244-156 | GAO, GMH, GML | 120 VAC, yellow bulb |
| Replacement light | 248-240 | GAO, GMH, GML | 24 VAC/VDC, green bulb |
| Replacement light | 244-157 | GAO, GMH, GML<br>Gold contact versions | 24 VAC/VDC, yellow blulb |
| Replacement conduit adapter | 220-566 | GAO, GMH, GML | Pg 11 to 1/2" NPT adapter |
| Replacement conduit adapter | 240-671 | GAO, GMH, GML | M20 to 1/2" NPT adapter |
| Electrical plug for A4<br>(For usw with 210-318) | 219-659 | GAO | |
| Electrical plug for A4<br>(For usw with 210-318) | 227-644 | GMH, GML | |
| DIN connector for A4<br>(For use with 219-659 or 227-644) | 210-318 | GAO, GMH, GML | |

**Definition of switching hysteresis Δp**

The pressure difference between the upper and lower switching pressures

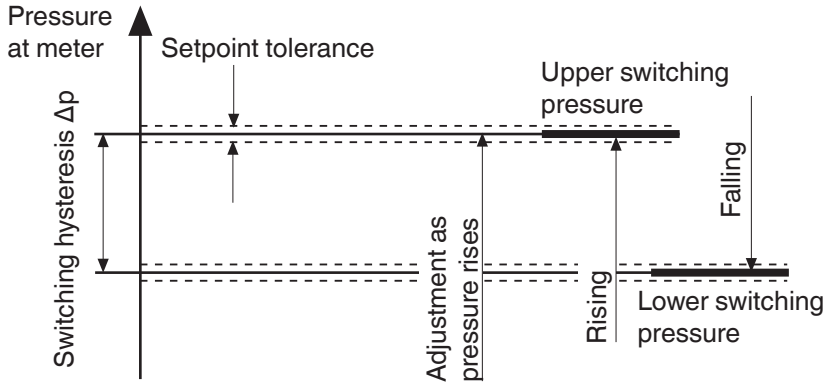


**GAO (Shown as a high gas limit)**

**As pressure rises** above set point, 1 NC opens, 2 NO closes, Neon light ON (fault). **As pressure falls** below setpoint, switch resets: 1 NC closes and 2 NO opens, Neon light off.

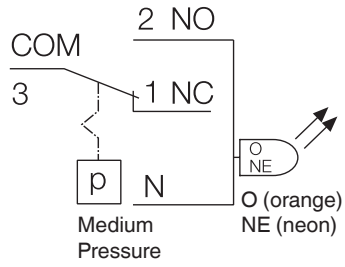


**GMH (Operating state shown)**

**As pressure rises**, 2 NO closes, 1 NC opens, and Neon light ON (fault), switch trips and locks out.

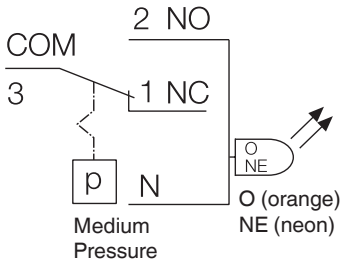


**GML** (**Operating state shown)**

**As pressure falls**, 2 NO opens, 1 NC closes, Neon light ON (fault), switch trips and locks out.

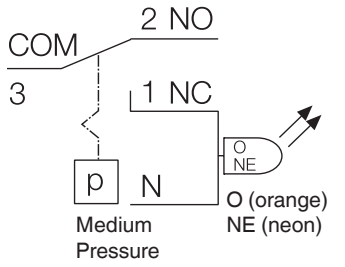

## Installation position

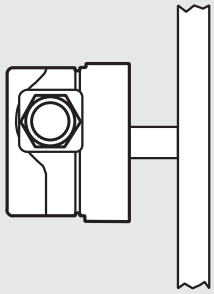

**Standard installation position**

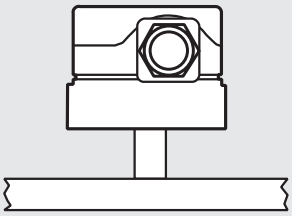

**When installed horizontally, the pressure switch switches at a pressure higher by approximately 0.2 in. W.C. (0.5 mbar).**

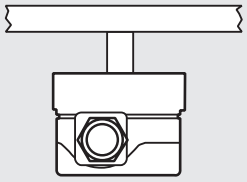

**When installed upside down, the pressure switch switches at a pressure lower by approximately 0.2 in. W.C. (0.5 mbar).**

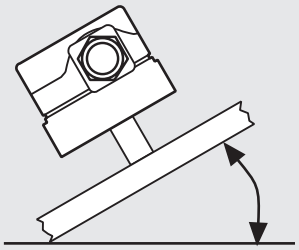

**When installed in other position the pressure switch switches at pressure deviating from the set reference value by max. ±0.2 in. W.C. (0.5 mbar).**

**⚠ NOTE: Always calibrate the switch in the desired mounting position**

**Pressure Switch**
**for gas and air**

**GAO-A4…**
**GMH-A4…**
**GML-A4…**

DUNGS®
Combustion Controls

| Type | Version | Order No. | Setting range in. W.C. | Switching hysteresis in. W.C. | Factory Calibration |
|---|---|---|---|---|---|
| **GAO-A4… pressure switch** | GAO-A4-4-2 | 217-090A | 0.16 - 1.20 | ≤ 0.12 |  |
| | GAO-A4-4-3 | 217-091A | 0.40 - 4.00 | ≤ 0.20 | |
| | GAO-A4-4-5 | 217-092A | 2.00 - 20.00 | ≤ 0.40 | |
| | GAO-A4-4-6 | 217-093A | 12.00 - 60.00 | ≤ 1.2 | |
| | GAO-A4-4-8 | 217-094A | 40.00 - 200.00 | ≤ 4.0 | |
| | GAO-A4-4-2 Gold | 223-525A | 0.16 - 1.20 | ≤ 0.12 | |
| | GAO-A4-4-3 Gold | 222-267A | 0.40 - 4.00 | ≤ 0.20 | |
| | GAO-A4-4-5 Gold | 222-268A | 2.00 - 20.00 | ≤ 0.40 | |
| | GAO-A4-4-6 Gold | 222-269A | 12.00 - 60.00 | ≤ 1.2 | |
| | GAO-A4-4-8 Gold | 223-526A | 40.00 - 200.00 | ≤ 4.0 | |
| **GMH-A4… pressure switch** | GMH-A4-4-4 | 217-326A | 1.00 - 20.00 | -- |  |
| | GMH-A4-4-6 | 217-327A | 12.00 - 60.00 | -- | |
| | GMH-A4-4-8 | 217-328A | 40.00 - 200.00 | -- | |
| | GMH-A4-4-4 Gold | 222-270A | 1.00 - 20.00 | | |
| | GMH-A4-4-6 Gold | 222-271A | 12.00 - 60.00 | | |
| **GML-A4… pressure switch** | GML-A4-4-4 | 217-340A | 1.00 - 20.00 | -- |  |
| | GML-A4-4-6 | 217-341A | 12.00 - 60.00 | -- | |
| | GML-A4-4-8 | 217-342A | 40.00 - 200.00 | -- | |
| | GML-A4-4-4 Gold | 222-272A | 1.00 - 20.00 | | |

**All switches with Silver contacts have 120 VAC neon lights factory installed**
**All switches with Gold contacts have 24 V lights factory installed**

| Accessories for pressure switch | Order No. |
|---|---|
| Replacement cover (screws not included) | 228-732 (for GAO switches) and 233-113 (for GMH and GML switches) |
| Screw for replacement cover | 237-675 |
| PG 11 - 1/2" NPT conduit adapter | 220-566 |
| M 20 - 1/2" NPT conduit adapter | 240-671 |
| 120 VAC neon light (orange) | 244-156 |
| 24 VAC/VDC light (orange) | 244-157 |
| 24 VAC/VDC light (green) | 248-240 |
| DIN connector (female plug) | 210-318 |
| Male plug for DIN connector | 219-659 (for GAO switches) and 227-644 (for GMH and GML switches) |

We reserve the right to make any changes in the interest of technical progress.

**Offered By:**
Burnerparts.com
BurnerParts.com
2011 Williamsburg Road Richmond, Virginia 23231
Tel: 804-236-3881 Fax: 804-236-3882 www.burnerparts.com

SIEMENS

**Technical Instructions**
Document No. 155-512P25
VG…
August 11, 2005

# VG Series

## VGG… and VGD… Gas Valves for use with SKP… Electro-hydraulic Actuators

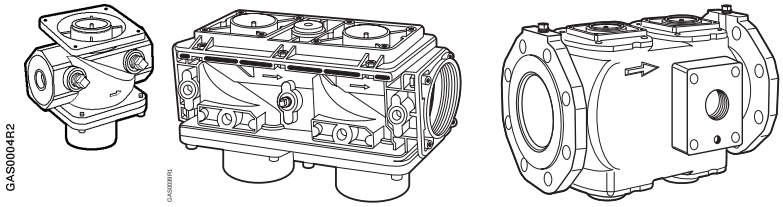


**VGG…** **VGD20…** **VGD40…**

ISO 9001 and 14000 REGISTERED FIRM

GAS0001H2

UL LISTED

FM APPROVED

Only when assembled to SKP… Series actuators

### Description

The normally closed VG… Series of modular single and double-body gas valves combined with SKP… Series electro-hydraulic actuators provide safety shut-off, gas pressure regulation and air/gas ratio control for commercial and industrial gas burners.

**Table 1. Legend.**

| Model Numbers | Body Style | Connection |
|---|---|---|
| VGG… | Single | NPT Threaded |
| VGD… | Double | NPT Threaded or ANSI Flanged |

### Features

**All Models**

- UL listed, FM approved, CSA certified, IRI approvable, ISO 9001 and 14000 certified. European, Australian and Japanese approved versions available.
- Stainless steel mesh inlet filter protects the valve seat(s) as well as downstream components.
- 1/4-inch NPT pressure taps on the inlet and outlet. (See Table 2 for details).
- Dual stem guides ensure precise disc alignment and tight shut-off.

**VGG… Models**

- Contoured valve disc provides smooth release of gas and stable regulating control.
- 3/4-inch NPT port for pilot or vent line connection on 2-1/2 and 3-inch VGG…valves.

**VGD20… Models**

- Compact VGD20… double-valve bodies consist of two safety shut-off valves in series. The first (inlet) valve has a flat valve disc applicable for safety shut-off function only. The second (outlet) valve has a contoured valve disc for use with pressure regulating actuators (SKP2…, SKP5…, SKP7…).
- A one-inch NPT vent connection between the valves.
- Each VGD20… double-valve requires two threaded mounting flanges (AGAxxU). Each flange includes the necessary installation hardware (bolts, nuts and O-ring). Each mounting flange has a 1/4-inch NPT pressure tap. The flanges can be pre-mounted onto the pipe, and then bolted onto the VGD20… gas valve body. This feature eliminates the use of pipe unions and permits the gas valve assembly to be easily removed from a gas train.
- The overall dimensions of both the 1-1/2-inch and 2-inch AGAxxU flanges are identical. This permits a 1-1/2-inch flange to be mounted on a 2-inch valve body or vice versa.

**NOTE:** VGD20… valves and AGAxxU threaded flanges must be ordered as separate items (See Table 2).

**VGD40… Models**

- Compact VGD40… double-valve bodies consist of two safety shut-off valves in series.
- Each individual safety shut-off valve has double seats to achieve high flow.
- Patented seat construction with individual closing spring for each seat to assure reliable shut-off and high close-off pressure rating.
- Full port vent line connection plates are available.

**NOTE:** VGD40… valves and AGA… vent connection plates must be ordered as separate items (See Table 2).

## Application

All VG… valves can be combined with any SKP… Series actuator. The actuator can be mounted while the valve is installed and under pressure.

SKP… regulating actuators are applicable for both low and high supply gas pressure applications, eliminating excessive regulator inventories. Maximum pressure ratings vary with valve size (See Table 2).

All VG… valves perform these functions in combination with each of the following actuators:

| | |
|---|---|
| SKP15… | Safety shut-off |
| SKP25… | Safety shut-off and constant pressure regulation or zero governor. |
| SKP55… | Safety shut-off, pressure regulation and differential pressure air/gas ratio control. |
| SKP75… | Safety shut-off, pressure regulation and adjustable air/gas ratio control. |

Since more than one function can be performed by a single valve, fewer components and fittings are required to assemble a gas train - significantly reducing both the size and weight of the gas train. In addition, smaller diameter gas valves can be used. For details on valve sizing see the Gas Flow Charts (Figures 4 and 5).



**CAUTION:**

Do not oversize valves equipped with a regulating SKP… actuator. Oversizing may limit turndown and could cause oscillations.

## Ordering Information

Gas valves and actuators are ordered separately. For additional SKP… actuator information, see the following Technical Instructions:

| | |
|---|---|
| SKP15… | 155-751P25 |
| SKP25… | 155-752P25 |
| SKP55… | 155-753P25 |
| SKP75… | 155-754P25 |

## Accessories

Manual adjusting throttle attachment AGA61 permits VG… series valves to be used as adjustable limiting orifice valves. Once adjusted, the AGA61 has a provision to be sealed from tampering (See Table 3).

Adapter plate AGA60 permits VG… series valves to be used for modulating flow control when fitted with an SQX… series modulating actuator (See Table 3).

**NOTE:** The VG… /SQX… valve/actuator combination is designed strictly for modulating flow control and does not provide safety shut-off function.

**Table 2. Product Numbers.**

| Product Number | Size | Maximum Operating Pressure psi | Close-off Pressure psi | Capacity CFH Natural Gas at ΔP=1" W.C. | Number of Test Points, 1/4" NPT | | 3/4" NPT Port | Valve Body Material |
|---|---|---|---|---|---|---|---|---|
| | | | | | Inlet | Outlet | | |
| VGG10.154U | 1/2" NPT | 20 | 75 | 327/242◆ | 2 | 2 | — | Aluminum |
| VGG10.204U | 3/4" NPT | 20 | 75 | 614/442◆ | 2 | 2 | — | Aluminum |
| VGG10.254U | 1" NPT | 20 | 75 | 914/686◆ | 2 | 2 | — | Aluminum |
| VGG10.404U | 1-1/2" NPT | 20 | 75 | 2,047/1,643◆ | 2 | 2 | — | Aluminum |
| VGG10.504U | 2" NPT | 15 | 75 | 3,511 | 2 | 2 | — | Aluminum |
| VGG10.654U | 2-1/2" NPT | 10 | 25 | 5,085 | 1 | 1 | 2-inlet | Cast Iron |
| VGG10.804U | 3" NPT | 10 | 25 | 6,158 | 1 | 1 | 2-inlet | Cast Iron |
| | | | | | | | | |
| *VGD20.403U | 1-1/2" | 20 | 30 | 1,890 | Two 1/4-inch and one 1-inch port between valves | | — | Aluminum |
| *VGD20.503U | 2" | 15 | 30 | 2,300 | | | — | Aluminum |
| | | | | | | | | |
| *AGA41U | Single 1-1/2" connecting flange with 1/4-inch port for VGD 20.403U | | | | | | Two (2) needed per valve. Order separately | |
| *AGA51U | Single 2" connecting flange with 1/4-inch port for VGD 20.503U | | | | | | | |
| | | | | | | | | |
| VGD40.065U | 2-1/2" NPT | 10 | 75 | 3,880 | 1 | 1 | Two 1/4-inch NPT ports between the valves | Aluminum |
| VGD40.080U | 3" NPT | 10 | 75 | 5,370 | 1 | 1 | | Aluminum |
| VGD40.100U | 4" Flanged | 10 | 30 | 9,680 | 1 | 1 | | Aluminum |
| VGD40.150U | 6" Flanged | 10 | 30 | 17,490 | 1 | 1 | | Aluminum |

* VGD20… double valves require 2 AGAxxU threaded flanges for installation.

◆ VGG… valves, 1/2- through 1-1/2 inch have reduced flow when used with AGA66 (NEMA 4 kit). Capacities shown are without/with NEMA 4 kit (See Figure 4a).

**Table 3. Accessories.**

| Part Number | Description | Notes |
|---|---|---|
| AGA40.6580U | Vent connection plate with 1-1/4" NPT vent connection and 1/4" NPT test port | Order separately. For use with VGD40… only. |
| AGA40.0100U | Vent connection plate with 2" NPT vent connection and 1/4" NPT test port | |
| AGA40.0150U | Vent connection plate with 2-1/2" NPT vent connection and 1/4" NPT test port | |
| | | |
| AGA60 | Adapter for use with SQX… actuators | |
| AGA61 | Manual operation kit, allows VG… valves to be used as adjustable limiting orifice valve. | |
| AGA66 | Sealing gasket to provide NEMA 3, NEMA 3R, and NEMA 4 protection. | |

## Specifications

| | | |
|---|---|---|
| **Approvals** | Agency approvals/standards | UL/429, FM/7400,<br>CSA/AINSI Z21.21/CGA 6.5 Commercial/Industrial<br>IRI approvable<br>Agency marks apply only for VGxxx.xxxU series gas valve bodies assembled with SKPxx.xxxU actuators. |
| **Operating Environment** | Maximum operating pressure | See Table 2 |
| | Maximum back pressure (differential) | 2.5 psi (150 mbar) |
| | Close-off pressure | See Table 2 |
| | Permissible gases | Natural gas, propane, butane, air, and other non-corrosive gases. |
| | Permissible gas temperature | 5°F to 140°F (-15°C to 60°C) |
| | Permissible operating temperature | 5°F to 140°F (-15°C to 60°C) |
| | Mounting | Any position except upside down |
| **Physical Characteristics** | Body materials | See Table 2 |
| | Weight | See Tables 4 through 7 |
| **Connections** | Pipe connections | NPT or ANSI Class 150 flange (See Table 2) |
| | Pressure and vent taps | See Table 2 |

## Operation

All VG… gas valves are normally closed, two-way valves. The valves have a standard, integral, stainless steel mesh filter (0.8 mm) in the inlet to protect the downstream components against contamination.

VGG… series gas valves have a contoured valve disc for stable regulating control and smooth release of gas (see Figure 1).

VGD20… double valves consist of two valves in series. The first (inlet) valve has a flat valve disc suitable for the safety shut-off function only. The second (outlet) valve has a contoured valve disc for stable regulating control and smooth release of gas (see Figure 2).

VGD40… double valves consist of two valves in series. Each valve has a double seat to achieve high flow (see Figure 3).

All valves have 1/4-inch NPT ports for pressure test connection. The 2-1/2-inch and 3-inch VGG… valves have an additional 3/4-inch NPT port for a pilot connection. The VGD20… valves have a 1-inch NPT port for a vent line connection. The VGD40… valves can be equipped with a full size vent connection plate.

See Table 1 for details on ports and vent connection plates.

## Operation, Continued

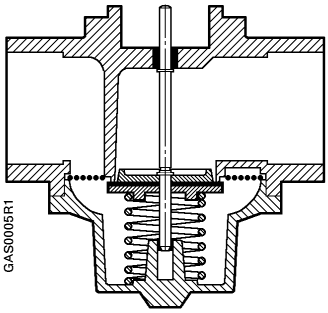


**Figure 1. VGG… Models.**

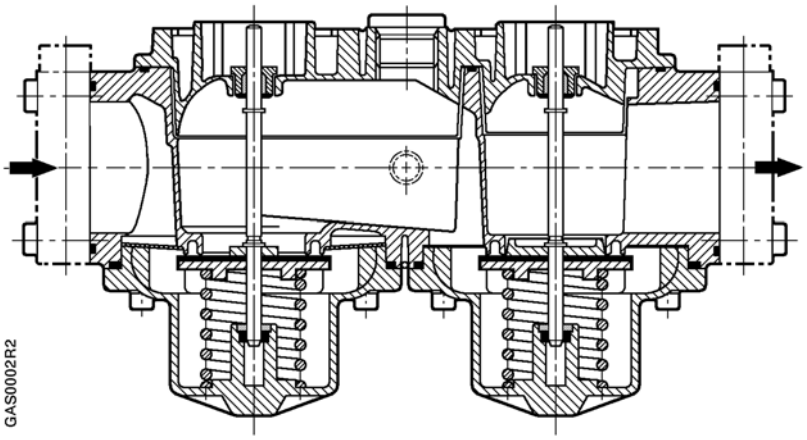


**Figure 2. VGD20… Models.**

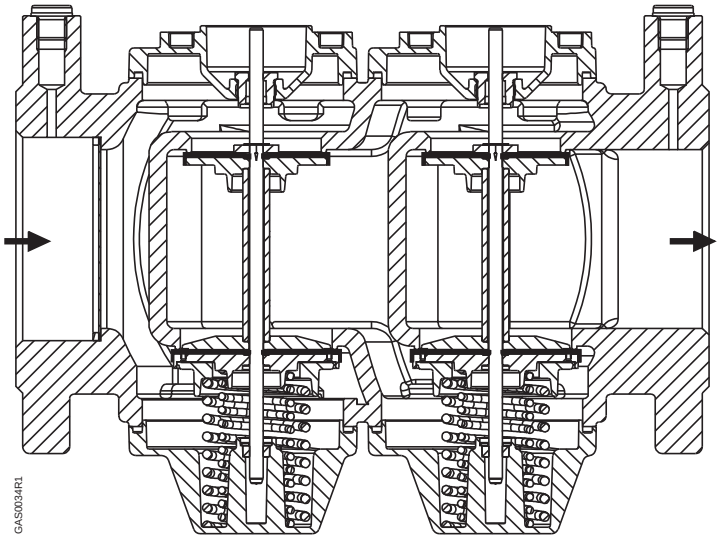


**Figure 3. VGD40… Models.**

## Gas Flow Charts

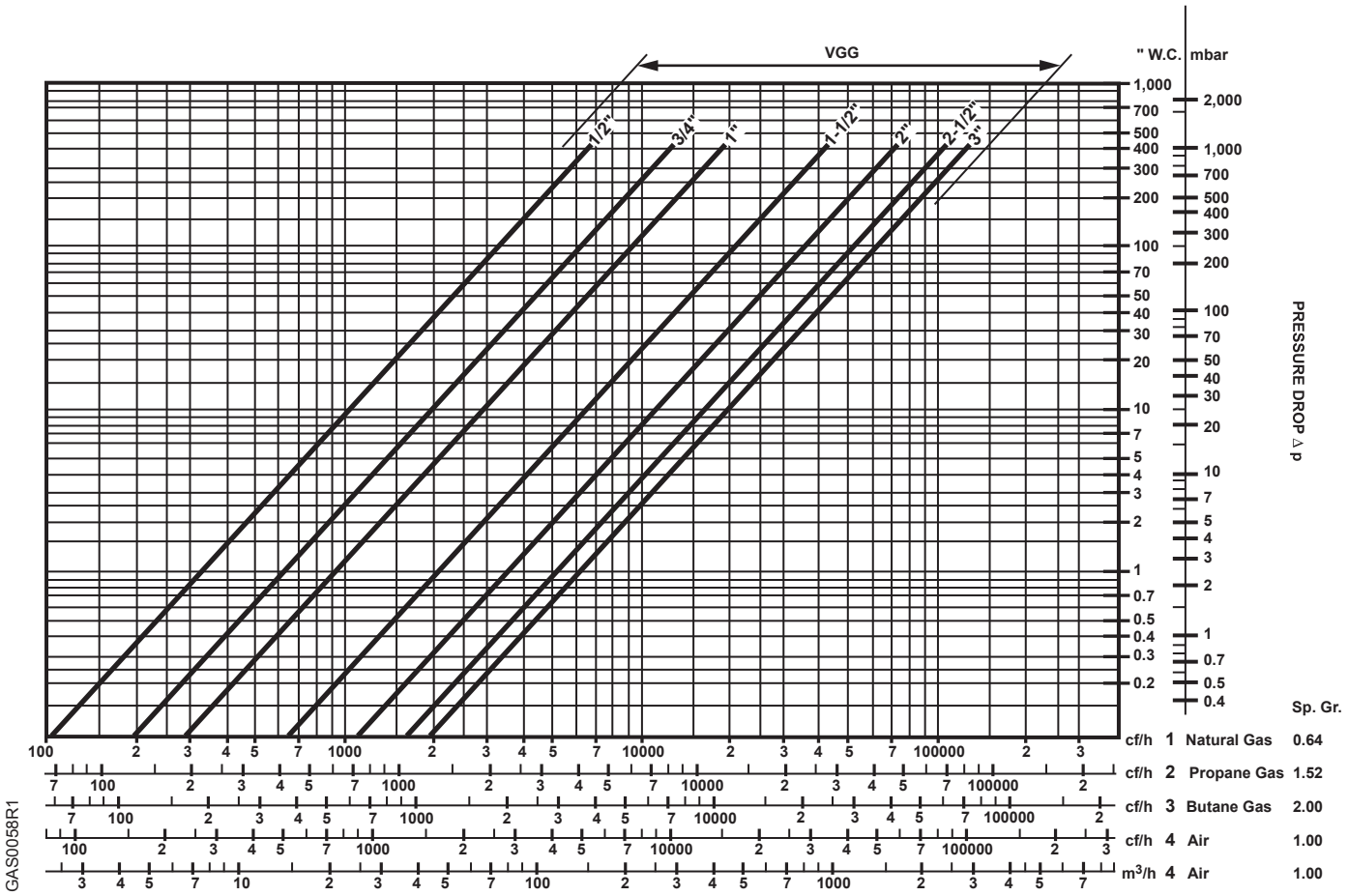


**Figure 4. Sizing Single Valves Without NEMA 4 Kit.**

**NOTE:** Pressure drop is for one valve when using an SKPx5…actuator without a NEMA 4 kit (AGA66).

**CAUTION:**

Do not oversize valves equipped with regulating actuators SKP2…, SKP5… or SKP7… Oversizing may limit turndown and could cause oscillations.

## Gas Flow Charts, Continued

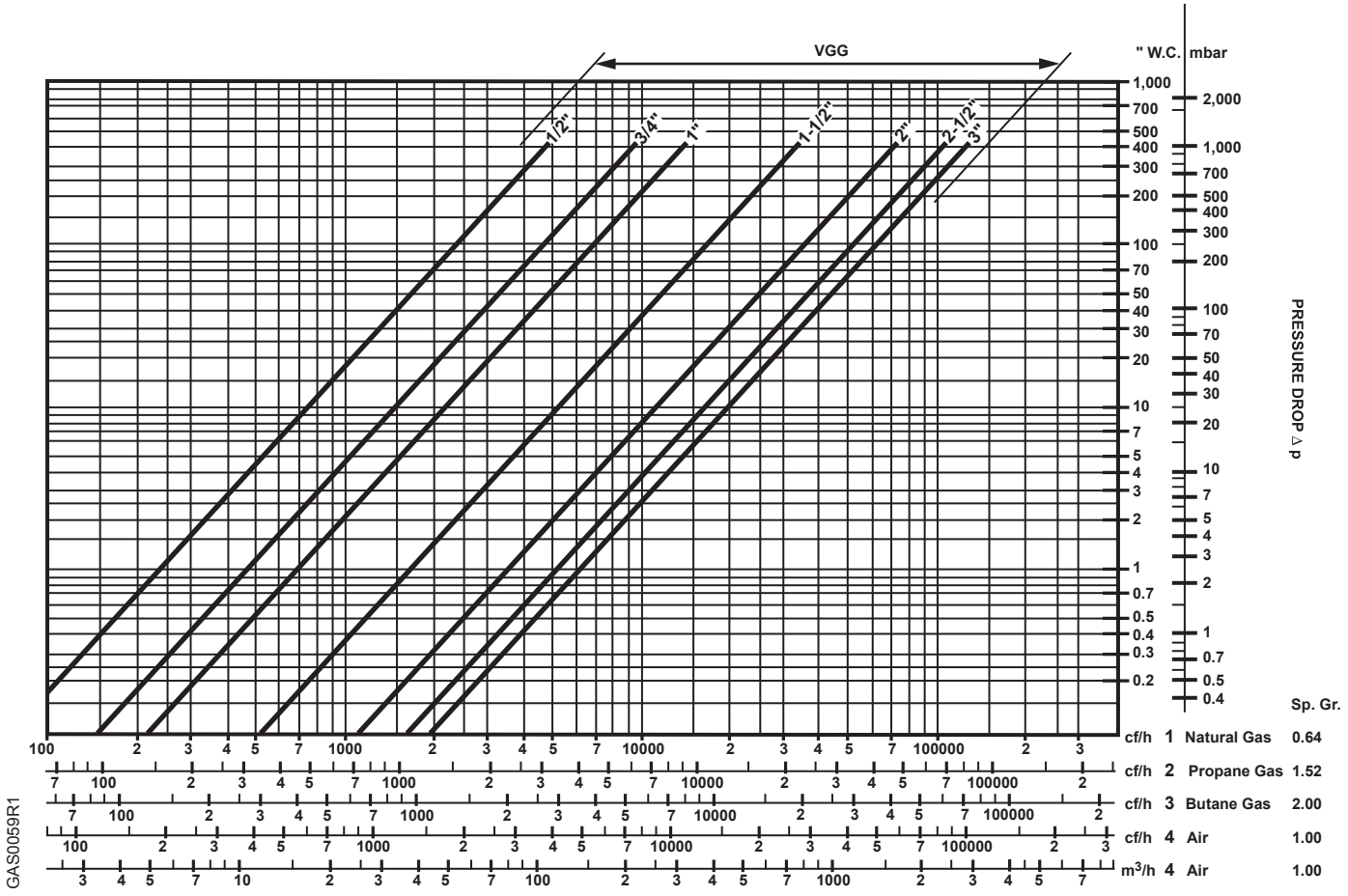


**Figure 4a. Sizing Single Valves With a NEMA 4 Kit.**

**NOTE:** Pressure drop is for one valve when using an SKPx5…actuator and a NEMA 4 kit (AGA66).

**CAUTION:**

Do not oversize valves equipped with regulating actuators SKP2…, SKP5… or SKP7… Oversizing may limit turndown and could cause oscillations.

## Gas Flow Charts, Continued

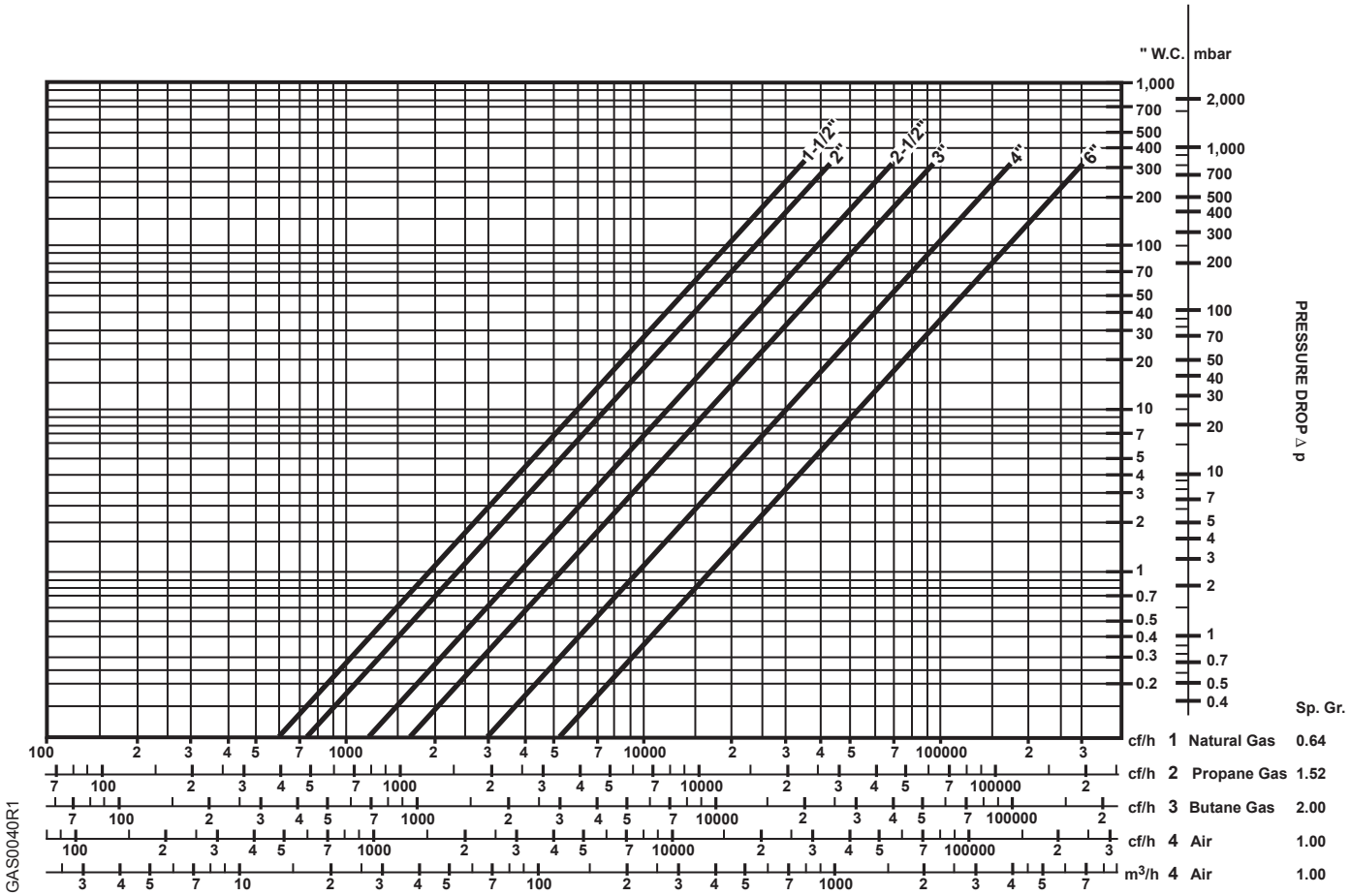


**Figure 5. Sizing Double Valves.**

**NOTE:** Pressure drop is total drop across both valves when using an SKPx5… actuator, with or without an AGA66.

**CAUTION:**

Do not oversize valves equipped with regulating actuators SKP2…, SKP5… or SKP7… Oversizing may limit turndown and could cause oscillations.

## Dimensions

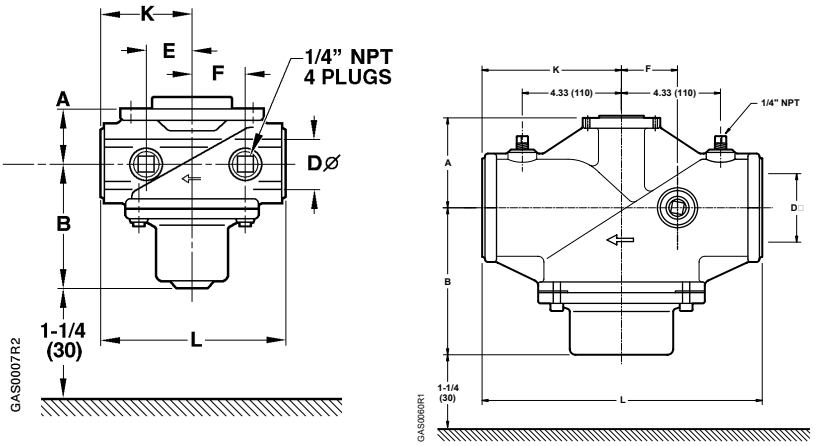


**Table 4. VGG… Models.**

| Valve Model | Nominal Size D Inches | A Inches (mm) | B Inches (mm) | E Inches (mm) | F Inches (mm) | K Inches (mm) | L Inches (mm) | Weight Pounds (kg) |
|---|---|---|---|---|---|---|---|---|
| VGG… | 1/2 | 1-1/4 (32) | 3-1/8 (79) | 1-1/8 (28) | 1-7/32 (31) | 2-3/16 (55) | 4-3/8 (110) | 1.65 (0.75) |
| | 3/4 | 1-1/4 (32) | 3-1/8 (79) | 1-1/8 (28) | 1-7/32 (31) | 2-3/16 (55) | 4-3/8 (110) | 1.65 (0.75) |
| | 1 | 1-1/4 (32) | 3-18 (79) | 1-1/8 (28) | 1-7/32 (31) | 2-3/16 (55) | 4-3/8 (110) | 1.5 (0.7) |
| | 1-1/2 | 1-5/8 (41) | 4 (102) | 1-5/16 (34) | 1-5/16 (34) | 3 (75) | 5-15/16 (150) | 3.3 (1.5) |
| | 2 | 2 (50) | 4-1/4 (107) | 1-5/16 (34) | 1-5/16) (34) | 3-3/8 (85) | 6-3/4 (170) | 4.0 (1.8) |
| | 2-1/2 | 3-5/8 (92) | 6-7/16 (163) | — | 2-7/16 (62) | 5-11/16 (145) | 11-7/16 (290) | 32.5 (14.8) |
| | 3 | 3-15/16 (100) | 6-7/16 (163) | — | 2-7/16 (62) | 6-1/16 (155) | 12-3/16 (310) | 34 (15.5) |

## Dimensions, Continued

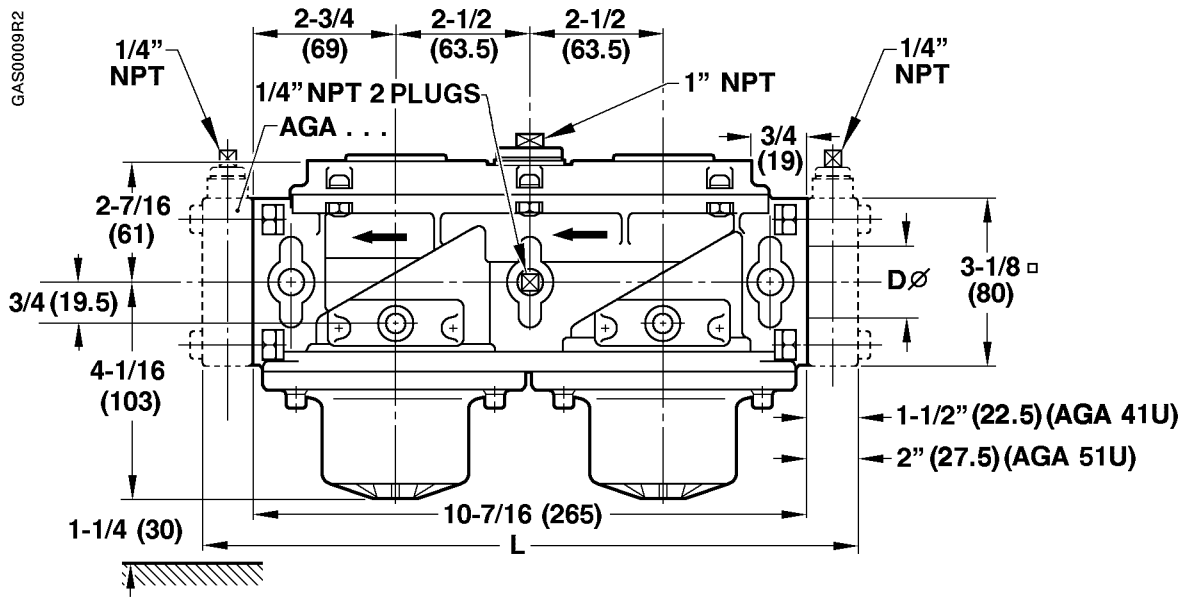


**Table 5. VGD20… Models.**

| Valve Model | Nominal Size D Inches | L Inches (mm) | Weight Pounds (kg) |
|---|---|---|---|
| VGD20… | 1-1/2 | 12-3/16 (310) | 7 (3.2) |
| | 2 | 12-5/8 (320) | 6 (3.15) |

## Dimensions, Continued

Dimensions in Inches (mm)

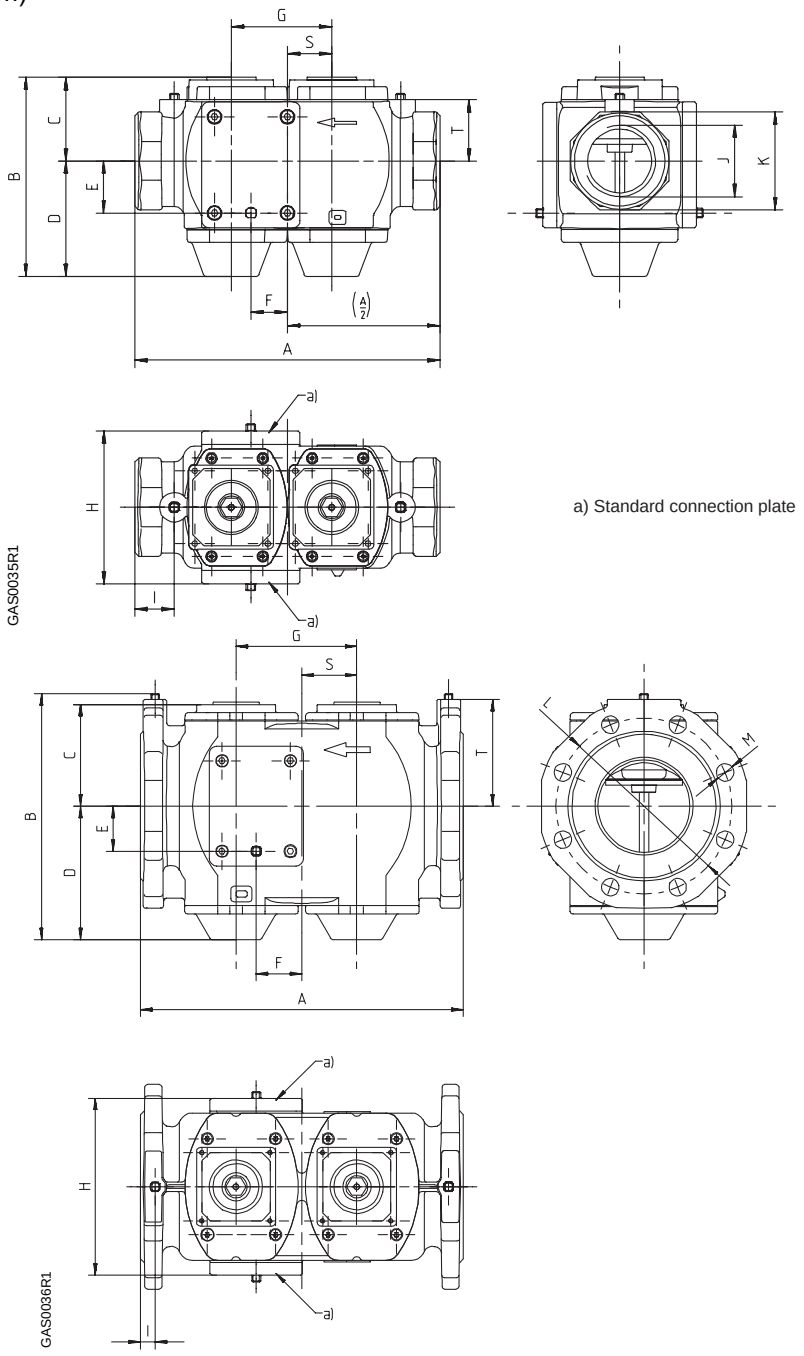


**Table 6. VGD40… Models.**

| Valve Model | A | B | C | D | E | F | G | H | I | J | K * | L | M | S | T |
|---|---|---|---|---|---|---|---|---|---|---|---|---|---|---|---|
| VGD40.065U | 12.09 (307) | 7.00 (203) | 3.25 (83) | 4.63 (118) | 2.09 (53) | 1.46 (37) | 4.02 (102) | 6.14 (156) | 1.57 (40) | 2-1/2" NPT | SW 100 | — | — | 1.77 (45) | 2.44 (62) |
| VGD40.080U | 12.87 (327) | 8.94 (227) | 3.64 (93) | 5.18 (132) | 1.85 (47) | 0.79 (20) | 4.21 (107) | 6.30 (160) | 1.85 (47) | 3" NPT | SW 120 | — | — | 2.34 (60) | 2.83 (72) |
| VGD40.100U | 13.78 (350) | 10.50 (267) | 4.33 (110) | 5.70 (145) | 1.93 (49) | 1.95 (50) | 5.16 (131) | 7.56 (192) | 0.63 (16) | — | — | d=7.50 (191) | d=0.75 (19) | 2.34 (60) | 4.55 (116) |
| VGD40.150U | 18.90 (480) | 13.29 (338) | 5.71 (145) | 7.40 (188) | 2.09 (53) | 2.30 (59) | 6.61 (168) | 10.31 (262) | 0.63 (16) | — | — | d=9.49 (241) | d=0.91 (23) | 3.54 (90) | 5.61 (143) |

* Spanner width in millimeters

## Dimensions, Continued

Option a) Connection plate with 1/4" NPT plugged pressure test port
b) Vent connection plate with vent line connection and 1/4" NPT plugged pressure test port

Note: Plates a) and b) are interchangeable

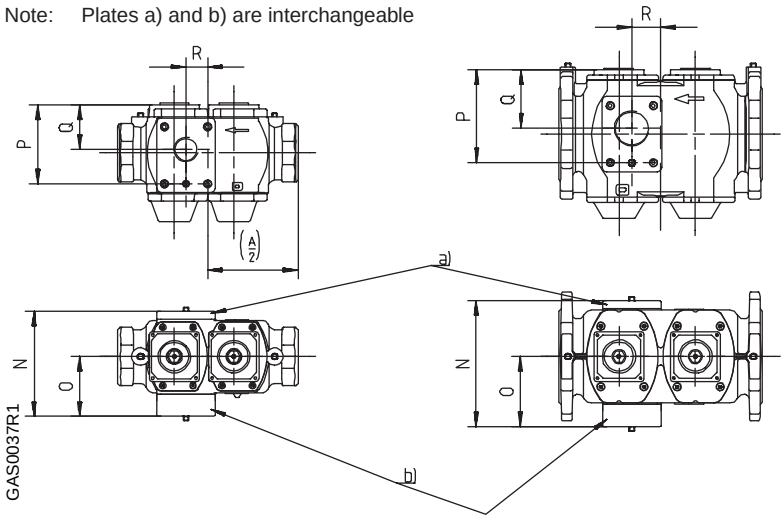


**Table 7. VGD40… Dimensions in Inches (Millimeters).**

| Valve Model | N | O | P | Q | R | Weight Pounds (kg) |
|---|---|---|---|---|---|---|
| VGD40.065U | 7.13 (181) | 4.06 (103) | 5.34 (136) | 3.02 (77) | 1.46 (37) | 16 (7) |
| VGD40.080U | 7.28 (185) | 4.13 (105) | 5.49 (140) | 3.17 (81) | 0.79 (20) | 19 (3) |
| VGD40.100U | 8.54 (217) | 4.76 (121) | 6.26 (159) | 3.94 (100) | 1.95 (50) | 29 (13) |
| VGD40.150U | 11.30 (287) | 6.14 (156) | 7.80 (198) | 5.47 (139) | 2.30 (59) | 53 (24) |

**Table 8. Vent Connection Plate Dimensions.**

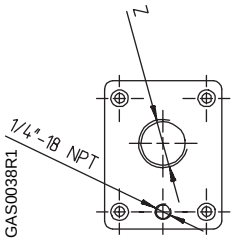


| | VGD40.065U | VGD40.080U | VGD40.100U | VGD40.150U | Thread Vent Connection Size |
|---|---|---|---|---|---|
| AGA40.6580U | X | X | | | 1-1/4" NPT |
| AGA40.0100U | | | X | | 2" NPT |
| AGA40.0150U | | | | X | 2-1/2" NPT |

Information in this publication is based on current specifications. The company reserves the right to make changes in specifications and models as design improvements are introduced. Other product or company names mentioned herein may be the trademarks of their respective owners.
© 2005 Siemens Building Technologies, Inc.

SIEMENS

# Technical Instructions

Document No. 155-512P25
VG…
September 14, 2005

# VG Series

## VGG… and VGD… Gas Valves for use with SKP… Electro-hydraulic Actuators

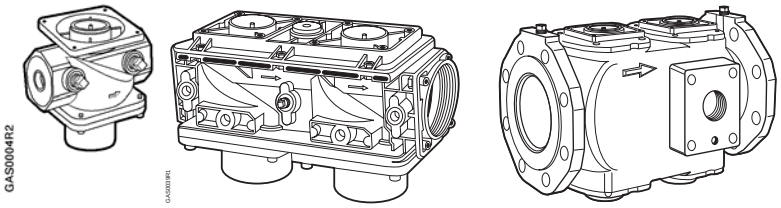

VGG… VGD20… VGD40…

ISO 9001 and 14000 REGISTERED FIRM

UL LISTED

FM APPROVED

Only when assembled to SKP… Series actuators

### Description

The normally closed VG… Series of modular single and double-body gas valves combined with SKP… Series electro-hydraulic actuators provide safety shut-off, gas pressure regulation and air/gas ratio control for commercial and industrial gas burners.

**Table 1. Legend.**

| Model Numbers | Body Style | Connection |
|---|---|---|
| VGG… | Single | NPT Threaded |
| VGD… | Double | NPT Threaded or ANSI Flanged |

### Features

**All Models**

- UL listed, FM approved, CSA certified, IRI approvable, ISO 9001 and 14000 certified. European, Australian and Japanese approved versions available.
- Stainless steel mesh inlet filter protects the valve seat(s) as well as downstream components.
- 1/4-inch NPT pressure taps on the inlet and outlet. (See Table 2 for details).
- Dual stem guides ensure precise disc alignment and tight shut-off.

**VGG… Models**

- Contoured valve disc provides smooth release of gas and stable regulating control.
- 3/4-inch NPT port for pilot or vent line connection on 2-1/2 and 3-inch VGG…valves.

**VGD20… Models**

- Compact VGD20… double-valve bodies consist of two safety shut-off valves in series. The first (inlet) valve has a flat valve disc applicable for safety shut-off function only. The second (outlet) valve has a contoured valve disc for use with pressure regulating actuators (SKP2…, SKP5…, SKP7…).
- A one-inch NPT vent connection between the valves.
- Each VGD20… double-valve requires two threaded mounting flanges (AGAxxU). Each flange includes the necessary installation hardware (bolts, nuts and O-ring). Each mounting flange has a 1/4-inch NPT pressure tap. The flanges can be pre-mounted onto the pipe, and then bolted onto the VGD20… gas valve body. This feature eliminates the use of pipe unions and permits the gas valve assembly to be easily removed from a gas train.
- The overall dimensions of both the 1-1/2-inch and 2-inch AGAxxU flanges are identical. This permits a 1-1/2-inch flange to be mounted on a 2-inch valve body or vice versa.

**NOTE:** VGD20… valves and AGAxxU threaded flanges must be ordered as separate items (See Table 2).

**VGD40… Models**

- Compact VGD40… double-valve bodies consist of two safety shut-off valves in series.
- Each individual safety shut-off valve has double seats to achieve high flow.
- Patented seat construction with individual closing spring for each seat to assure reliable shut-off and high close-off pressure rating.
- Full port vent line connection plates are available.

**NOTE:** VGD40… valves and AGA… vent connection plates must be ordered as separate items (See Table 2).

## Application

All VG… valves can be combined with any SKP… Series actuator. The actuator can be mounted while the valve is installed and under pressure.

SKP… regulating actuators are applicable for both low and high supply gas pressure applications, eliminating excessive regulator inventories. Maximum pressure ratings vary with valve size (See Table 2).

All VG… valves perform these functions in combination with each of the following actuators:

| | |
|---|---|
| SKP15… | Safety shut-off |
| SKP25… | Safety shut-off and constant pressure regulation or zero governor. |
| SKP55… | Safety shut-off, pressure regulation and differential pressure air/gas ratio control. |
| SKP75… | Safety shut-off, pressure regulation and adjustable air/gas ratio control. |

Since more than one function can be performed by a single valve, fewer components and fittings are required to assemble a gas train - significantly reducing both the size and weight of the gas train. In addition, smaller diameter gas valves can be used. For details on valve sizing, see the Gas Flow Charts (Figures 4 and 5).



**CAUTION:**

Do not oversize valves equipped with a regulating SKP… actuator. Oversizing may limit turndown and could cause oscillations.

## Ordering Information

Gas valves and actuators are ordered separately. For additional SKP… actuator information, see the following Technical Instructions:

| | |
|---|---|
| SKP15… | 155-751P25 |
| SKP25… | 155-752P25 |
| SKP55… | 155-753P25 |
| SKP75… | 155-754P25 |

## Accessories

Manual adjusting throttle attachment AGA61 permits VG… series valves to be used as adjustable limiting orifice valves. Once adjusted, the AGA61 has a provision to be sealed from tampering (See Table 3).

Adapter plate AGA60 permits VG… series valves to be used for modulating flow control when fitted with an SQX… series modulating actuator (See Table 3).

**NOTE:** The VG… /SQX… valve/actuator combination is designed strictly for modulating flow control and does not provide safety shut-off function.

**Table 2. Product Numbers.**

| Product Number | Size | Maximum Operating Pressure psi | Close-off Pressure psi | Capacity CFH Natural Gas at ΔP=1" W.C. | Number of Test Points, 1/4" NPT | | 3/4" NPT Port | Valve Body Material |
|---|---|---|---|---|---|---|---|---|
| | | | | | Inlet | Outlet | | |
| VGG10.154U | 1/2" NPT | 20 | 75 | 327/242◆ | 2 | 2 | — | Aluminum |
| VGG10.204U | 3/4" NPT | 20 | 75 | 614/442◆ | 2 | 2 | — | Aluminum |
| VGG10.254U | 1" NPT | 20 | 75 | 914/686◆ | 2 | 2 | — | Aluminum |
| VGG10.404U | 1-1/2" NPT | 20 | 75 | 2,047/1,643◆ | 2 | 2 | — | Aluminum |
| VGG10.504U | 2" NPT | 15 | 75 | 3,511 | 2 | 2 | — | Aluminum |
| VGG10.654U | 2-1/2" NPT | 10 | 25 | 5,085 | 1 | 1 | 2-inlet | Cast Iron |
| VGG10.804U | 3" NPT | 10 | 25 | 6,158 | 1 | 1 | 2-inlet | Cast Iron |
| | | | | | | | | |
| *VGD20.403U | 1-1/2" | 20 | 30 | 1,890 | Two 1/4-inch and one 1-inch port between valves | | — | Aluminum |
| *VGD20.503U | 2" | 15 | 30 | 2,300 | | | — | Aluminum |
| | | | | | | | | |
| *AGA41U | Single 1-1/2" connecting flange with 1/4-inch port for VGD 20.403U | | | | | | Two (2) needed per valve. Order separately. | |
| *AGA51U | Single 2" connecting flange with 1/4-inch port for VGD 20.503U | | | | | | | |
| | | | | | | | | |
| VGD40.065U | 2-1/2" NPT | 10 | 75 | 3,880 | 1 | 1 | Two 1/4-inch NPT ports between the valves. | Aluminum |
| VGD40.080U | 3" NPT | 10 | 75 | 5,370 | 1 | 1 | | Aluminum |
| VGD40.100U | 4" Flanged | 10 | 30 | 9,680 | 1 | 1 | | Aluminum |
| VGD40.150U | 6" Flanged | 10 | 30 | 17,490 | 1 | 1 | | Aluminum |

* VGD20… double valves require 2 AGAxxU threaded flanges for installation.

◆ VGG… valves, 1/2- through 1-1/2 inch have reduced flow when used with AGA66 (NEMA 4 kit). Capacities shown are without/with NEMA 4 kit (See Figure 4a).

**Table 3. Accessories.**

| Part Number | Description | Notes |
|---|---|---|
| AGA40.6580U | Vent connection plate with 1-1/4" NPT vent connection and 1/4" NPT test port | Order separately. For use with VGD40… only. |
| AGA40.0100U | Vent connection plate with 2" NPT vent connection and 1/4" NPT test port | |
| AGA40.0150U | Vent connection plate with 2-1/2" NPT vent connection and 1/4" NPT test port | |
| | | |
| AGA60 | Adapter for use with SQX… actuators | |
| AGA61 | Manual operation kit, allows VG… valves to be used as adjustable limiting orifice valve. | |
| AGA66 | Sealing gasket to provide NEMA 3, NEMA 3R, and NEMA 4 protection. | |

## Specifications

| | | |
|---|---|---|
| **Approvals** | Agency approvals/standards | UL/429, FM/7400,<br>CSA/AINSI Z21.21/CGA 6.5 Commercial/Industrial<br>IRI approvable<br>Agency marks apply only for VGxxx.xxxU series gas valve bodies assembled with SKPxx.xxxU actuators. |
| **Operating Environment** | Maximum operating pressure | See Table 2 |
| | Maximum back pressure (differential) | 2.5 psi (150 mbar) |
| | Close-off pressure | See Table 2 |
| | Permissible gases | Natural gas, propane, butane, air, and other non-corrosive gases. |
| | Permissible gas temperature | 5°F to 140°F (-15°C to 60°C) |
| | Permissible operating temperature | 5°F to 140°F (-15°C to 60°C) |
| | Mounting | Any position except upside down |
| **Physical Characteristics** | Body materials | See Table 2 |
| | Weight | See Tables 4 through 7 |
| **Connections** | Pipe connections | NPT or ANSI Class 150 flange (See Table 2) |
| | Pressure and vent taps | See Table 2 |

## Operation

All VG… gas valves are normally closed, two-way valves. The valves have a standard, integral, stainless steel mesh filter (0.8 mm) in the inlet to protect the downstream components against contamination.

VGG… series gas valves have a contoured valve disc for stable regulating control and smooth release of gas (see Figure 1).

VGD20… double valves consist of two valves in series. The first (inlet) valve has a flat valve disc suitable for the safety shut-off function only. The second (outlet) valve has a contoured valve disc for stable regulating control and smooth release of gas (see Figure 2).

VGD40… double valves consist of two valves in series. Each valve has a double seat to achieve high flow (see Figure 3).

All valves have 1/4-inch NPT ports for pressure test connection. The 2-1/2-inch and 3-inch VGG… valves have an additional 3/4-inch NPT port for a pilot connection. The VGD20… valves have a 1-inch NPT port for a vent line connection. The VGD40… valves can be equipped with a full size vent connection plate.

See Table 1 for details on ports and vent connection plates.

## Operation, Continued

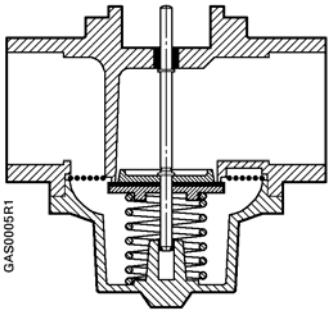


**Figure 1. VGG… Models.**

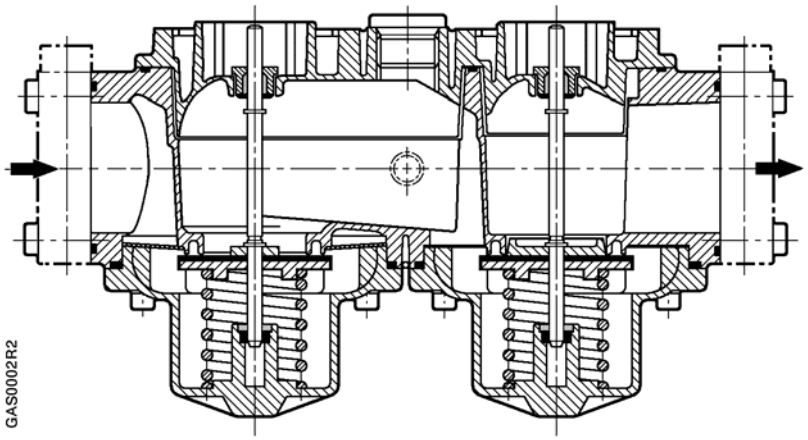


**Figure 2. VGD20… Models.**

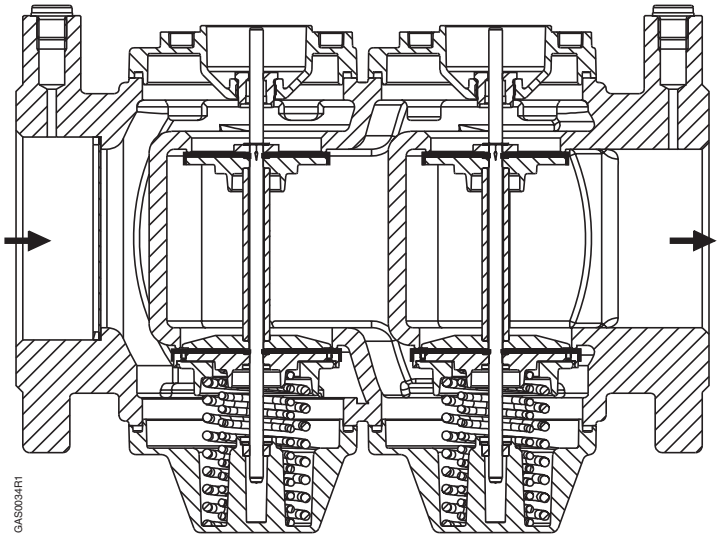


**Figure 3. VGD40… Models.**

## Gas Flow Charts

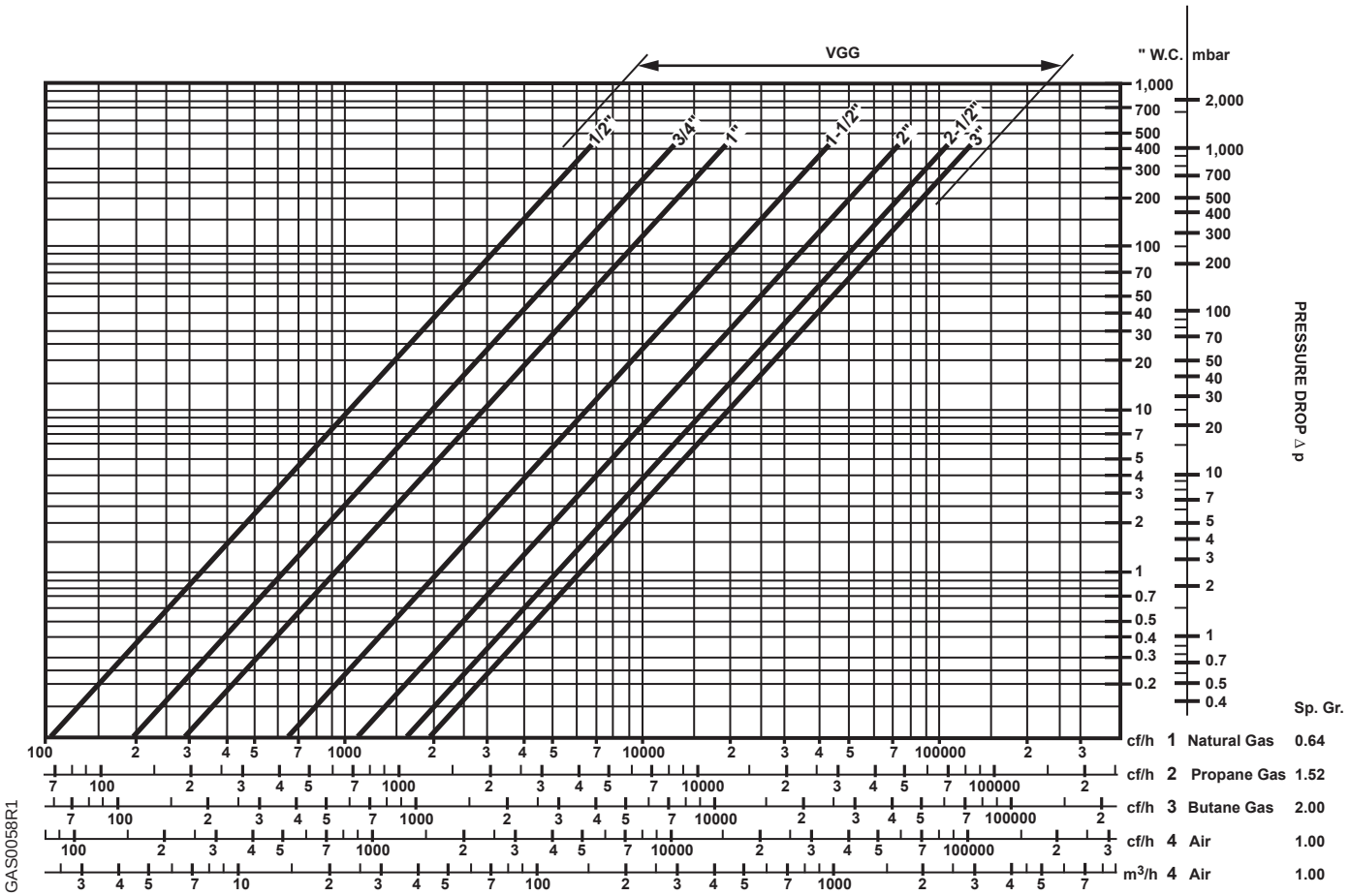


**Figure 4. Sizing Single Valves Without NEMA 4 Kit.**

**NOTE:** Pressure drop is for one valve when using an SKPx5…actuator without a NEMA 4 kit (AGA66).

**CAUTION:**

Do not oversize valves equipped with regulating actuators SKP2…, SKP5… or SKP7… Oversizing may limit turndown and could cause oscillations.

## Gas Flow Charts, Continued

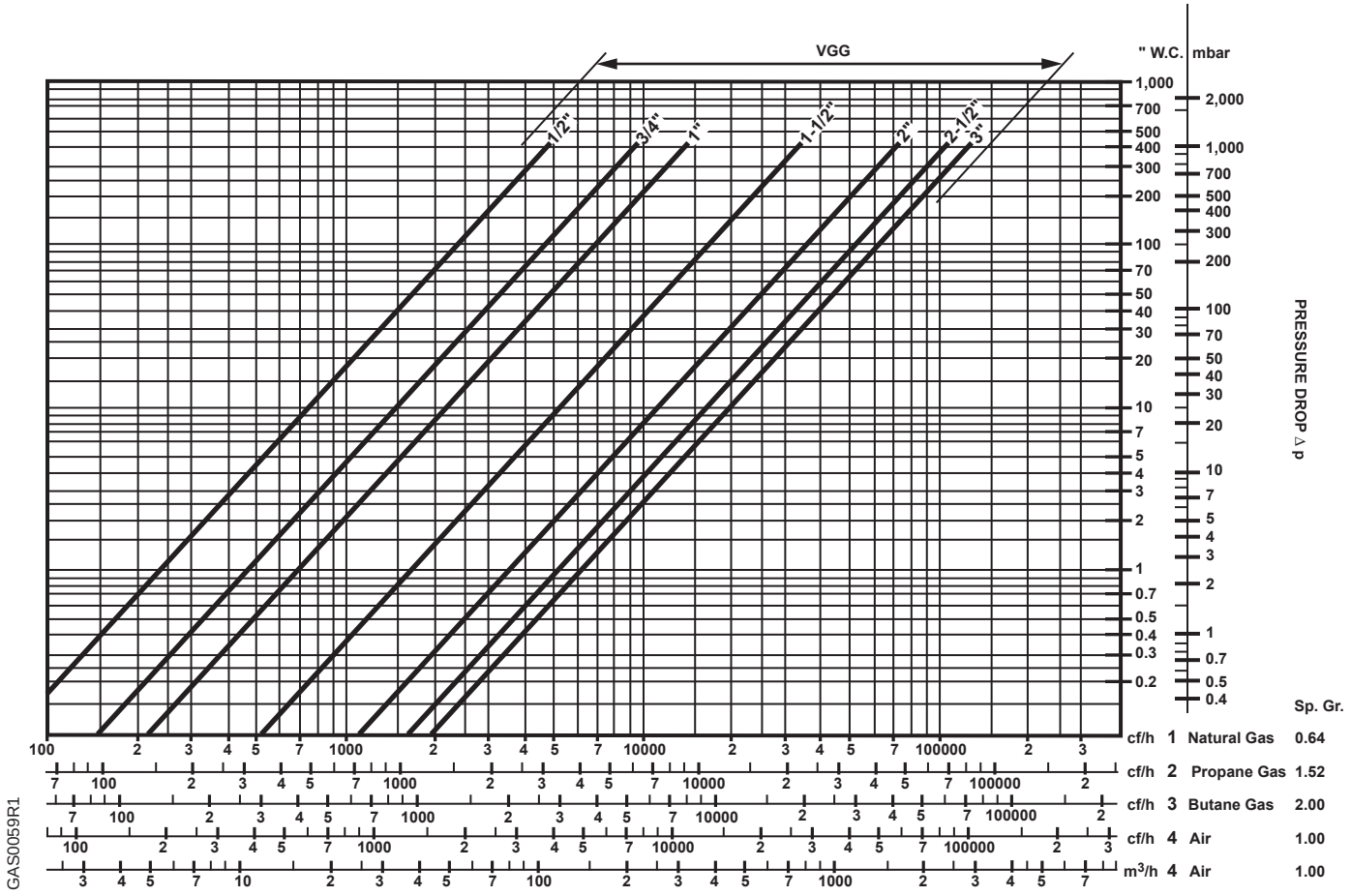


**Figure 4a. Sizing Single Valves With a NEMA 4 Kit.**

**NOTE:** Pressure drop is for one valve when using an SKPx5…actuator and a NEMA 4 kit (AGA66).

**CAUTION:**

Do not oversize valves equipped with regulating actuators SKP2…, SKP5… or SKP7… Oversizing may limit turndown and could cause oscillations.

## Gas Flow Charts, Continued

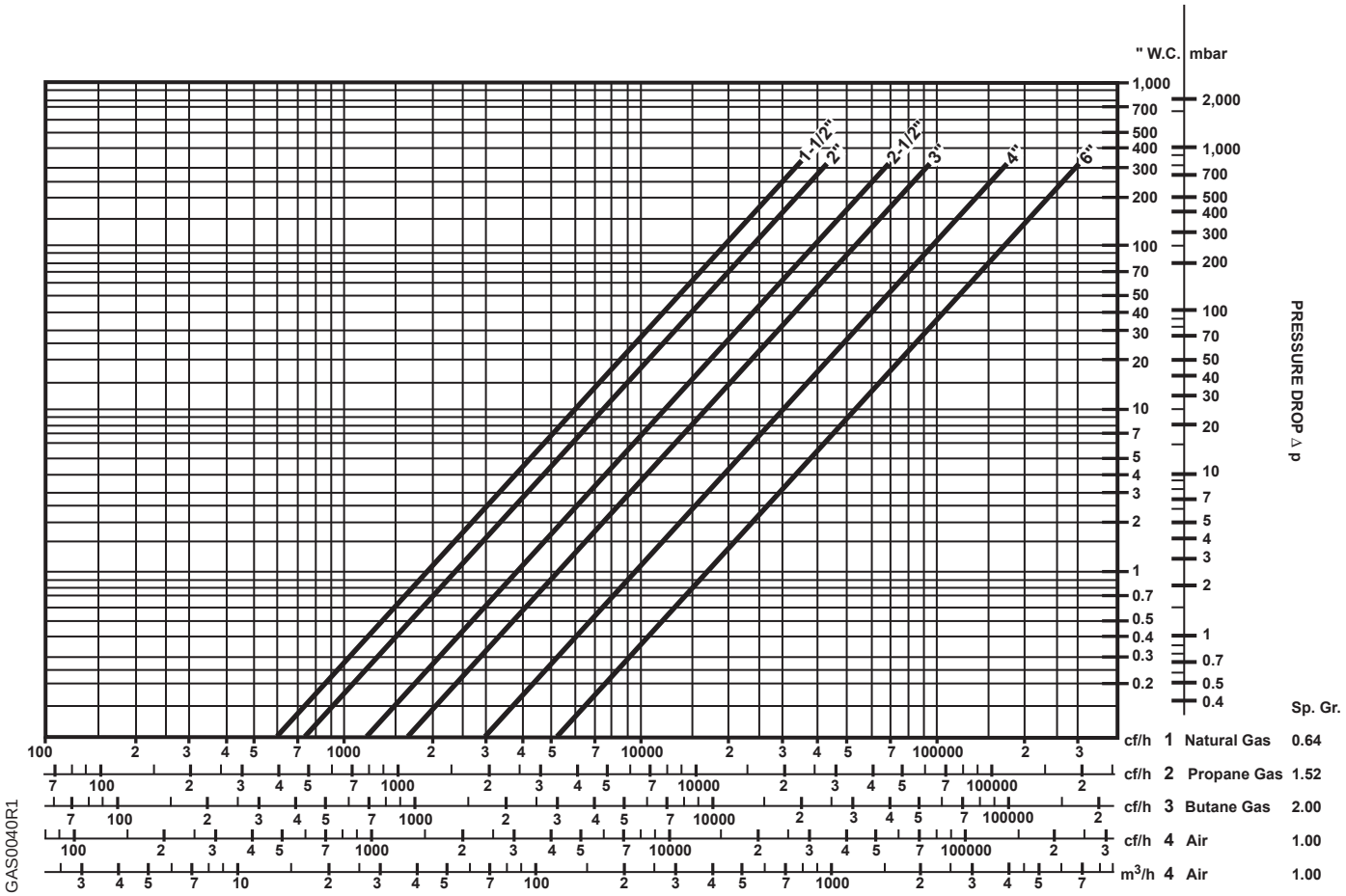


**Figure 5. Sizing Double Valves.**

**NOTE:** Pressure drop is total drop across both valves when using an SKPx5… actuator, with or without an AGA66.

**CAUTION:**

Do not oversize valves equipped with regulating actuators SKP2…, SKP5… or SKP7… Oversizing may limit turndown and could cause oscillations.

## Dimensions

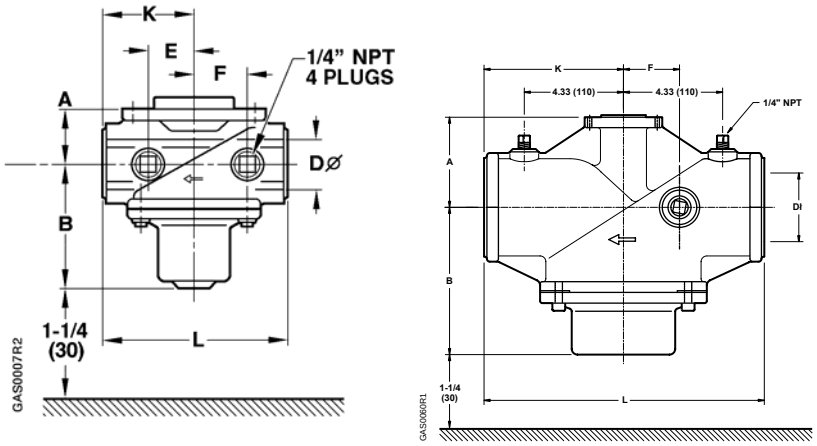


**Table 4. VGG… Models.**

| Valve Model | Nominal Size D Inches | A Inches (mm) | B Inches (mm) | E Inches (mm) | F Inches (mm) | K Inches (mm) | L Inches (mm) | Weight Pounds (kg) |
|---|---|---|---|---|---|---|---|---|
| VGG… | 1/2 | 1-1/4 (32) | 3-1/8 (79) | 1-1/8 (28) | 1-7/32 (31) | 2-3/16 (55) | 4-3/8 (110) | 1.65 (0.75) |
| | 3/4 | 1-1/4 (32) | 3-1/8 (79) | 1-1/8 (28) | 1-7/32 (31) | 2-3/16 (55) | 4-3/8 (110) | 1.65 (0.75) |
| | 1 | 1-1/4 (32) | 3-18 (79) | 1-1/8 (28) | 1-7/32 (31) | 2-3/16 (55) | 4-3/8 (110) | 1.5 (0.7) |
| | 1-1/2 | 1-5/8 (41) | 4 (102) | 1-5/16 (34) | 1-5/16 (34) | 3 (75) | 5-15/16 (150) | 3.3 (1.5) |
| | 2 | 2 (50) | 4-1/4 (107) | 1-5/16 (34) | 1-5/16) (34) | 3-3/8 (85) | 6-3/4 (170) | 4.0 (1.8) |
| | 2-1/2 | 3-5/8 (92) | 6-7/16 (163) | — | 2-7/16 (62) | 5-11/16 (145) | 11-7/16 (290) | 32.5 (14.8) |
| | 3 | 3-15/16 (100) | 6-7/16 (163) | — | 2-7/16 (62) | 6-1/16 (155) | 12-3/16 (310) | 34 (15.5) |

## Dimensions, Continued

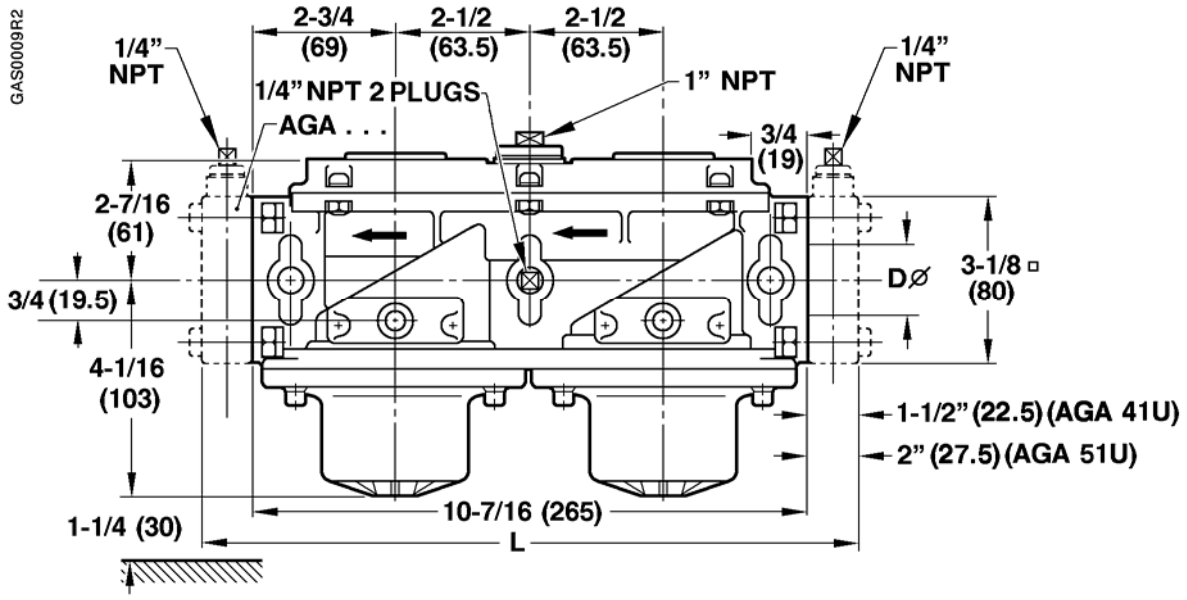


**Table 5. VGD20… Models.**

| Valve Model | Nominal Size D<br>Inches | L<br>Inches (mm) | Weight<br>Pounds (kg) |
|---|---|---|---|
| VGD20… | 1-1/2 | 12-3/16<br>(310) | 7<br>(3.2) |
| | 2 | 12-5/8<br>(320) | 6<br>(3.15) |

## Dimensions, Continued

Dimensions in Inches (mm)

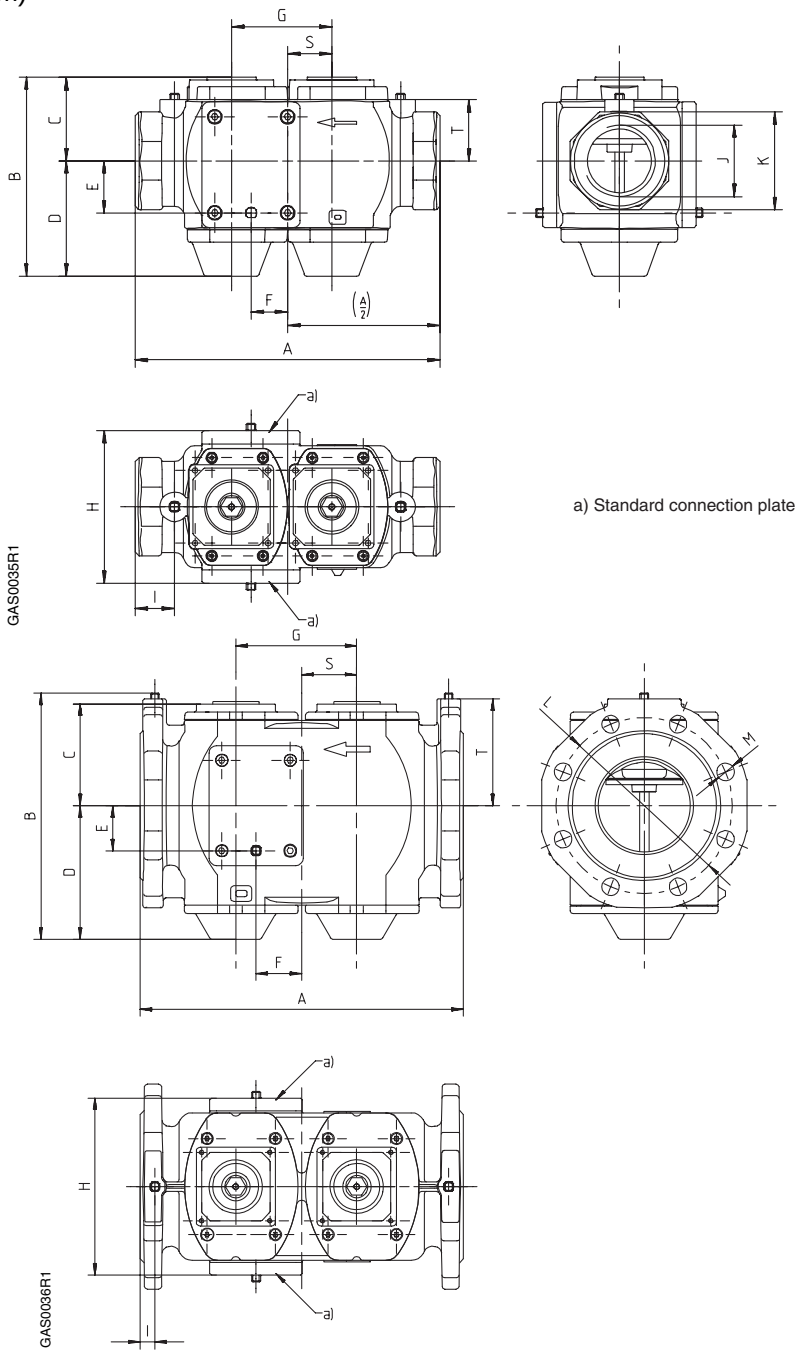


**Table 6. VGD40… Models.**

| Valve Model | A | B | C | D | E | F | G | H | I | J | K * | L | M | S | T |
|---|---|---|---|---|---|---|---|---|---|---|---|---|---|---|---|
| VGD40.065U | 12.09 (307) | 7.00 (203) | 3.25 (83) | 4.63 (118) | 2.09 (53) | 1.46 (37) | 4.02 (102) | 6.14 (156) | 1.57 (40) | 2-1/2" NPT | SW 100 | — | — | 1.77 (45) | 2.44 (62) |
| VGD40.080U | 12.87 (327) | 8.94 (227) | 3.64 (93) | 5.18 (132) | 1.85 (47) | 0.79 (20) | 4.21 (107) | 6.30 (160) | 1.85 (47) | 3" NPT | SW 120 | — | — | 2.34 (60) | 2.83 (72) |
| VGD40.100U | 13.78 (350) | 10.50 (267) | 4.33 (110) | 5.70 (145) | 1.93 (49) | 1.95 (50) | 5.16 (131) | 7.56 (192) | 0.63 (16) | — | — | d=7.50 (191) | d=0.75 (19) | 2.34 (60) | 4.55 (116) |
| VGD40.150U | 18.90 (480) | 13.29 (338) | 5.71 (145) | 7.40 (188) | 2.09 (53) | 2.30 (59) | 6.61 (168) | 10.31 (262) | 0.63 (16) | — | — | d=9.49 (241) | d=0.91 (23) | 3.54 (90) | 5.61 (143) |

* Spanner width in millimeters

## Dimensions, Continued

Option a) Connection plate with 1/4" NPT plugged pressure test port
b) Vent connection plate with vent line connection and 1/4" NPT plugged pressure test port

Note: Plates a) and b) are interchangeable

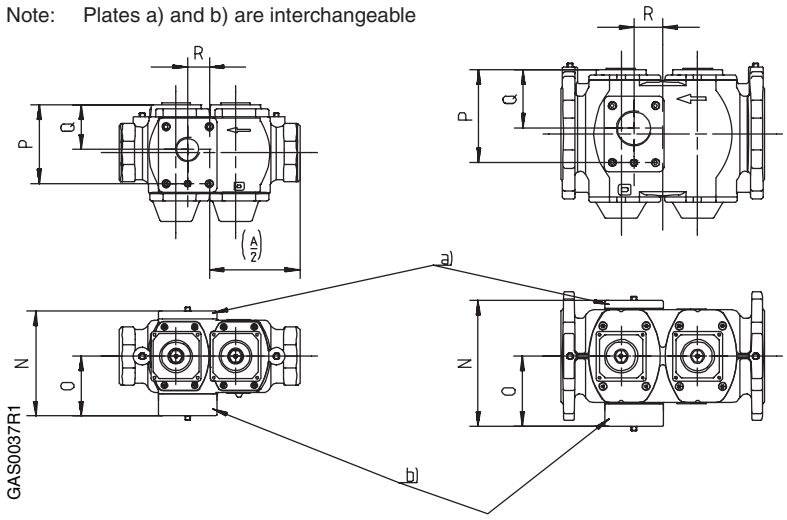


**Table 7. VGD40… Dimensions in Inches (Millimeters).**

| Valve Model | N | O | P | Q | R | Weight Pounds (kg) |
|---|---|---|---|---|---|---|
| VGD40.065U | 7.13 (181) | 4.06 (103) | 5.34 (136) | 3.02 (77) | 1.46 (37) | 16 (7) |
| VGD40.080U | 7.28 (185) | 4.13 (105) | 5.49 (140) | 3.17 (81) | 0.79 (20) | 19 (3) |
| VGD40.100U | 8.54 (217) | 4.76 (121) | 6.26 (159) | 3.94 (100) | 1.95 (50) | 29 (13) |
| VGD40.150U | 11.30 (287) | 6.14 (156) | 7.80 (198) | 5.47 (139) | 2.30 (59) | 53 (24) |

**Table 8. Vent Connection Plate Dimensions.**

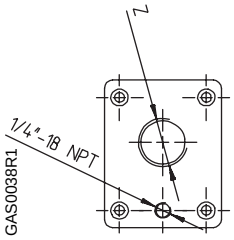


| | VGD40.065U | VGD40.080U | VGD40.100U | VGD40.150U | Thread Vent Connection Size |
|---|---|---|---|---|---|
| AGA40.6580U | X | X | | | 1-1/4" NPT |
| AGA40.0100U | | | X | | 2" NPT |
| AGA40.0150U | | | | X | 2-1/2" NPT |

Information in this publication is based on current specifications. The company reserves the right to make changes in specifications and models as design improvements are introduced. Other product or company names mentioned herein may be the trademarks of their respective owners.
© 2005 Siemens Building Technologies, Inc.

# SECTION 5
# TEMPERATURE CONTROLS

US FURNACES, INC MAX 4000

# SR90 Series
# (SR91, SR92, SR93, SR94)
# Digital Controller
# **Instruction Manual**

Please check that the delivered product is the correct item or specification you ordered.
Please do not begin operating this product before you read this instruction manual thoroughly and understand its contents.

## Notice

Please ensure that this instruction manual is given to the final user of the instrument.

## Preface

This instruction manual is meant for those who will be involved in the wiring, installation, operation and routine maintenance of the SR90 series (SR91, SR92, SR93 and SR94) and describes matters to be attended to in handling the SR90 series, how to install it, its wiring, its functions and operating procedures.
Keep this manual at the work site while handling the instrument and follow the guidance provided herein.

**SHIMADEN CO., LTD.**

SR90F-1HE
Aug. 2011

# Contents


**Notice** ..... 1

**Preface** ..... 1

**1. Safety Rules** ..... 3

**2. Introduction** ..... 4

2-1. Check before Use ..... 4
(1) Confirmation of Model Codes ..... 4
(2) Confirmation of Accessories ..... 5

2-2. Handling Instruction ..... 5

**3. Installation and Wiring** ..... 5

3-1. Installation Site (environmental conditions) ..... 5

3-2. Mounting ..... 5

3-3. External Dimensions and Panel Cutout ..... 6

3-4. Wiring ..... 7

3-5. Terminal Layout ..... 8

3-6. Terminal Arrangement Table ..... 9

3-7. Before Starting Operation ..... 9

**4. Names and Functions of Parts on Front Panel** 10

**5. Explanation of Screens and Setting** ..... 11

5-1. Parameter Flow ..... 11

5-2. Display upon Power-ON ..... 12

5-3. How to Change Screens ..... 12
(1) How to change screens in screen group 0 ..... 12
(2) How to change screen group 0 to/from screen group 1 . 12
(3) How to change screen in screen group 1 ..... 12
(4) How to change set values (data) ..... 13

5-4. Auto Return Function ..... 13

5-5. Procedure of Setting in Screen Group 0 ..... 13
(1) Setting of target set value (SV) ..... 13
(2) Manual setting of control output ..... 13
(3) AT (auto tuning) ..... 14
(4) Standby mode (STBY) ..... 15
(5) Setting of event set value ..... 16
(6) Set value bias ..... 16

**6. Explanation of Screen Group and Setting** ..... 17

**7. Table of Measuring Range Codes** ..... 22

**8. Explanation of Functions** ..... 23

8-1. Events ..... 23
(1) Deviation alarm ..... 23
(2) Absolute value alarm ..... 23
(3) Standby action ..... 23
(4) No-standby action ..... 23
(5) Control mode ..... 23

8-2. Selection of Event Standby Action Code ..... 23

8-3. Alarm Action Diagrams ..... 24

8-4. P.I.D. ..... 24
(1) P (Proportional band) ..... 24
(2) I (Integral time) ..... 24
(3) D (Derivative time) ..... 24
(4) MR (Manual Reset) ..... 24

8-5. Lower Limit and Higher Limit Setting Limiters ..... 24

8-6. Proportional Cycle Time ..... 25

8-7. Control Output Characteristics ..... 25
(1) One-output ..... 25
(2) Two-output ..... 25

8-8. External input (DI) ..... 25
(1) Set value bias (SB) ..... 25
(2) Standby (STBY) ..... 26
(3) Control action characteristics (ACT) ..... 26

8-9. Soft Start ..... 26
(1) Conditions of soft start function is put in action ..... 26
(2) Conditions of soft start is released ..... 26

**9. Maintenance and Troubleshooting** ..... 27

9-1. Cause of Trouble and Troubleshooting ..... 27

9-2. Error Codes, Causes and Remedies ..... 27
(1) Input measured value problems ..... 27
(2) Heater break/loop alarm problems ..... 27

**10. Record of Parameter Setting** ..... 28

**11. Specifications** ..... 29

# 1. Safety Rules

For matters regarding safety, potential damage to equipment and/or facilities, additional instructions and notes are indicated by the following headings.

WARNING: This heading indicates hazardous conditions that could cause injury or death of personnel unless extreme caution is exercised.
CAUTION: This heading indicates hazardous conditions that could cause damage to equipment and/or facilities unless extreme caution is exercised.
NOTE:This heading indicates additional instructions and/or notes.
The mark ⏚ represents a protective conductor terminal. Make sure to ground it properly.

## ⚠ WARNING

The SR90 series is designed for controlling temperature, humidity and other physical quantities of general industrial equipment. Avoid using it for control of devices upon which human life is dependent. When used, adequate and effective safety measures must be taken. No warranty is valid in the case of an accident arising from the use of this product without having taken such safety measures.

- For using this instrument, house it in a control box or the like to prevent terminals from coming into contact with personnel.
- Do not draw out the instrument out from its case. Do not let your hand or any conductive body into the case. It may lead to serious injury or death due to an electric shock.
- Make sure to ground protective conductor terminals.

## ⚠ CAUTION

To avoid damage to connected equipment, facilities or the SR90 itself due to a fault of the product, safety measures must be taken before usage, such as the installation of a fuse, an overheating protection device and the like. No warranty is valid in the case of an accident arising from the use of this product without such safety measures.

- The alert mark ⚠ on the plate affixed to the instrument:
  On the terminal nameplate affixed to the case of this instrument, the alert mark ⚠ is printed. This is to warn you of the risk of electric shock which may result if the charger is touched while being energized.
- As a means to turn the power off, a switch or a breaker should be installed in the external power circuit to be connected to the power terminal of the instrument. Fix the switch or the breaker adjacently to the instrument in a position which allows it to be operated with ease, with an indication that it is a means of turning the power off. Use a switch or a breaker which meets IEC60947 requirements.
- Fuse:
  Since the instrument does not have a built-in fuse, do not forget to install a fuse in the power circuit to be connected to the power terminal. A fuse should be positioned between a switch or a breaker and the instrumentand mounted on the L side of the power terminal.
  Fuse rating/characteristics: 250 V AC 0.5 A/medium lagged or lagged type.
  Use a fuse which meets IEC60127 requirements.
- Voltage/current of a load to be connected to the output terminal and the event terminal should be within a rated range. Otherwise, the temperature will rise to reduce the life of the product and/or to result in problems with the product. For rated voltage/current, please refer to "11. Specifications".
  The output terminal should be connected with a device which meets the requirements of IEC61010.
- A voltage/current different from that of the input specification should not be applied to the input terminal. It may reduce the life of the product and/or result in problems with the product. For rated voltage/current, please refer to "11. Specifications".
  In the case of voltage or current input, the input terminalshould be connected to a device which meets IEC61010 requirements.
  The instrument is provided with a draft hole for heat discharge. Take care to prevent metal and other foreign matter from entering into it. Failure to do so may result in trouble with the instrument or may even cause a fire.
- Do not block the draft hole or allow dust or the like to stick to it. A rise in temperature or insulation failure may result in a reduction of the life of the product and/or problems with it or may cause a fire. For spaces between installed instruments, refer to "3-3.External Dimensions and Panel Cutout".
- It should be noted that repeated tolerance tests against voltage, noise, surge, etc., may lead to deterioration of the instrument.
- Users are prohibited from remodeling the product or using it in a prohibited way.

# 2. Introduction

## 2-1. Check before Use

This product has been fully inspected for quality assurance prior to shipment. Nevertheless, you are requested to make sure that there is no error, damage or shortage of delivered items by checking the model codes, the external view of the product, and the number of accessories.

Check the model codes affixed to the case of the product to ascertain if the respective codes designate what was specified when you ordered it, referring to the following code table.
SR90 series is based on 3 types of selectable codes SR91, SR92, and SR93/SR94.

### (1) Confirmation of Model Codes

[Example of SR91 model type codes]

**S R 9 1 - 8 Y - 9 0 - 0 N 0**

| | |
|---|---|
| 1. Series | **SR91** |
| 2. Input | **8**: Universal input Thermocouple, R.T.D., Voltage (mV)<br>**4**: Current (mA), **6**: Voltage (V) |
| 3. Control output (1) | **Y**: Contact, **I**: Current, **P**: SSR drive voltage, **V**: Voltage |
| 4. Power supply | **90**: 100 to 240V AC, **08**: 24V AC/DC |
| 5. Event | **0**: None, **1**: Event output |
| 6. Option | **N**: None |
| • Control output (2) | **Y**: Contact, **I**: Current, **P**: SSR drive voltage, **V**: Voltage |
| • Heater break alarm | **1**: Heater break alarm (30A) **2**: Heater break alarm (50A)<br>["1" or "2" is selectable only when control output 1 is Y or P and event output is added] |
| • Analog output | **3**: 0 to 10mV DC, **4**: 4 to 20mA DC, **6**: 0 to 10V DC |
| • Communication | **5**: RS-485 |
| • DI | **8**: DI (set value bias, STBY, or ACT) 1 point |
| 7. Remarks | **0**: Without, **9**: With |

[Example of SR92 model type codes]

**S R 9 2 - 8 Y - N - 9 0 - 0 0 0 0**

| | |
|---|---|
| 1. Series | **SR92** |
| 2. Input | **8**: Universal input Thermocouple, R.T.D., Voltage (mV)<br>**4**: Current (mA), **6**: Voltage (V) |
| 3. Control output (1) | **Y**: Contact, **I**: Current, **P**: SSR drive voltage, **V**: Voltage |
| 4. Control output (2) | **N**: None, **Y**: Contact, **I**: Current, **P**: SSR drive voltage, **V**: Voltage |
| 5. Power supply | **90**: 100 to 240V AC, **08**: 24V AC/DC |
| 6. Event | **0**: None, **1**: Event output |
| Event output + heater break alarm | **2**: Event output + heater break alarm 30A<br>**3**: Event output + heater break alarm 50A<br>["2" or "3" is selectable only when control output 1 is Y or P.] |
| 7. Analog output | **0**: None, **3**: 0 to 10mV DC, **4**: 4 to 20mA DC, **6**: 0 to 10V DC |
| 8. Communication or DI | **0**: None, **5**: RS-485, **7**: RS-232C<br>**8**: DI (set value bias, STBY, or ACT) 1 point |
| 9. Remarks | **0**: Without, **9**: With |

[Example of SR93/SR94 model type codes]

**S R 9 3 - 8 Y - N - 9 0 - 0 0 0 0**

| | |
|---|---|
| 1. Series | **SR93 or SR94** |
| 2. Input | **8**: Universal input Thermocouple, R.T.D., Voltage (mV)<br>**4**: Current (mA), **6**: Voltage (V) |
| 3. Control output (1) | **Y**: Contact, **I**: Current, **P**: SSR drive voltage, **V**: Voltage |
| 4. Control output (2) | **N**: None, **Y**: Contact, **I**: Current, **P**: SSR drive voltage, **V**: Voltage |
| 5. Power supply | **90**: 100 to 240V AC, **08**: 24V AC/DC |
| 6. Event | **0**: None, **1**: Event output |
| Event output + heater break alarm | **2**: Event output + heater break alarm 30A<br>**3**: Event output + heater break alarm 50A<br>["2" or "3" is selectable only when control output 1 is Y or P.] |
| 7. Option | **00**: None |
| • Analog output | **30**: 0 to 10mV DC, **40**: 4 to 20mA DC, **60**: 0 to 10V DC |
| • DI | **08**: DI (set value bias, STBY, or ACT) 1 point |
| • Analog output + DI | **38**: 0 to 10mV DC + DI (set value bias, STBY, or ACT) 1 point<br>**48**: 4 to 20mA DC + DI (set value bias, STBY, or ACT) 1 point<br>**68**: 0 to 10V DC + DI (set value bias, STBY, or ACT) 1 point |
| • Communication | **05**: RS-485, **07**: RS-232C |
| 8. Remarks | **0**: Without, **9**: With |

### (2) Confirmation of Accessories

| | |
|---|---|
| This instruction manual | 1copy |
| The Communication interface instruction manual (in case optional communication function is added) | 1copy |
| Unit seals | 1 sheet |
| Current detector for heater break alarm (CT) (in case optional heater break alarm function is added) | |
| For 30A: Model CTL-6-S | 1 pc. |
| For 50A: Model CTL-12-S36-8 | 1 pc. |

NOTE: For any problem with the product, shortage of accessories or request for information, please contact our agent or our sales office in your neighborhood.

## 2-2. Handling Instruction

Do not operate the keys on the front panel with a hard or sharply pointed object. Operate the keys only by softly touching them by your fingertips.

When cleaning the instrument, wipe it gently with a dry cloth. Never use solvent such as a thinner.

# 3. Installation and Wiring

## 3-1. Installation Site (environmental conditions)

### ⚠ CAUTION

This instrument should not be used in any of the places mentioned below.
Selection of these places may result in trouble with the instrument, damage to it or even a fire.

① Where flammable gas, corrosive gas, oil mist and particles that can deteriorate electrical insulation are generated or abundant.
② Where the temperature is below −10°C or above 50°C.
③ Where the relative humidity is above 90%RH or below the dew point.
④ Where highly intense vibration or impact is generated or transferred.
⑤ Near high voltage power lines or where inductive interference can affect the operation of the instrument.
⑥ Where the instrument is exposed to dew drops or direct sunlight.
⑦ Where the height is above 2000 m.
⑧ Outdoors.

NOTE: The environmental conditions belong to the installation category II of IEC60664 and the degree of pollution is 2.

## 3-2. Mounting

### ⚠ CAUTION

For safety's sake and to protect the functionality of the product, do not draw out its body from the case.
If it needs to be drawn out for replacement or repair, call our agent or our sales office in your neighborhood.

① Cut a hole for mounting the controller in the panel by referring to the cutout drawing in Section 3-3.
② The panel thickness should be 1.0 to 4.0 mm.
③ As the instrument is provided with pawls for fixing, just press it firmly from the front of the panel.
④ The SR90 series instrument is designed in a panel-mounting mode. Never use it without mounting on the panel.

## 3-3. External Dimensions and Panel Cutout

### SR91

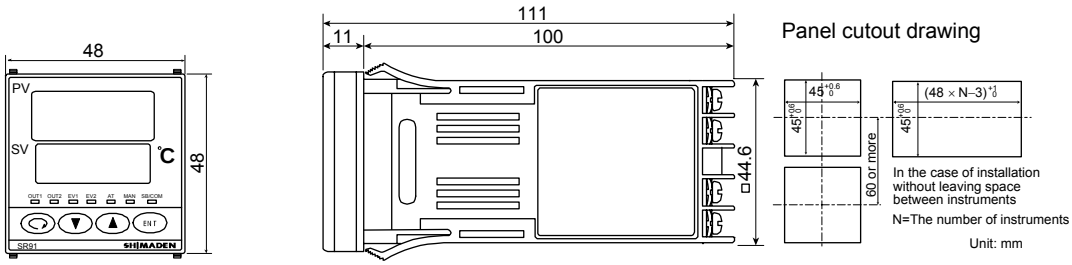


### SR92

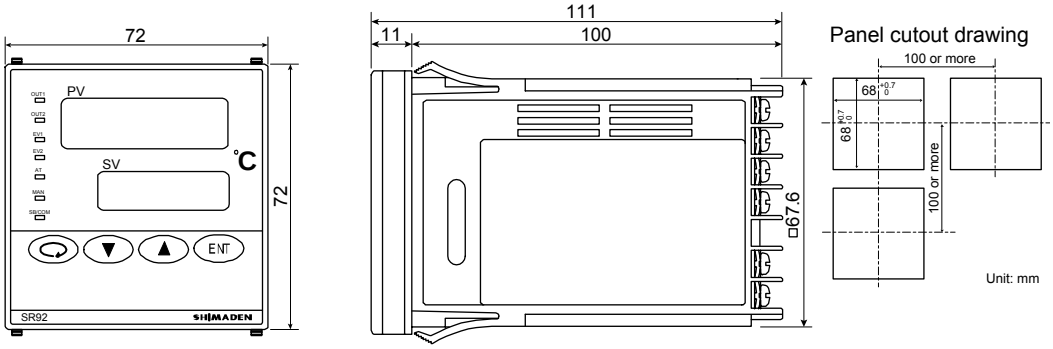


### SR93

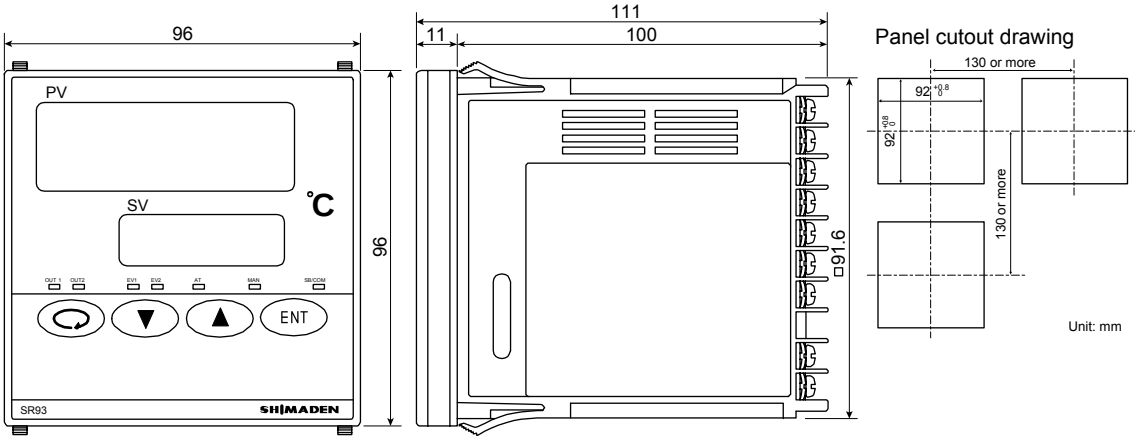


### SR94

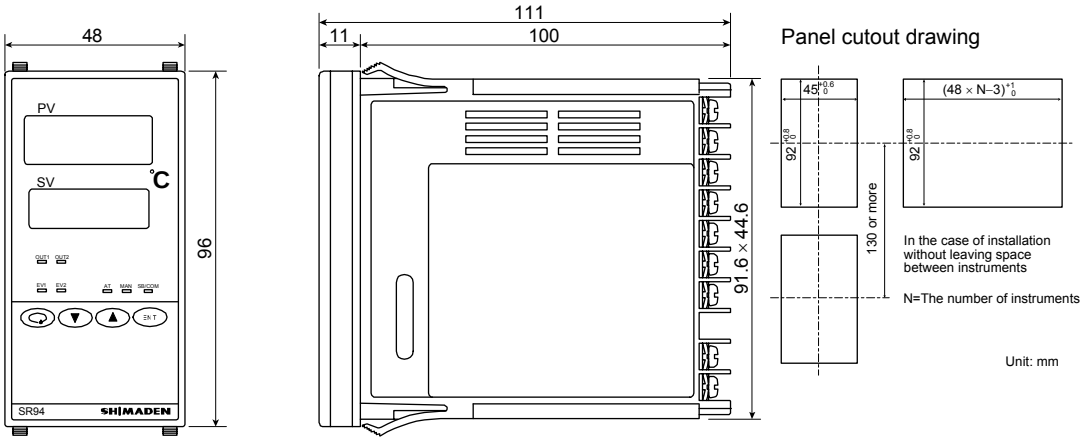

**External dimensions of current detectors (CT) of heater break alarm**

For 0 to 30 A (CTL-6-S)

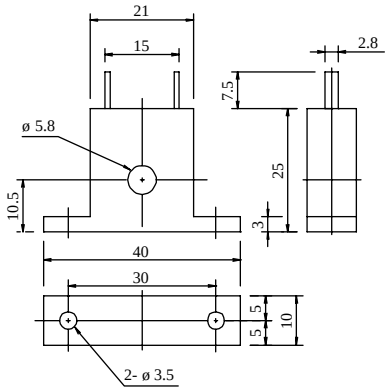


For 0 to 50 A (CTL-12-S36-8)

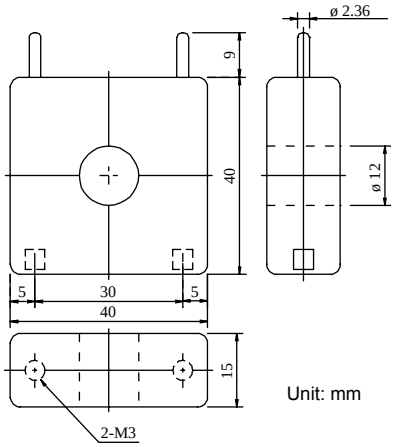


Unit: mm

## 3-4. Wiring

### ⚠ WARNING

- Make sure to disconnect this product from any power source during the wiring operation to prevent an electric shock.
- Be certain that the protective conductor terminal (⏚) is properly grounded. Otherwise, an electric shock may result.
- Do not touch wired terminals and other charged elements while they are being energized in order to prevent an electric shock.

Please pay attention the following;

① In the wiring operation, follow the terminal layout shown in Section 3-5 and the terminal arrangement in Section 3-6 and make sure to carry out the correct wiring process.
② Use ring tongue terminals that fit an M3.5 screw and have a width of 7 mm or less.
③ In the case of thermocouple input, use a compensating lead wire compatible with the selected type of thermocouple.
④ In the case of R.T.D. input, the resistance of a single lead wire must be 5Ω or less and the three wires must have the same resistance.
⑤ The input signal wire must not be accommodated with a high-voltage power cable in the same conduit or duct.
⑥ Shield wiring (single point grounding) is effective against static induction noise.
⑦ Twisting the input wires at short and equal intervals is effective against electromagnetic induction noise.
⑧ In wiring for power supply, use a wire or cable whose performance is equal to or higher than the 600V vinyl insulated wire having a sectional area of 1 $mm^2$ or larger.
⑨ The wire for grounding must have a sectional area of 2 $mm^2$ or larger and must be grounded at a grounding resistance of 100Ω or less.
⑩ Clamp the screws of terminals firmly. Clamping torque: 1.0 N • m (10 kgf • cm)
⑪ If the instrument appears to be easily affected by power supply noise, use a noise filter to prevent malfunctioning. Mount the noise filter on the grounded panel and make the wire connection between the noise filter output and the power line terminals of the controller as short as possible.

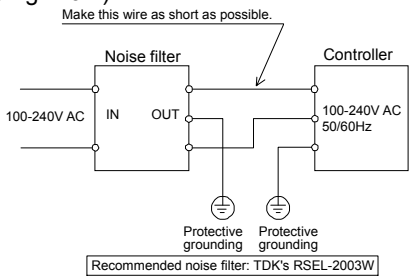


⑫ Connection of current detector (CT)

Insert a load line through the hole of the noise filter meant for the controller. With this wire, connect the secondary side terminal of CT to the CT input terminal of the SR90 series controller.

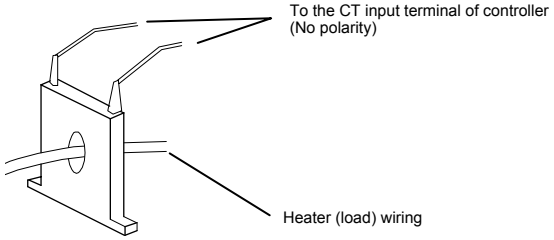

## 3-5. Terminal Layout

Follow the terminal layout and terminal arrangement table shown below in your wiring operation.

**SR91**

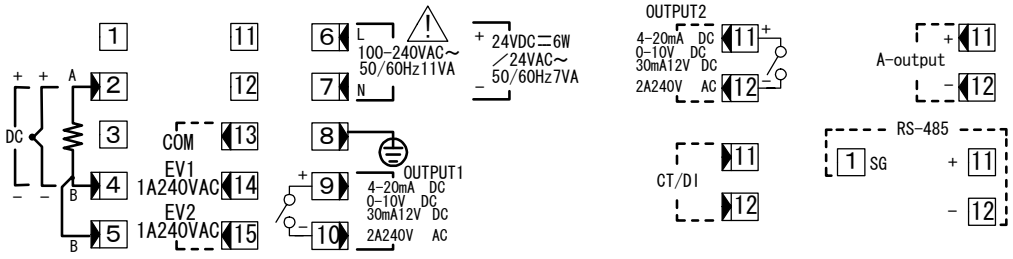


**SR92**

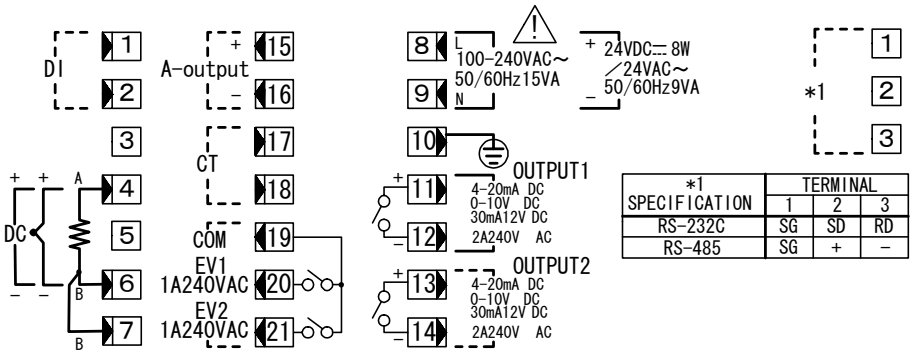


| *1 SPECIFICATION | TERMINAL | | |
|---|---|---|---|
| | 1 | 2 | 3 |
| RS-232C | SG | SD | RD |
| RS-485 | SG | + | - |

**SR93/SR94**

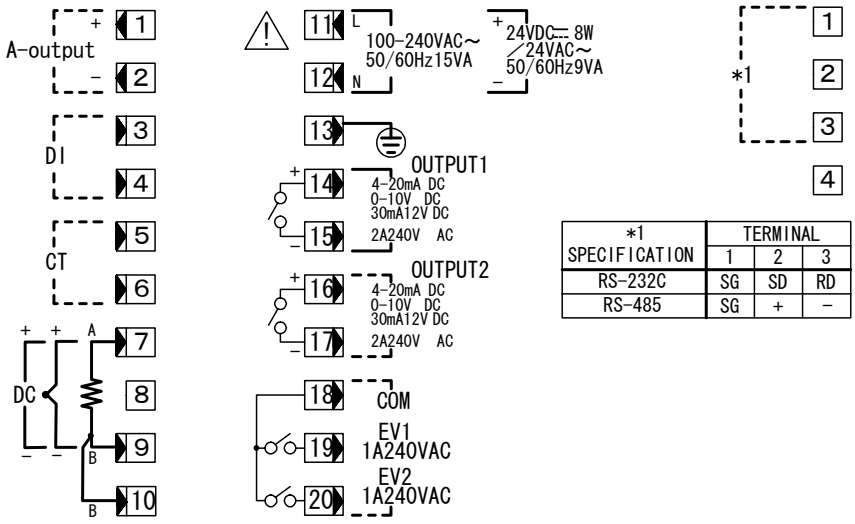


| *1 SPECIFICATION | TERMINAL | | |
|---|---|---|---|
| | 1 | 2 | 3 |
| RS-232C | SG | SD | RD |
| RS-485 | SG | + | - |

## 3-6. Terminal Arrangement Table

| Name of terminal | Description/Code | Terminal No. | | |
|---|---|---|---|---|
| | | SR91 | SR92 | SR93 • 94 |
| Power supply | 100-240V AC/24V AC: L, 24V DC: +<br>100-240V AC/24V AC: N, 24V DC: − | 6<br>7 | 8<br>9 | 11<br>12 |
| Protective conductor | ⏚ | 8 | 10 | 13 |
| Input | R.T.D.: A, thermocouple/voltage/current: +<br>R.T.D.: B, thermocouple/voltage/current: −<br>R.T.D.: B | 2<br>4<br>5 | 4<br>6<br>7 | 7<br>9<br>10 |
| Control output 1 | Contact: NO, SSR drive voltage/Voltage/Current: +<br>Contact: NO, SSR drive voltage/Voltage/Current: − | 9<br>10 | 11<br>12 | 14<br>15 |
| Control output 2 (option) | Contact: NO, SSR drive voltage/Voltage/Current: +<br>Contact: NO, SSR drive voltage/Voltage/Current: − | 11<br>12 | 13<br>14 | 16<br>17 |
| Event output (option) | COM<br>EV1<br>EV2 | 13<br>14<br>15 | 19<br>20<br>21 | 18<br>19<br>20 |
| Heater break (option) | CT input | 11-12 | 17-18 | 5-6 |
| Analog output (option) | +<br>− | 11<br>12 | 15<br>16 | 1<br>2 |
| Communication (option) | RS-232C: SD, RS-485: +<br>RS-232C: RD, RS-485:−<br>SG<br>RS-485: +<br>RS-485: − | <br><br>1<br>11<br>12 | 2<br>3<br>1 | 2<br>3<br>1 |
| DI (option) | | 11-12 | 1-2 | 3-4 |

NOTE:
With thermocouple/voltage/current input, shorting across B and B terminal will cause an error.

NOTE:
The optional functions of the SR90 are subject to the following conditions:

SR91:
Only one of control output 2, heater break alarm, analog output, communication and DI is selectable.

SR92:
Communication and DI are not selectable simultaneously.

SR93/SR94:
Communication and analog output, or communication and DI are not selectable simultaneously.
Simultaneous selection of analog output and DI is possible, though.

## 3-7. Before Starting Operation

To begin with, check the wiring and set the items listed below by the setting methods of the screen groups.
Factory-set items and items already set by equipment manufacturers need not be set here.

1. **Checking of wiring:**
   Check that the wiring to connected terminals is carried out properly. Erroneous wiring will result in burnout.
2. **Application of operating power:**
   Apply operating power. The controller is energized and the data display and other lamps light.
3. **Setting of measuring range:**
   Call the screen 1-51 (measuring range code screen) of the screen group 1 and select and register a code from the measuring range codes. Call the screen 1-52 (temperature unit setting screen) of the screen group 1 and select and register a temperature unit. For current, voltage or mV input, lower/higher limit values and the position of decimal point should be set on the screen 1-53, 1-54 or 1-55 respectively.
4. **Setting of control mode (PID):**
   In the case of ON-OFF (two-position) control, call the screen 1-2 (output 1 proportional band setting screen) of the screen group 1, select OFF and register it. Call the screen 1-3 (output 1 hysteresis setting screen) of the screen group 1, set and register it.
   Follow the same procedure for output 2 if the option is added.
   Omit this setting in the case of AT (Auto Tuning).
5. **Setting of control output characteristics:**
   Call the screen 1-45 (control output characteristic setting screen) of the screen group 1 and select either RA (Reverse Action) or DA (Direct Action) correspondingly to output characteristic specification (Heating/Cooling).
6. **Setting of event type:**
   If the optional event function is added, call the screen 1-21 and/or 1-24 (event alarm type code setting screen) of the screen group 1 and select and register a code.
7. **Setting of analog output:**
   If the optional analog output function is added, call the screen 1-32 (analog output type setting screen) of the screen group 1 and select one from the setting range and register it.
8. **Note on initialization following data change:**
   When the code of measuring range, event type or analog output type is changed, a set value is initialized and resetting is required.

# 4. Names and Functions of Parts on Front Panel

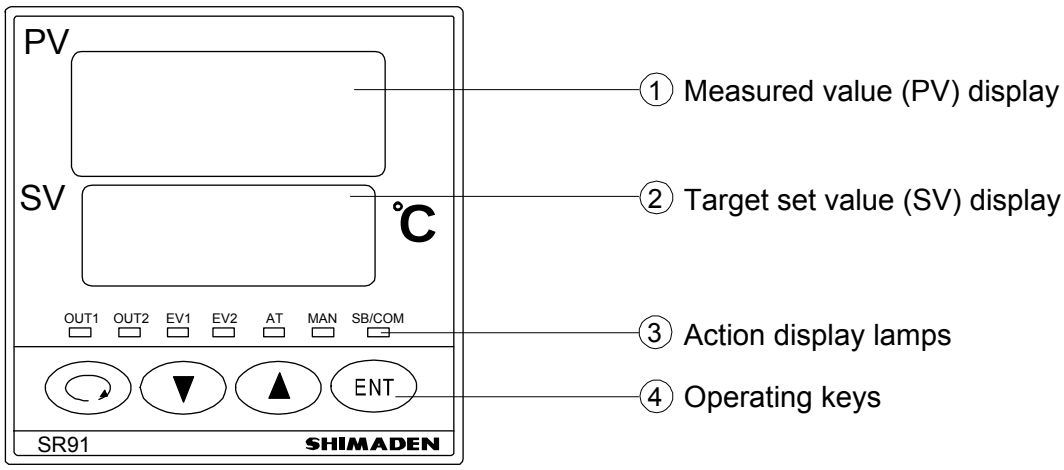


| Name | Function |
|---|---|
| ① Measured value (PV) display: | (1) Present measured value (PV) is displayed on the screen group 0, basic screen and output display screens (OUT1 and OUT2). (red)<br>(2) Type of parameter is shown on each parameter screen.<br>(3) The decimal point at the lowest digit flashes when the controller is in standby (STBY) mode. |
| ② Target set value (SV) display: | (1) Target set value (SV) is displayed on the basic screen of the screen group 0. (green)<br>(2) Present output value is displayed by % on control output monitor screens (OUT1, OUT2) of the screen group 0.<br>(3) Selected item and set value are displayed on each parameter screen. |
| ③ Action display lamps: | (1) Control output indicators: OUT1 and OUT2 (option) (green)<br>- OUT1 lights up when output turns ON and goes out when it turns OFF during contact or SSR drive voltage output.<br>- The brightness changes in proportion to output increase/decrease during current or voltage output.<br>- OUT2 functions only if the option is added.<br>(2) Event output indicators: EV1/EV2 (option) (orange)<br>- Light up when assigned events (including heater break/heater loop alarm) turn ON if event option is added.<br>(3) Auto tuning action indicator: AT (green)<br>- Flashes when ON is selected by ▲ key on the AT action selection screen and AT is executed by ENT key, and goes out when AT terminates automatically or is released.<br>(4) Manual control output action indicator: MAN (green)<br>- Flashes when manual control output is selected on control output display screens (OUT1, OUT2). Goes out when automatic (PID) control output is executed.<br>(5) Set value bias/communication indicator: SB/COM (option) (green)<br>- Lights up when optional DI function is added, SB (set value bias) is assigned to it, and at the time of shorting across the DI terminal (set value bias in action).<br>- Lights up when optional communication function is added and COM mode is selected. Goes out when Local is selected for communication mode. |
| ④ Operating keys: | (1) ◯ (parameter) key<br>- Pressing this key on any screen of the screen group 0 and the screen group 1 calls the next screen onto display.<br>- When pressed continuously for 3 seconds, this key functions to move between the basic screen of screen group 0 and the initial screen of screen group 1.<br>- Pressing this key simultaneously with ENT key in the screen group 1 calls the preceding screen onto display.<br>(2) ▼ (down) key<br>- When pressed on a parameter screen, the decimal point at the lowest digit flashes and the set data decreases or moves backward.<br>(3) ▲ (up) key<br>- When pressed on a parameter screen, the decimal point at the lowest digit flashes and the set data increases or moves forward.<br>(4) ENT (entry/registration) key<br>- Used to register a set data changed by means of ▲ or ▼ key on a parameter screen.<br>- Pressing this key simultaneously with ◯ key on a screen of the screen group 1 calls the preceding screen onto display.<br>- When pressed continuously for 3 seconds on the control output screens (OUT1, OUT2), or pressing ENT + ▲ key functions to switch between automatic output and manual output. |

# 5. Explanation of Screens and Setting

## 5-1. Parameter Flow

Outline of Parameter Flow displayed below. Set parameter according to the explanation of each setting screen.

NOTE: Four kinds of frame lines signify the following:

- Screens regularly shown by key operation and other means
- Screens which may or may not be shown depending on control action modes (PID action or ON-OFF action)
- Screens shown when appropriate options are added or selected
- Screens for monitoring (without automatic return after 3 minutes)

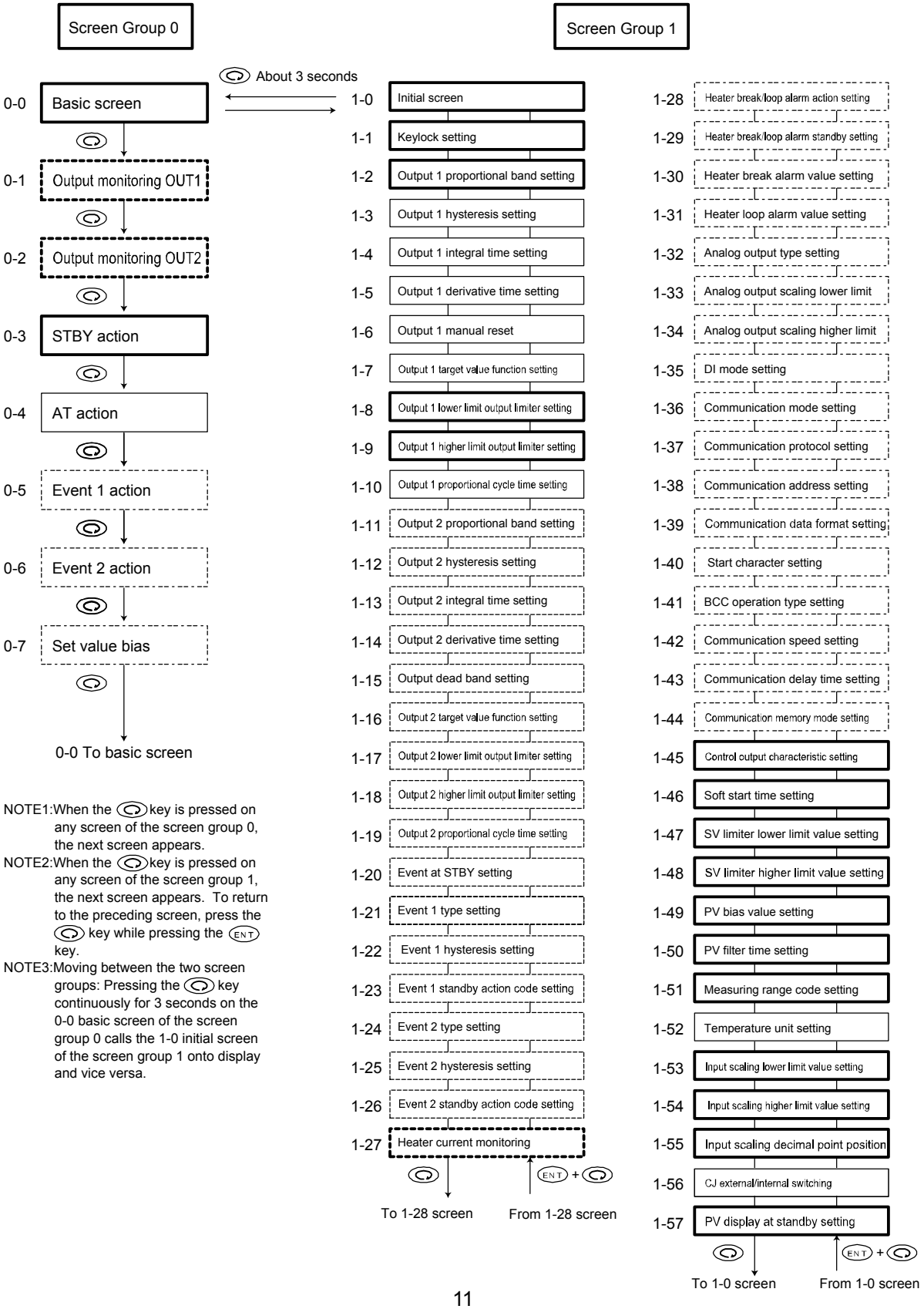


NOTE1: When the key is pressed on any screen of the screen group 0, the next screen appears.

NOTE2: When the key is pressed on any screen of the screen group 1, the next screen appears. To return to the preceding screen, press the key while pressing the ENT key.

NOTE3: Moving between the two screen groups: Pressing the key continuously for 3 seconds on the 0-0 basic screen of the screen group 0 calls the 1-0 initial screen of the screen group 1 onto display and vice versa.

## 5-2. Display upon Power-ON

When power is applied, initial screens upon power-ON are displayed successively, each for about 1 second. Then the basic screen is displayed.

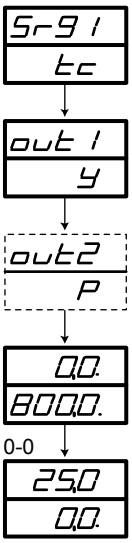


Name of series ( Sr91, Sr92, Sr93, Sr94 )

Input type ( tc: Thermocouple, Pt: R.T.D., mV: Voltage (mV), HV: Voltage (V), mA: Current (mA))

Indicates control output 1.

OUT1 output type ( Y: Contact, P: SSR drive voltage, V: Voltage, I: Current)

Indicates control output 2.

OUT2 output type ( Y: Contact, P: SSR drive voltage, V: Voltage, I: Current)

Lower limit value of selected measuring range.

Higher limit value of selected measuring range.

Basic screen. The starting screen of the screen group 0

Measured value (PV)

Target set value (SV)

The 0-0 basic screen is followed by screens on which various functions are set by means of operating keys.
For the screen sequence, refer to "5-1 Parameter Flow" in the preceding page.

## 5-3. How to Change Screens

**Screen group 0** (the group of screens for setting primarily by the end user)
**Screen group 1** (the group of screens for setting primarily by the manufacturer or equipment manufacturers)

### (1) How to change screens in screen group 0

Every time the ◎ key is pressed, the screen moves to the next and the 0-0 basic screen returns when it is pressed on the last screen.

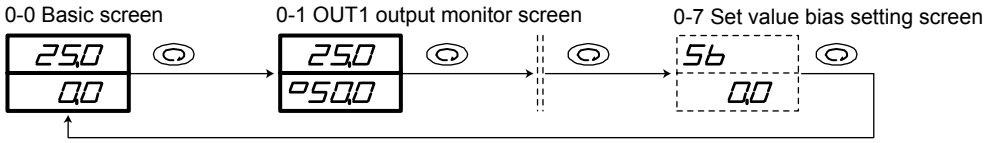


### (2) How to change screen group 0 to/from screen group 1

Pressing the ◎ key continuously for 3 seconds on the basic screen of the screen group 0 calls the 1-0 initial screen of the screen group 1 onto display.
Also by pressing the ◎ key continuously on the 1-0 initial screen of screen group 1 calls the basic screen of screen group 0.

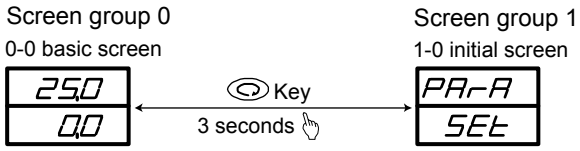


### (3) How to change screen in screen group 1

Starting from the 1-0 initial screen of the screen group 1, every time the ◎ key is pressed, the next screen appears and the1-0 initial screen returns when it is pressed on the last screen.
When holding down the ENT key and pressing the ◎ key in the screen group 1, you can go back to the preceding screen.
When holding down the ENT key and pressing the ◎ key on the 1-0 initial screen, the last screen of this group, i.e., the 1-57 PV display at stndby setting screen appears on the display.

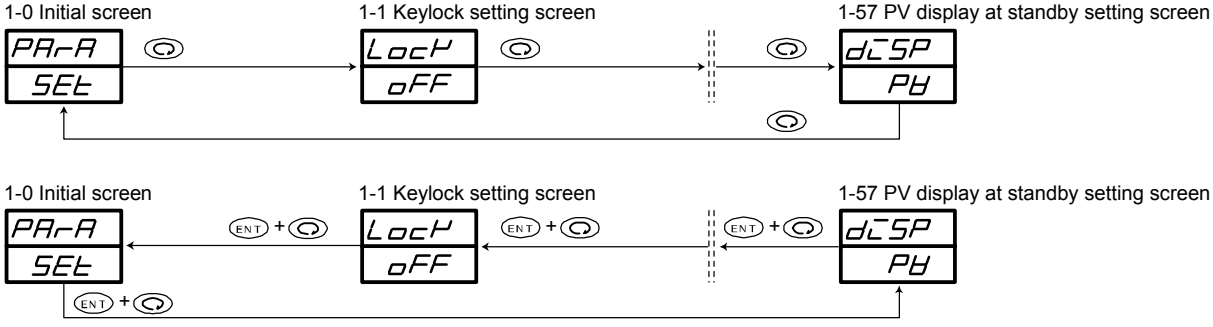

### (4) How to change set values (data)

To change data on a screen, use the ▲ or ▼ key, and register the changed data by pressing the ENT key.

## 5-4. Auto Return Function

If no key is operated for 3 minutes or longer on a screen (except the 0-1 output 1 monitor screen, 0-2 output 2 monitor screen and 1-27 heater current monitor screen), the screen automatically changes to the 0-0 basic screen of the mode 0 screen group. This is called auto return.

## 5-5. Procedure of Setting in Screen Group 0

The flow of setting screens is explained in the following section "6. Explanation of Screen Group and Setting". In this section, the procedure of setting is described.

| Key operation: | Use the ⟲ key to call the next screen. On each setting screen, use the ▲ or ▼ key for selection and the ENT key for registration. Nevertheless, in case the value of manual control output is changed on the output monitor screen, the ENT key need not be pressed. |
|---|---|

### (1) Setting of target set value (SV)

1. To set a target set value (SV), press the ▲ or ▼ key on the 0-0 basic screen. When either of the keys is pressed continuously, the decimal point of the lowermost digit flashes and the numerical value keeps increasing or decreasing. When it reaches a target set value, press the ENT key to register.
2. Once it reaches the target set value, the digit stops flashing.
   Setting of a target set value is not possible while auto tuning (AT) is in execution. AT should be relieved for setting.

**Example: 500.0°C is to be set as a target set value.**

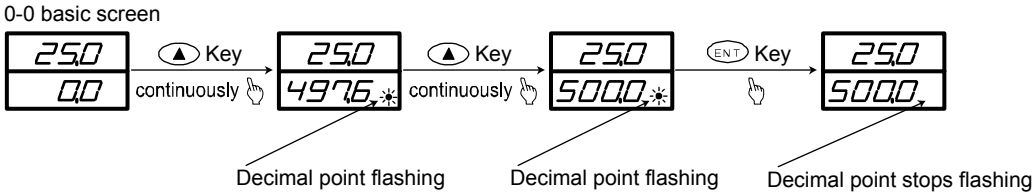


### (2) Manual setting of control output

**1) Switching between automatic output and manual output on output monitor screen (OUT1 and OUT2) and setting:**

To switch auto to manual and vice versa, press the ENT key for 3 seconds continuously, or press the ▲ key while holding the ENT key on the screen 0-1 output 1 monitoring screen or the screen 0-2 output 2 monitoring screen.
Upon turning to manual, the MAN lamp flashes and it remains unlighted during automatic output.
To set a target value at manual output, press the ▲ or ▼ key on the output monitor screen to keep the numerical value increasing or decreasing until a target value is reached.
To release manual output, press the ENT key for 3 seconds continuously, or press the ▲ key while holding the ENT key, and automatic output returns.

① If the output mode of either output 1 or output 2 is changed to manual, the output mode of the other is also changed to manual. Also, if changed to auto, the output of the other will be changed to auto as well.
② In case the output of output 1 is at 100.0%, o99.9 is displayed on the output 1 screen and the decimal point of o flashes.
③ In case the output of output 2 is at 100.0%, o99.9 is displayed on the output 2 screen and the decimal point of o flashes.
④ In case output is of contact or SSR drive voltage and OFF is set for proportional band (P), the value of output will be 0.0% or 100.0%.
⑤ In case output is of voltage or current and OFF is set for proportional band (P), the value of output will be the lower limit value or the higher limit value of a set output limiter.
While auto tuning (AT) is in execution, switching to manual output is not possible. It should be done after releasing AT.

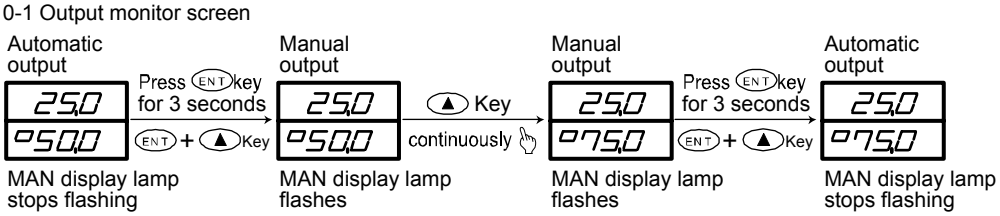

### 2) Supplemtary explanation of using the manual control output

Monitor screens (OUT1 and OUT2) and automatic/manual output:

① When automatic output is changed to manual, balanceless/bumpless transfer is provided, and the value of output right before the change is displayed. Changing from manual to auto also provides balanceless/bumpless transfer, but not if the PV value is outside the proportional band.
② If power supply is shut off and power is applied again, control output continues to be in auto or manual at the time when power supply is shut off.

NOTE:Although a change to another screen in the manual mode is possible, it should be noted that control output is manual in this case. Flashing of the MAN monitor LED indicates that the manual mode is ON.

③ Manual output is released when one of the following parameters is changed:
Range, unit, or higher/lower limit of scaling

## (3) AT (auto tuning)

AT is the function of automatically computing and setting P.I.D. value, the parameters of P.I.D. control.
Computing time differs depending on the details of control.

### 1) Execution of AT

Pressing the ▲ key on the 0-4 AT action control screen, change oFF displayed on the bottom to on and the decimal point of the lowermost digit flashes. Then press the ENT key. The decimal point stops flashing, the AT lamp flashes and AT starts.
When AT is executed, ON-OFF action of output in response to rising and falling of the measured value from the target set value is repeated several times to store PID values internally and AT ends. At the same time control using stored PID values begins and the AT lamp goes out.

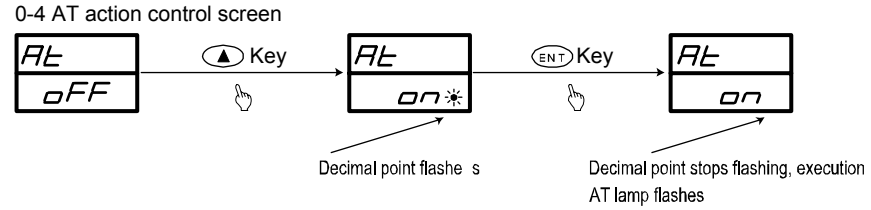


### 2) Stop of AT

To stop AT in the middle of execution, select oFF by using the ▼ key on the 0-4 AT action control screen and by pressing the ENT key, releases the AT and the decimal point and the AT lamp stops flashing.

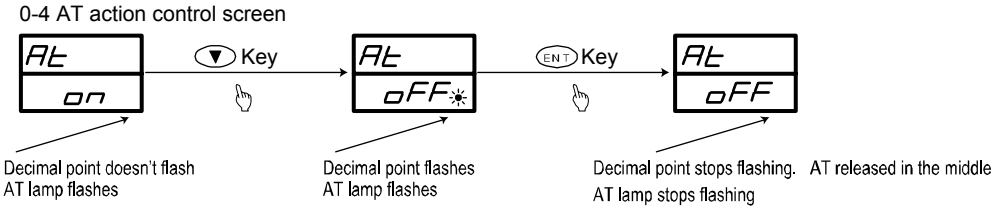


NOTE: In case AT is released in the middle, PID values are not changed.

### 3) Unexecutable conditions of AT

In the following conditions, AT is unable to be executed:

① Control output is in manual. (The AT screen is not displayed.)
② Under STBY mode. (The AT screen is not displayed.)
③ Scaleover of PV (measured value). (The AT screen is not displayed.)
④ OFF is selected for proportional band (P) of output 1. (The AT screen is not displayed.)
⑤ Lock No. 2 or 3 is selected on the keylock screen.

### 4) Automatic stop conditions of AT

If any of the following occur while AT is in execution, AT will be released:

① The output value has been at 0% or 100% continuously for 200 minutes.
② Scaleover of PV value
③ The control execution is changed to standby.

### 5) AT action in two-output specification

AT works as follows up to the RA or DA characteristic in the two-output specifications:

① RA characteristic: PID constants are common to OUT1 and OUT2.
② DA characteristic: AT is executed only for OUT1. While AT is in execution, output of OUT2 is at 0% or the lower limit value of output limiter.

## (4) Standby mode (STBY)

### 1) What is standby mode?

This instrument supports standby mode (STBY), which stops the control operation temporarily.
Switching to/from execution/STBY can be set on the 0-3 STBY action control screen.
When STBY is assigned to DI (external input) on the 1-35 DI mode setting screen, the setting on the screen 0-3 cannot be performed, as DI setting is preferred.

① During STBY, the decimal point of the lowermost digit on the PV display flashes.
② The output value is 0% during STBY.
③ When STBY is selected, AT (auto tuning) is stopped.
④ When STBY is selected in manual control, manual control is released.
⑤ If the power supply is shut off in STBY and power is applied again, STBY is still selected.
⑥ During STBY, event output can be set at enable or disable.
⑦ If set, event standby action can be executed when the instrument is switched from standby (STBY ON) to execution (STBY OFF).

### 2) Event at standby

Event can be set enable or disable on the 1-20 event at STBY setting screen.

| | |
|---|---|
| oFF | Event output disabled (except for status). |
| on | Event output enabled when the specified condition is satisfied.<br>Note that event isn't output in case control mode is selected for event standby action (Code 4 on the screen 1-23 or 1-26). |

If So or Hb is assigned to event type, the event is output even if it is in STBY.

### 3) PV display at standby

PV display at standby can be set on the 1-57 PV display at standby setting screen.

| | |
|---|---|
| PV | During STBY, PV value is displayed on the basic screen and the output monitoring screen. |
| StbY | During STBY, the characters "StbY" are displayed instead of the PV value on the basic screen and the output monitoring screen. |

## (5) Setting of event set value

Before a value is set, an event type should be set as described in the following paragraph, "1) Event type setting". When an event type code is changed, however, all the set values (data) concerning the event are initialized.

### 1) Event type (alarm type) setting

Call the 1-21 event 1 type code setting screen (or the 1-24 for event 2) of the screen group 1 and select one from the type codes Hd, Ld, od, id, HA and LA by pressing the ▲ or ▼ key. Then register it by the ENT key.
There are the following 6 event type (alarm type) codes:

| | | | | | |
|---|---|---|---|---|---|
| Hd | Higher limit deviation | Ld | Lower limit deviation | od | Outside higher/lower limit deviations |
| id | Within higher/lower limit deviations | HA | Higher limit absolute value | LA | Lower limit absolute value |

oFF: None, So: Scaleover, and Hb: Heater break/loop alarm are screen display only.

### 2) Setting of event value

The 0-5 event 1 set value setting screen or the 0-6 event 2 set value setting screen will set. The screen will be displayed when either of the previous 6 types of event is selected.
Set the aimed value by pressing the ▲ or ▼ key on screen (setting range is described below). When the ENT key is pressed to register the set event value, the decimal point stops flashing.

Setting ranges:
- Higher limit deviation value or lower limit deviation value: −1999 to 2000 units
- Outside or within higher/lower limit deviation values: 0 to 2000 units
- Higher limit absolute value or lower limit absolute value: Within measuring range

No event value can be set while AT (auto tuning) is in execution. Set after releasing AT.

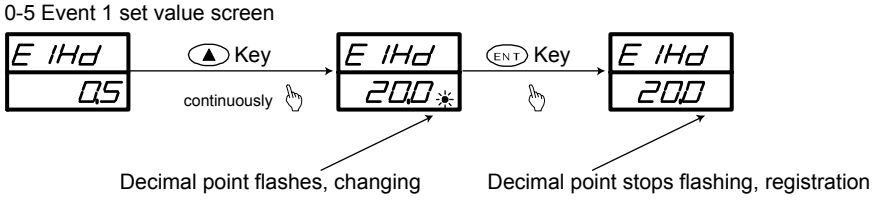


## (6) Set value bias

### 1) Set value bias

As an optional function, additional setting of another target set value is possible.
It is set as a set value bias which indicates a deviation from the target set value.
For instance, when 20°C has been set as the target set and you want to set another set value at 30°C, set the set value bias at +10°C.
The set value bias becomes effective when the DI terminals are shorting.
When the DI terminals are not shorting, the set value bias is not effective.
This function is used conveniently to switch a target value between "summer and winter"/"day and night" and the like.

### 2) Setting of set value bias

In case the optional DI function is added, press the ▲ or ▼ key on the screen 0-7 to set a numerical value of set value bias and register the value by pressing the ENT key.
The decimal point stops flashing.
The set value remains effective while the DI terminals are shorting and is added/subtracted to/from the target set value. When a set value bias is set and it is effective, the SB/COM lamp lights.

Setting range: −1999 to 5000 units

# 6. Explanation of Screen Group and Setting

0-0 Basic screen

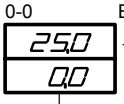


3 seconds

Initial value: Lower limit value of measuring range
Setting range: Within measuring range (within SV limiter)
A measured value (PV) is displayed on the top and the bottom is for display and setting of a target set value (SV).
For details, see Section 5-5 (1).

0-1 Output 1 (OUT1) monitor screen

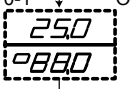


A measured value (PV) is displayed. The bottom is for monitoring of the control output value of output 1 in the automatic mode and for changing a set value in the manual mode.
Manual output setting range: 0.0 ~ 100.0%
(within output 1 limiter)

⊙ Output monitor screens (OUT1 and OUT2) and auto/manual output
- For switching auto to manual and vice versa, the (ENT) key is pressed continuously for 3 seconds or (ENT) + (▲) key on the output 1 or output 2 screen.
- When the output mode (auto or manual) of either output 1 or output 2 is changed, the output mode of the other is also changed.
- When the output is manual the Man lamp flashes.

For details, see Section 5-5 (2).

0-2 Output 2 (OUT2) monitor screen

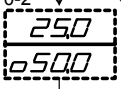


A measured value (PV) is displayed. The bottom is for monitoring of the control output value of output 2 in the automatic mode and for changing a set value in the manual mode.
Manual output setting range: 0.0 ~ 100.0%
(within output 2 limiter)
The screen appears only if the optional function of output 2 is added.
For details, see Section 5-5 (2).

0-3 STBY (standby) action control screen

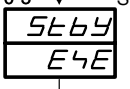


Initial value: EXE
Setting range: STBY, EXE
This screen is only for monitoring when STBY is selected on the 1-35 DI mode setting screen.
Set either the control standby ( StbY ) or execute ( E4E ).
For STBY, see Section 5-5 (4).

0-4 AT (auto tuning) action control screen

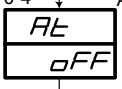


Initial value: OFF
Setting range: OFF, ON
AT is executed when ON is selected and is released when OFF is selected. This screen does not appear during manual output and when OFF is set for proportional band (P) of output 1.
While AT is being executed, key operation other than for releasing AT, setting keylock and switching a communication mode is not possible.
For AT action, see Section 5-5 (3).

**When event option is not selected, 0-7 is displayed.**

0-5 Event 1 (EV1) set value setting screen

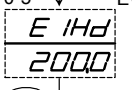


Initial value:
Higher limit deviation value 2000 units
Lower limit deviation value −1999 units
Outside higher/lower deviations or within deviations: 2000 units
Higher limit absolute value: Higher limit value of measuring range
Lower limit absolute value: Lower limit value of measuring range
Setting range:
Higher limit deviation value or lower limit deviation value: −1999 ~ 2000 units
Outside higher/lower limit deviations or within deviations: 0 ~ 2000 units
Higher limit absolute value or lower limit absolute value: Within measuring range
This screen is displayed when the optional event function is added and alarm code is assigned to Hd ~ LA and the action point of the assigned alarm type is set on it.
For details, see Section 5-5 (5).

To the 0-6 screen

0-6 Event 2 (EV2) set value setting screen

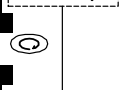


The above description of the 0-5 screen applies to the 0-6 screen, only with a change of EV1 to EV2.

**When Set value bias of DI option is not selected, 0-0 is displayed.**

0-7 Set value bias (SB) setting screen

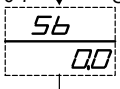


Initial value: 0 unit
Setting range: −1999 ~ 5000 units

This screen is displayed when the optional DI, set value bias function is selected. A set value is effective while the SB,DI terminals are shorted and it is added to or reduced from the set value.
When an SB is effective, the monitor LED lamp SB/COM lights.

To the 0-0 basic screen

1-0 Initial screen

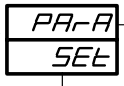


(ENT) + 1-57 To the PV display at standby setting screen

Pressing the key for 3 seconds continuously on the basic screen calls this screen. There is no item to be set on this screen. When the key is pressed, the keylock setting screen, which is the first setting screen, appears. Pressing the key while holding down the (ENT) key calls the last screen, i.e., the PV display at standby setting screen.

To the 1-2 screen

## (1) Setting of keylock

1-1 Key lock setting screen

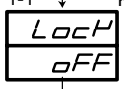


Initial value: OFF
Setting range: OFF, 1, 2, 3

Lock items which you don't want to be changed. Data are unable to be changed on locked screens.
Select OFF to release the lock.

The following table shows lock numbers and ranges to be locked:

| Lock No. | Range to be locked |
|---|---|
| OFF | Release of lock (All data allowed to be changed.) |
| 1 | Keylock for all screens except the screen group 0 and communication mode. |
| 2 | Keylock for all screens except basic screen and communication mode. |
| 3 | Keylock for all screens except communication mode. |

To the 1-2 screen

## (2) Setting of output

1-2 Output 1 propotional band (P) setting screen

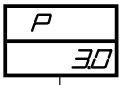


Initial value : 3.0%
Setting range : OFF, 0.1 ~ 999.9 %

Basically setting of this item is not necessary for the execution of auto tuning. For proportional band, refer to Section 8-4 (1).
To change to ON-OFF (two-position) action, select OF F.

When P is not OFF on 1-2, 1-4 is displayed.

1-3 Output 1 hysteresis setting screen

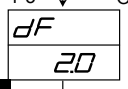


Initial value : 20 units
Setting range : 1 ~ 999 units
Set the "Hysteresis" of ON-OFF action. This screen is displayed only when OFF is selected for "P=OFF" on the preceding 1-2 screen.

When P=OFF is selected on 1-2, 1-8 is displayed.

1-4 Output 1 integral time setting screen

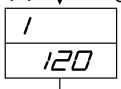


Initial value : 120 seconds
Setting range : OFF, 1 ~ 6000 second s
Basicall y, setting of this item is not necessary when auto tuning is executed.
For integral time, refer to Section 8-4 (2).
This screen is not displayed when P=OFF is selected.

1-5 Output 1 derivative time setting screen.

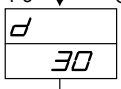


Initial value : 30 seconds
Setting range : OFF, 1 ~ 3600 second s
Basicall y, setting of this item is not necessary when auto tuning is executed.
For integral time, refer to Section 8-4 (3).
This screen is not displayed when P=OFF is selected.

1-6 Output 1 manual reset setting screen

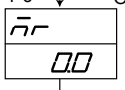


Initial value : 0.0%
−50.0% (in 2-output specification)
Setting range: −50.0% ~ 50.0%
A value for offset correction is set when OFF is selected for I (P action or PD action) .
This screen is not displayed when P=OFF is selected.
Refer to Section 8-4 (4).

1-7 Output 1 target value function setting screen

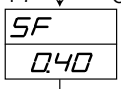


Initial value : 0.40
Setting range : OFF, 0.01 ~ 1.0 0
A value to be used to suppress overshooting or undershooting in expert PID is set.
Setting 1.00 for SF makes overshoot minimum.
When SF=OFF is selected, expert PID does not function and ordinary PID action is carried out.
This screen is not displayed when P=OFF is selected.

1-8 Output 1 lower limit output limiter setting screen

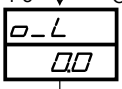


Initial value : 0.0
Setting range : 0.0 ~ 99.9%
A lower limit value of control output 1 is set .
For output limite r, refer to Section 8-5 .

1-9 Output 1 higher limit output limiter setting screen

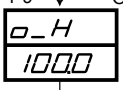


Initial value : 100.0
Setting range : o_L + 0.1 ~ 100.0%
A higher limit value of control output 1 is set .

To the 1-10 scree n

For V, mV, mA output, 1-11 is displayed.

1-10 Output 1 proportional cycle time setting screen

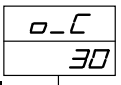


Initial value : Contact output : 30 seconds
SSR drive voltage output : 3 seconds
Setting range : 1 ~ 120 seconds.
Proportional cycle time of control output 1 is set.
The screen is not displayed for voltage or current output.
For proportional cycle time, refer to Section 8-6.

When output 2 is not selected, 1-20 is displayed.

1-11 Output 2 (OUT2) proportional band (P) setting screen

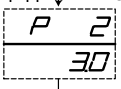


Initial value : 3.0%
Setting range : OFF, 0.1 ~ 999.9 %
The same as the output 1 (OUT1) proportional band (P) setting screen.
This screen is displayed when the optional output 2 function is added.

When P2 is not OFF on 1-11, 1-13 is displayed.

1-12 Output 2 hysteresis setting screen

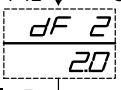


Initial value : 20 units
Setting range : 1 ~ 999 units
"Hysteresis" for ON-OFF action is set.
This screen is displayed only when P2=OFF is selected on the preceding 1- 11 screen.

When P2=OFF is selected on 1-11,1-15 is displayed.

1-13 Output 2 integral time setting screen

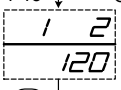


Initial value : 120 seconds
Setting range : OFF, 1 ~ 6000 second s
The same as the output 1 integral time setting screen.

1-14 Output 2 derivative time setting screen.

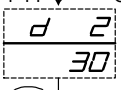


Initial value : 30 seconds
Setting range : OFF, 1 ~ 3600 second s
The same as the output 1 derivative time setting screen.

1-15 Output deadband setting screen

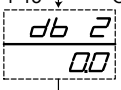


Initial value : 0 unit
Setting range: −1999 ~ 5000 units
The position of the action output 2 against the target set value (SV) is set.
For dead band, refer to section 8-7.

When P2=OFF is selected on 1-11,1-17 is displayed.

1-16 Output 2 target value function setting screen

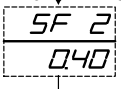


Initial value : 0.40
Setting range : OFF, 0.01 ~ 1.0 0
The same as the output 1 target value function setting screen.

When output 2 is not selected, 1-20 is displayed.

1-17 Output 2 lower limit output limiter setting screen

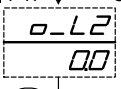


Initial value : 0.0
Setting range : 0.0 ~ 99.9%
A lower limit value of control output 2 is set .

1-18 Output 2 higher limit output limiter setting screen

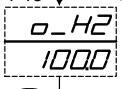


Initial value : 100.0
Setting range : o_L2 + 0.1 ~ 100.0%
A higher limit value of control output 2 is set .

1-19 Output 2 proportional cycle time setting screen

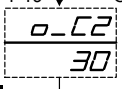


Initial value : Contact output : 30 seconds
SSR drive voltage output : 3 seconds
Setting range : 1 ~ 120 seconds.
Proportional cycle time of control output 2 is set.

To the 1-20 scree n

When event option is not selected, 1-27 is displayed.

## (3) Setting of events

Please refer to section 8-1, 8-2 and 8-3.

1-20 Event at STBY setting screen

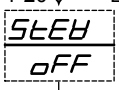


Initial value: OFF
Setting range: OFF, ON
Set whether specified event is enabled or disabled during standby. For details, refer to Section 5-5 (4).

1-21 Event 1 type code setting screen

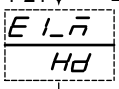


Initial value: Hd
Setting range: OFF, Hd, Ld, od, id, HA, LA, So, Hb
The type of event to be selected as event 1 is selected from the following code table.

**Table of Event Type (Alarm Type) Codes**

| Code | Type of event | Remarks |
|---|---|---|
| oFF | No selection | |
| Hd | Higher limit deviation | Initial value of event 1 |
| Ld | Lower limit deviation | Initial value of event 2 |
| od | Outside higher/lower limit deviations | |
| id | Within higher/lower limit deviations | |
| HA | Higher limit absolute value | |
| LA | Lower limit absolute value | |
| So | Scaleover | Standby action is invalid. |
| Hb | Heater break/loop alarm | Displayed only when the option is added. |

1-22 Event 1 hysteresis setting screen

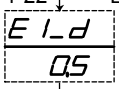


Initial value: 5 units
Setting range: 1 ~ 999 units
ON-OFF hysteresis is set for event 1.
This screen is displayed when an alarm type code is selected from Hd, Ld, od, id, HA, LA.

1-23 Event 1 standby action code setting screen

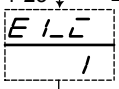


Initial value: 1
Setting range: 1, 2, 3, 4
An event 1 standby action type code is selected from the following table.
This screen is displayed when an alarm type code is selected from Hd, Ld, od, Ld, HH, LH.

**Table of Standby Action Codes (1-23, 1-26)**

| Code | Description |
|---|---|
| 1 | Without standby function |
| 2 | Standby action when power is applied or when STBY is switched ON to OFF. |
| 3 | Standby action when power is applied, when STBY is switched ON to OFF, or when SV in execution is changed. |
| 4 | Control mode (without standby) |

1-24 Event 2 type code setting screen

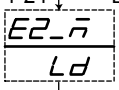


Initial value: Ld
Setting range: OFF, Hd, Ld, od, id, HA, LA, So, Hb
The type of alarm to be selected as event 2 is selected from the table of codes.

1-25 Event 2 hysteresis setting screen

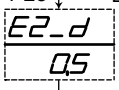


Initial value: 5 units
Setting range: 1 ~ 999 units
ON-OFF hysteresis is set for event 2.
This screen is displayed when an alarm type code is selected from Hd, Ld, od, id, HA, LA.

1-26 Event 2 standby action code setting screen

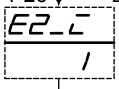


Initial value: 1
Setting range: 1, 2, 3, 4
An event 2 standby action type code is selected from the table of 1-23.
This screen is displayed when an alarm type code is selected from Hd, Ld, od, id, HA, LA.

To the 1-27 screen

When heater break alarm option is not selected, 1-32 is displayed.

## (4) Setting of Heater break/loop alarm

1-27 Heater current monitor screen

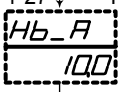


This screen is displayed when the optional heater break/loop alarm function is added and used to monitor heater current. (There is no item to be set on this screen.)
--- is displayed when stable current value has not been gained.

NOTE:
Heater break/loop alarm works on output 1.
Heater break/loop alarm is selectable as event 1 or event 2.
Heater break/loop alarm is assignable in case output 1 is of contact or SSR drive voltage.

As this screen is for monitoring only, auto return does not function.

1-28 Heater break/loop alarm action setting screen

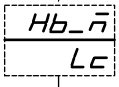


Initial value: Lc
Setting range: Lc, rE

Lc (Lock mode) In this mode, once a break or loop alarm is output, the alarm output is maintained until OFF is selected on the heater break or loop alarm value setting screen or the power supply is cut.

rE (Real mode) An alarm is turned ON or OFF according to a rise or fall of the value of current from a set value. The hysteresis for the release of alarm output is fixed to 0.2A.

1-29 Heater break/loop standby action setting screen

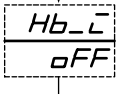


Initial value: OFF
Setting range: OFF, ON
When ON is set, alarm output is withheld or kept to be on standby until the current value enters its normal range once even if the current at the time of applying power is such that an alarm should be output.

1-30 Heater break alarm value setting screen

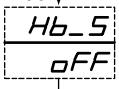


Initial value: OFF
Setting range:OFF, 0.1 ~ 50.0A
Heater current is detected by CT while control output is ON. Lower current than a set value of current is taken as abnormal and an alarm is output.

1-31 Heater loop alarm value setting screen

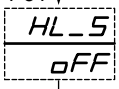


Initial value: OFF
Setting range: OFF, 0.1 ~ 50.0A
Heater current is detected by CT while control output is OFF. Higher current than a set value of current is taken as abnormal and an alarm is output.

When analog output option is not selected, 1-35 is displayed.

## (5) Setting of analog output type

1-32 Analog output type setting screen

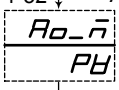


Initial value: PV
Setting range: PV, SV, out 1, out2
An item intended to be output as an analog signal is selected from 4 items: Measured value (PV), target set value (SV), control output 1 (OUT1) and control output 2 (OUT2).

1-33 Analog output scaling lower limit setting screen

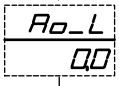


Initial value: 0.0 (The lower limit value of setting range for PV and SV. 0.0 for OUT1 and OUT2.)
Setting range: Within measuring range when PV/SV is selected.
0.0 ~ 100.0% when OUT1 or OUT2 is selected.
A minimum value (0mV, 4mA or 0V) of analog output signal is set as the lower limit value of scaling for an intended output value.

To the 1-34 screen

When analog output option is not selected, 1-35 is displayed.

1-34 Analog output scaling higher limit setting screen

Ao_H
800.0

Initial value: 800.0 (The higher limit value of setting range for PV/SV and 100.0 for OUT1 and OUT2.)
Setting range: Within measuring range when PV or SV is selected. 0.0 ~ 100.0% when OUT1 or OUT2 is selected.)
A maximum level (10mV, 20mA or 10V) of analog output signal is set as the higher limit value of scaling for an intended output value.
Reverse scaling (Ao_L>Ao_H) is also possible.
(H-L = ±1 count or above)

The following diagrams show analog output characteristics by scaling:

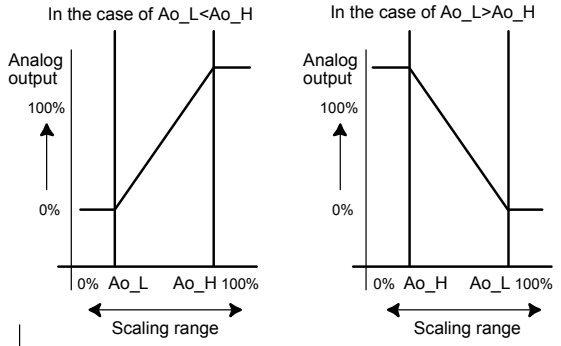


## (6) Setting of DI

When DI output option is not selected, 1-36 is displayed.

1-35 DI mode setting screen

dI
Sb

Initial value: SB
Setting range: NON, SB, STBY, ACT
External input (DI) type is set in accordance with the intended use.
For DI, refer to Section 8-8.

## (7) Setting of communication

For the communication function, refer to the Communication Instruction Manual provided separately.

When communication option is not selected, 1-45 is displayed.

1-36 Communication mode setting screen

comm
Loc

Initial value: Loc (local)
Setting range: Loc, Com (com)
Only a change from Com to Loc is possible by operating keys.
Communication is enabled in the mode displayed on the bottom.

1-37 Communication protocol setting screen

Prot
Shim

Initial value: Shim
Setting range: Shim (Shimaden protocol), asc (MODBUS ASCII protocol), rtu (MODBUS RTU protocol)
A communication protocol is set.

1-38 Communication address setting screen

Addr
1

Initial value: 1
Setting range: 1 ~ 255
A machine number is set in case two or more controllers are connected through communication.

1-39 Communication data format setting screen

dAtA
7E1

Initial value: 7E1
Setting range: 7E1, 7E2, 7N1, 7N2,8E1, 8E2, 8N1, 8N2
A communication data format is set.

| Code | Data length | Parity | Stop bit | Shimaden | ASCII | RTU |
|---|---|---|---|---|---|---|
| 7E1 | 7 bits | Even | 1 bit | ○ | ○ | — |
| 7E2 | 7 bits | Even | 2 bits | ○ | ○ | — |
| 7n1 | 7 bits | None | 1 bit | ○ | ○ | — |
| 7n2 | 7 bits | None | 2 bits | ○ | ○ | — |
| 8E1 | 8 bits | Even | 1 bit | ○ | — | ○ |
| 8E2 | 8 bits | Even | 2 bits | ○ | — | ○ |
| 8n1 | 8 bits | None | 1 bit | ○ | — | ○ |
| 8n2 | 8 bits | None | 2 bits | ○ | — | ○ |

○ Support
— Not Support

To the 1-40 screen

1-40 Start character setting screen

ScHA
StX

Initial value: StX
Setting range: StX, AtE
Which of StX (STX) and AtE (@) is used as the start character of communication format is set.
This is used for Shimaden protocol only.

1-41 BCC operation type setting screen

bcc
1

Initial value: 1
Setting range: 1, 2, 3, 4
An operation type for error detection BCC check is set from 1 to 4 shown in the following table:
This is used for Shimaden protocol only.

Table of BCC Operation Types

| Type of Operation | Description |
|---|---|
| 1 | Add operation from start character to text end character |
| 2 | 2's complement after add operation from start character to text end character |
| 3 | Exclusive OR operation immediately after start character to text end character |
| 4 | Without BCC operation |

1-42 Communication speed setting screen

bPS
1200

Initial value: 1200
Setting range: 1200, 2400, 4800, 9600, 19200 bps
A communication speed is set but 19200 bps is displayed as 1920 because of limitation in the number of digits.

1-43 Communication delay time setting screen

dELY
20

Initial value: 20
Setting range: 1 ~ 100
Time lag from receiving a communication command to transmission is set.
Delay time = Set value × 0.512 msec

1-44 Communication memory mode setting screen

nEn
EEP

Initial value: EEP
Setting range: EEP, rAm, r_E
A mode of writing data in EEPROM and RAM in communication is set.

| Type | Writing Process |
|---|---|
| EEP | Writing entirely in EEPROM |
| rAm | Writing entirely in RAM |
| r_E | Writing OUT1 and OUT2 in RAM and others in EEPROM |

To the 1-45 screen

## (8) Setting of control output characteristic

1-45 Control output characteristic setting screen

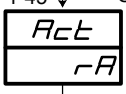


Initial value: rA
Setting range: rA, dA
Characteristic of control output is set.
In case the set value of the 1-35 DI mode setting screen is ACT, this screen is only for display.
The following table shows output characteristics of the one-output specification and the two-output specification.

| Output specification | Characteristic | OUT 1 | OUT 2 |
|---|---|---|---|
| 1-output | RA | Heating | None |
| | DA | Cooling | None |
| 2-output | RA | Heating | Cooling |
| | DA | Heating | Heating |

For control output characteristic, refer to Section 8-7.

## (9) Setting of soft start time

1-46 Soft start setting screen

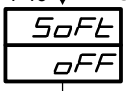


Initial value: OFF
Setting range: OFF, 1 ~ 100 seconds
Soft start time for changing output gradually is set.
Soft start does not function when OFF is set.
For details, see Section 8-9.

## (10) Setting of SV limiter

1-47 SV limiter lower limit value setting screen

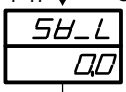


Initial value: Lower limit value of measuring range
Setting range: Measuring range lower limit value ~ higher limit value - 1 count
In case a narrower setting range of target value than a measuring range is used, a lower limit value is set.
(It can prevent erroneous setting in a risky range and has some other advantageous effect.)

1-48 SV limiter higher limit value setting screen

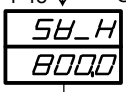


Initial value: Higher limit value of measuring range
Setting range: Measuring range lower limit value ~ higher limit value + 1 count
In case a narrower setting range of target value than a measuring range is used, a higher limit value is set.
(It can prevent erroneous setting in a risky range and has other advantageous effect.)

NOTE:
An SV limiter is set so as to be SV limiter lower limit value < SV limiter higher limit and priority is given to the lower limit value. Therefore, a higher limit cannot be set at a smaller value than a lower limit value + 1 count.

The setting value of Sc_L and Sc_H overwrite SV_L and SV_H value respectively as they are given priority over SV_L and SV_H.

## (11) Setting of PV bias value

1-49 PV bias value setting screen

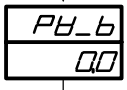


Initial value: 0 unit
Setting range: −1999 ~ 2000 units
This value is used to correct an input error from a sensor or the like.
When a bias is used, control is also carried out with a corrected value.

## (12) Setting of PV filter time

1-50 PV filter time setting screen

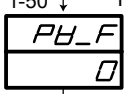


Initial value: 0 second
Setting range: 0 ~ 100 seconds
In case input changes conspicuously or noise continues, PV filter is used to mitigate such undesirable effect.
When 0 second is set, filter does not function.

To the 1-51 screen

## (13) Setting of measuring range code

1-51 Measuring range code setting screen

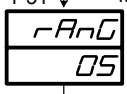


Initial value: Universal 05, voltage 86, current 92
Setting range: Select from the Table of Measuring Range Codes in Section 7.
Each code represents a combination of an input type and a measuring range.

## (14) Setting of temperature unit

1-52 Temperature unit setting screen

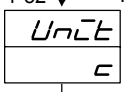


Initial value: C
Setting range: C, F
Select C (°C) or F (°F) as the unit of temperature for sensor input.
This screen is not displayed when linear input (mV, V or mA) is selected.

## (15) Setting of input scaling

1-53 Input scaling lower limit value setting screen

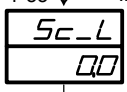


Initial value: 0.0
Setting range: −1999 ~ 9989 units
A lower limit value of scaling of linear input (mV, V or mA) is set
For sensor input, the screen is for monitoring only and setting is not possible.

1-54 Input scaling higher limit value setting screen

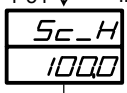


Initial value: 100.0
Setting range: Sc_L + 10 ~ Sc_L + 5000
A higher limit value of scaling of linear input (mV, V or mA) is set
For sensor input, the screen is for monitoring only and setting is not possible.

NOTE:
If input scaling higher/lower limits is set to make difference between the higher and lower limit values less than +10 counts or more than +5000 counts, the higher limit value is automatically changed to make the difference +10 counts or +5000 counts.
A higher limit value which is smaller than a lower limit value +10 counts or larger than a lower limit value +5000 counts is unable to be set.

1-55 Input scaling decimal point position setting screen

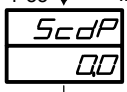


Initial value: One decimal place (0.0)
Setting range: No decimal place (0) ~ 3 decimal places (0.000)
The position of decimal point for input scaling is set.
For sensor input, this screen is for monitoring only and setting is not possible.

## (16) Setting of CJ (Cold Junction)

When TC input is not specified, 1-57 is displayed.

1-56 CJ external/internal switching setting screen

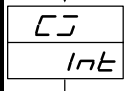


Initial value: Int
Setting range: Int, E4t
Switch the use of thermocouple's CJ internally or externally.
Int Internal CJ E4t External CJ
This screen is displayed when thermocouple input is selected.

## (17) Setting of PV display at STBY

1-57 PV display at standby setting screen

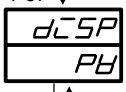


Initial value: PV
Setting range: PV, Stby
Set whether or not PV value is displayed.
PV PV value is displayed.
Stby The character "Stby" is displayed instead of PV value.

ENT + 

From the 1-0 initial screen of the screen group 1

To the 1-0 initial screen of the screen group 1

# 7. Table of Measuring Range Codes

Select a measuring range from the following table.
A change of the code will initialize all date related to the measuring range.

| Input type | | | | Code | Measuring range (°C) | Measuring range (°F) |
|---|---|---|---|---|---|---|
| Universal Input | Thermocouple | B *1 | | 01 | 0 ~ 1800 | 0 ~ 3300 |
| | | R | | 02 | 0 ~ 1700 | 0 ~ 3100 |
| | | S | | 03 | 0 ~ 1700 | 0 ~ 3100 |
| | | K | | 04 *2 | −199.9 ~ 400.0 | −300 ~ 750 |
| | | | | 05 | 0.0 ~ 800.0 | 0 ~ 1500 |
| | | | | 06 | 0 ~ 1200 | 0 ~ 2200 |
| | | E | | 07 | 0 ~ 700 | 0 ~ 1300 |
| | | J | | 08 | 0 ~ 600 | 0 ~ 1100 |
| | | T | | 09 *2 | −199.9 ~ 200.0 | −300 ~ 400 |
| | | N | | 10 | 0 ~ 1300 | 0 ~ 2300 |
| | | PL II *3 | | 11 | 0 ~ 1300 | 0 ~ 2300 |
| | | WRe5-26 *4 | | 12 | 0 ~ 2300 | 0 ~ 4200 |
| | | U *5 | | 13 *2 | −199.9 ~ 200.0 | −300 ~ 400 |
| | | L *5 | | 14 | 0 ~ 600 | 0 ~ 1100 |
| | | Kelvin | K | 15 *6 | 10.0 ~ 350.0 K | 10.0 ~ 350.0 K |
| | | | AuFe-Cr | 16 *7 | 0.0 ~ 350.0 K | 0.0 ~ 350.0 K |
| | | | K | 17 *6 | 10 ~ 350 K | 10 ~ 350 K |
| | | | AuFe-Cr | 18 *7 | 0 ~ 350 K | 0 ~ 350 K |
| | R.T.D. | Pt100 | | 31 | −200 ~ 600 | −300 ~ 1100 |
| | | | | 32 | −100.0 ~ 100.0 | −150.0 ~ 200.0 |
| | | | | 33 | −50.0 ~ 50.0 | −50.0 ~ 120.0 |
| | | | | 34 | 0.0 ~ 200.0 | 0.0 ~ 400.0 |
| | | JPt100 | | 35 | −200 ~ 500 | −300 ~ 1000 |
| | | | | 36 | −100.0 ~ 100.0 | −150.0 ~ 200.0 |
| | | | | 37 | −50.0 ~ 50.0 | −50.0 ~ 120.0 |
| | | | | 38 | 0.0 ~ 200.0 | 0.0 ~ 400.0 |
| | mV | −10 ~ 10mV | | 71 | Initial value: 0.0 ~ 100.0<br>Input scaling setting range: −1999 ~ 9999<br>Span: 10 ~ 5000 counts<br>Position of decimal point: None 1, 2 or 3 decimal places<br>Lower limit value < higher limit value | |
| | | 0 ~ 10mV | | 72 | | |
| | | 0 ~ 20mV | | 73 | | |
| | | 0 ~ 50mV | | 74 | | |
| | | 10 ~ 50mV | | 75 | | |
| | | 0 ~ 100mV | | 76 | | |
| Voltage | V | −1 ~ 1V | | 81 | Initial value: 0.0 ~ 100.0<br>Input scaling setting range: −1999 ~ 9999<br>Span: 10 ~ 5000 counts<br>Position of decimal point: None 1, 2 or 3 decimal places<br>Lower limit value < higher limit value | |
| | | 0 ~ 1V | | 82 | | |
| | | 0 ~ 2V | | 83 | | |
| | | 0 ~ 5V | | 84 | | |
| | | 1 ~ 5V | | 85 | | |
| | | 0 ~ 10V | | 86 | | |
| Current | mA | 0 ~ 20mA | | 91 | | |
| | | 4 ~ 20mA | | 92 | | |

Thermocouple: B, R, S, K, E, J, T, N: JIS/IEC
R.T.D.: Pt100: JIS/IEC, JPt100: Former JIS

*1 Thermocouple B: Accuracy guarantee not applicable to 400°C (752°F) and below.
*2 Thermocouple K, T, U: Accuracy of those whose readings are below −100°C is ±0.7% FS
*3 Thermocouple PLII: Platinel
*4 Thermocouple WRe5-26: ASTM E988-96 (Reapproved 2002)
*5 Thermocouple U, L: DIN 43710
*6 Thermocouple K: Accuracy is as follows;

| Temperature range | External CJ | Internal CJ |
|---|---|---|
| 10.0 ~ 30.0 K | ±(2.0%FS + (CJ error x 20)K + 1K) | |
| 30.0 ~ 70.0 K | ±(1.0%FS + (CJ error x 7)K + 1K) | |
| 70.0 ~ 170.0 K | ±(0.7%FS + (CJ error x 3)K + 1K) | |
| 170.0 ~ 270.0 K | ±(0.5%FS + (CJ error x 1.5)K + 1K) | |
| 270.0 ~ 350.0 K | ±(0.3%FS + (CJ error x 1)K + 1K) | |

*7 Thermocouple AuFe-Cr: Accuracy is as follows;

| Temperature range | External CJ | Internal CJ |
|---|---|---|
| 0.0 ~ 30.0 K | ±(0.7%FS + (CJ error x 3)K + 1K) | |
| 30.0 ~ 70.0 K | ±(0.5%FS + (CJ error x 1.5)K + 1K) | |
| 70.0 ~ 170.0 K | ±(0.3%FS + (CJ error x 1.2)K + 1K) | |
| 170.0 ~ 280.0 K | ±(0.3%FS + (CJ error x 1)K + 1K) | |
| 280.0 ~ 350.0 K | ±(0.5%FS + (CJ error x 1)K + 1K) | |

NOTE: Unless otherwise specified, the measuring range listed below will be set as the factory default.

| Input | Specification/Rating | Measuring Range |
|---|---|---|
| Universal input | K thermocouple | 0.0 ~ 800.0°C |
| Voltage (V) | 0 ~ 10V DC | 0.0 ~ 100.0 |
| Current (mA) | 4 ~ 20mA DC | 0.0 ~ 100.0 |

# 8. Explanation of Functions

All the details are mentioned here except the explanation of 5-5. Procedure of Setting in Screen Group 0.

## 8-1. Events

### (1) Deviation alarm

An alarm action point is set by a deviation from target set value (SV).
For example, when the target set value is 20°C, +10°C should be set for higher limit deviation alarm in order to put an alarm in action at 30°C and higher.
To put an alarm in action at 30°C and lower when the target set value is 100°C, −70°C should be set for higher limit deviation alarm.
Higher limit deviation alarm must be higher than the target set value and lower limit deviation alarm must be lower than the target set value.
This is conveniently used to make the alarm action point follow deviation from the target set value. The setting range will be −1999~2000 unit.

### (2) Absolute value alarm

An alarm action point is set by an absolute value.
For example, 50°C should be set for higher limit absolute alarm in order to put an alarm in action at 50°C and higher.
To put an alarm in action at 20°C and lower, 20°C should be set for lower limit absolute alarm.
Both higher limit and lower limit can be set at any value within the measuring range.
This alarm is convenient when the alarm action point is fixed.

### (3) Standby action

In case the event standby action is set at 2 or 3 (on the screen 1-23 or 1-26), the alarm withholds its action even if the PV value is in the event action range (ON range) when the power is applied, when the setting value is changed, or when the standby is released.
The alarm will go on once the PV value leaves the event action range, the standby action is released, and the PV value enters the event action range again.

### (4) No-standby action

In case the event standby action is set at 1 or 4 (on the screen 1-23 or 1-26), the alarm is output when the PV value enters the event action range, regardless of whether the power is applied, the SV changed, or the standby released.

### (5) Control mode

In case the event standby action is set at 4 (on the screen 1-23 or 1-26), alarm is not output when scaleover has occurred or when the controller is in standby.

## 8-2. Selection of Event Standby Action Code

This is additional description for the explanation in 1-23 event 1 standby action code setting screen of the screen group 1.
The 1-26 event 2 standby action code setting screen is the same.

① Select a code from 1, 2 or 3 of the standby action code table when event output is used as an alarm.
② Select 4 when event output is used for control. Note, however, that setting 4 will not let event output ON even when the input error has occurred.
③ When 2 is set, the standby function is in action when power is applied or when standby is released.
④ When 3 is set, the standby function is in action when power is applied, when standby is released, or when SV in execution is changed.
⑤ A change to 1 or 4 while standby action is in execution, the standby action will be released immediately. When power is supplied and if a PV value is out of a range in which an event action is ON, standby action becomes invalid even when 2 or 3 has been set for standby action.

## 8-3. Alarm Action Diagrams

The followings are diagrams showing alarm actions that can be selected as event 1 and event 2.

Hd : Higher limit deviation alarm

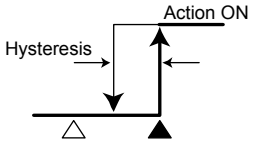


Ld : Lower limit deviation alarm

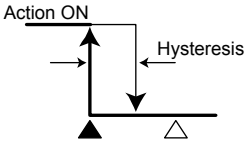


△ : SV value ▲ : Alarm action point

od : Outside higher/lower limit deviations alarm

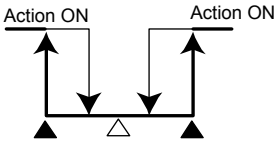


Cd : Within higher/lower limit deviations alarm




HA : Higher limit absolute value alarm

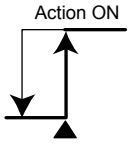


LA : Lower limit absolute value alarm

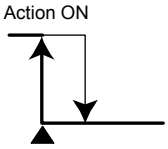


So : Scaleover

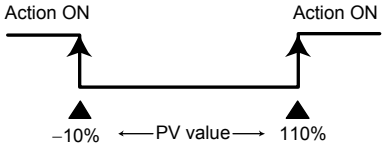


## 8-4. P.I.D.

### (1) P (Proportional band)

A percentage at which control output varies with respect to a measuring range is set. Control output increases or decreases in proportion to a difference between PV and SV values.
The narrower the proportional band, the more conspicuously output changes to strengthen proportional action. If it is too narrow, however, the result of control will be close to ON-OFF action.

### (2) I (Integral time)

This is the function to correct an offset (constant deviation). The longer the integral time, the weaker the corrective action and the shorter the time the stronger the action but control result may be undulated due to integral hunting.

### (3) D (Derivative time)

This is the function to estimate a change in control output, suppress overshoot caused by integration and improve control stability.
The longer the derivative time, the stronger the derivative action but control result may be vibratile.

### (4) MR (Manual Reset)

In PID action, an offset is corrected automatically by I, i.e., integration. When OFF is set for I, correction is not carried out and so output should be increased or decreased manually. This method is called manual reset.

## 8-5. Lower Limit and Higher Limit Setting Limiters

① Output limiter means to limit a minimum or maximum value of control output and this function is effective in specifying the lowest temperature or suppressing overshooting of control.
② Output limiter gives preference to a lower limit value. When a larger lower limit value than a higher limit value is set, the higher limit value is automatically changed to the lower limit value + 1%. In other words, it is not possible to set a higher limit value which is less than a lower limit + 1%.

## 8-6. Proportional Cycle Time

It should be within a range from 1~120 seconds in the case of contact output or SSR drive voltage output.
Proportional cycle time is ON time + OFF time.
The following diagram shows the correlation between proportional cycle time and control output.

① In case the output is 20 %.

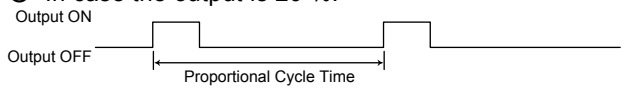


Output is ON during 20 % time of the proportional cycle time, and OFF during 80 % time of proportional cycle time.

② In case the output is 60 %.

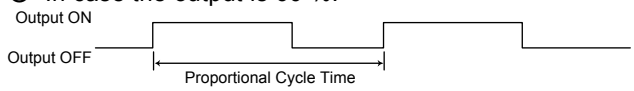


Output is ON during 60 % time of the proportional cycle time, and OFF during 40 % time of proportional cycle time.

## 8-7. Control Output Characteristics

### (1) One-output

For heating action, set RA (reverse action). For cooling action, set DA (direct action).

### (2) Two-output

① In case heating action is OUT1 and cooling action OUT2, set it at RA (reverse action).
② In case heating action is OUT1 and heating action OUT2, set it at DA (direct action).

Control output characteristics with two outputs are shown in the following diagrams. ① shows heating and cooling control and ② two-stage heating control.

① Output characteristic diagram of 2-output heating and cooling action

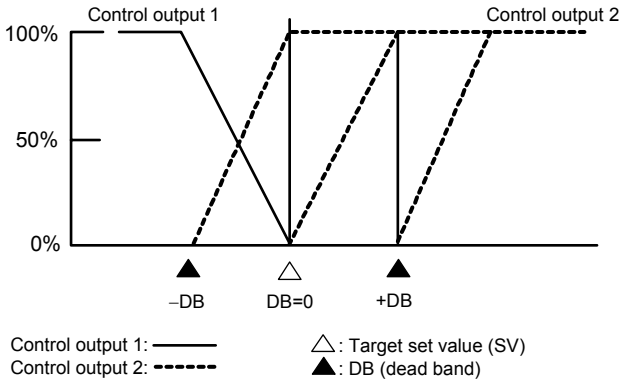


② Output characteristic diagram of 2-output heating and heating action

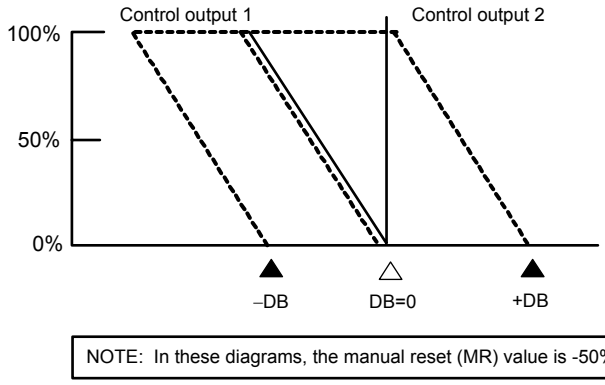


NOTE: In these diagrams, the manual reset (MR) value is -50%.

## 8-8. External input (DI)

The DI signal is detected by the level.
The ON-OFF detection is determined by a 150 msec continuum state across the DI terminal.
The DI type can be specified on the 1-35 DI mode setting screen.

### (1) Set value bias (SB)

This can be set by specifying SB (Set value Bias) to DI mode.
SB value can be set on the 0-7 set value bias setting screen.

When DI input signal is OFF : Execution SV = SV
When DI input signal is ON : Execution SV = SV + SB

Note that in case the execution SV lies outside the range of SV limiters, the actual executed SV is restricted by the SV limiter lower/higher limit values (which can be set on the 1-47 SV limiter lower limit value setting screen or 1-48 SV limiter higher limit value setting screen).
When auto tuning is executed, the SB signal level is maintained at the level just before the auto tuning was started, and SB signal detection is not performed.

### (2) Standby (STBY)

This can be set by specifying STBY (standby) at DI mode.
If STBY is selected, the 0-3 STBY action setting screen is for monitoring only, and the setting cannot be performed.

When DI input signal is OFF: The controller is under control. PID control is executed.
When DI input signal is ON: The controller is on standby.

For STBY, refer to section 5-5 (4).

### (3) Control action characteristics (ACT)

This can be set by specifying ACT (action characteristics) at DI mode.
If ACT is selected, the 1-45 control output characteristic setting screen is for monitoring only, and the setting cannot be performed.

When DI input signal is OFF: RA characteristics are assumed.
When DI input signal is ON: DA characteristics are assumed.

For RA/DA, refer to section 8-7.

## 8-9. Soft Start

It is the function to raise control output gradually in a set time upon applying power, releasing STBY, and at the time of return from scaleover to normal. The function effectively prevents excess current from being present in a heater or the like.

### (1) Conditions of soft start function is put in action

① Under the automatic output mode, when power is applied, when STBY is released, or when a normal state is returned to from scaleover.
② When P (proportional band) is not OFF on the 1-2 output 1 proportional band setting screen.
③ When soft start time has been set, i.e., not OFF on the 1-46 soft start time setting screen.

### (2) Conditions of soft start is released

① Soft start time has elapsed normally.
② An output value under soft start control exceeds a PID operated output value.
③ Soft start time is turned OFF by key operation.
④ The automatic output mode is changed to the manual output mode by key operation.
⑤ AT (auto tuning) is executed by key operation.
⑥ The setting of P (proportional band) is changed to OFF by key operation.
⑦ The measuring range of input is changed by key operation.
⑧ A control output characteristic is changed by key operation.
⑨ When the mode is switched to STBY.

# 9. Maintenance and Troubleshooting

## 9-1. Cause of Trouble and Troubleshooting

| Problem | Cause | Remedy |
|---|---|---|
| 1. Error code is displayed. | 1. Refer to "9-2. Error Codes, Causes and Remedies." | 1. Refer to "9-2. Error Codes, Causes and Remedies." |
| 2. Displayed PV value seems to be incorrect. | 1. Set measuring range code is different from that of input sensor/input signal.<br>2. Erroneous wiring to input terminals of sensor. | 1. Check if set measuring range code is correct for input signal.<br>2. Correct wiring to input terminals of sensor. |
| 3. Display on the front panel goes out and the instrument does not operate. | 1. Problem with power supply and wiring connection.<br>2. Deterioration of the product. | 1. Inspect portions related to power source and wire connection. Check wiring.<br>2. Examine the product and repair or replace. |
| 4. Key unable to be operated. | 1. Keylock is in effect.<br>2. Deterioration of the product.<br>3. In case communication function is added, the communication mode (Com) has been set. | 1. Release keylock.<br>2. Examine and repair or replace the product.<br>3. Change the communication setting to the local mode (Loc). |
| 5. ON-OFF action of control output is too fast. | 1. Too small a value set for hysteresis of ON-OFF action. | 1. Increase the hysteresis value of ON-OFF action. |

## 9-2. Error Codes, Causes and Remedies

### (1) Input measured value problems

| Screen display | Problem | Cause | Remedy |
|---|---|---|---|
| HHHH<br>(HHHH) | Higher limit side scaleover. | 1. A break of thermocouple input wiring<br>2. A break of R.T.D. input A wiring<br>3. Input measured value exceeded higher limit of measuring range by 10%. | 1. Check thermocouple input wiring for a possible break. If If wiring has no problem, replace it.<br>2. Check R.T.D. input A wiring for a possible break. If wiring has no problem, replace R.T.D.<br>3. For voltage or current input, check the transmitting unit of measured values. Check if set code of measuring range is correct for input signal. |
| LLLL<br>(LLLL) | Lower limit side scaleover. | Input measured value fell from lower limit of measuring range by 10%. | Check wiring of reverse polarity for measured value input or wiring for a possible break. |
| b---<br>(b - - -) | A break of R.T.D. input wiring. | 1. A break of B.<br>2. Breaks of ABB. | Check R.T.D. input terminals A, B and B for breaks. If wiring has no problem, replace R.T.D. |
| CJHH<br>(CJHH) | Higher limit side scaleover of cold junction (CJ) of thermocouple input. | Ambient temperature of the product has exceeded 80°C. | 1. Reduce ambient temperature to the level provided in the environment conditions for the product.<br>2. In case ambient temperature has not exceeded 80°C, examine the product. |
| CJLL<br>(CJLL) | Higher limit side scaleover of cold junction (CJ) of thermocouple input. | Ambient temperature of the product has fallen to -20°C or lower. | 1. Raise ambient temperature to the level provided in the environment conditions for the product.<br>2. In case ambient temperature has not fallen to −20°C or lower, examine the product. |

### (2) Heater break/loop alarm problems

| Screen display | Problem | Cause | Remedy |
|---|---|---|---|
| HbHH<br>(HBHH) | Input value from heater current detector has exceeded 55.0A. | Excess current. | 1. Reduce the current.<br>2. Examine the product. |
| HbLL<br>(HBLL) | The product is in trouble. | The product is in trouble. | Examine, repair or replace the product. |

# 10. Record of Parameter Setting

For convenience sake, recording set values and selected items is recommended.
The initial values are of Code 05 (K)

| Screen No. | Parameter (Item)/screen display | | Initial value | Setting/Selection | Record |
|---|---|---|---|---|---|
| 0-0 | Basic screen | 0 (0) | 0 | | |
| 0-1 | Output 1 monitor | | | | |
| 0-2 | Output 2 monitor | | | | |
| 0-3 | STBY action | STBY. (StbY) | E4E | | |
| 0-4 | AT action | At. (At) | oFF | | |
| 0-5 | Event 1 set value setting | E1Hd. (E1Hd) | 2000 units | | |
| 0-6 | Event 2 set value setting | E2Hd. (E2Hd) | −1999 units | | |
| 0-7 | Set value bias setting | Sb. (Sb) | 0 unit | | |
| 1-0 | Initial screen | PArA. (PArA) | SEt | | |
| 1-1 | Keylock setting | KLc. (KLc) | oFF | | |
| 1-2 | Output 1 proportional band setting | P. (P) | 30 | | |
| 1-3 | Output 1 hysteresis | dF. (dF) | 20 units | | |
| 1-4 | Output 1 integral time | I. (I) | 120 | | |
| 1-5 | Output 1 derivative time | d. (d) | 30 | | |
| 1-6 | Output 1 manual reset | mr. (mr) | 0.0 | | |
| 1-7 | Output 1 target value function | SF. (SF) | 0.40 | | |
| 1-8 | Output 1 lower limit output limiter | o-L. (o_L) | 0.0 | | |
| 1-9 | Output 1 higher limit output limiter | o-H. (o_H) | 100.0 | | |
| 1-10 | Output 1 proportional cycle time | o-C. (o_C) | Y: 30, P: 3 | | |
| 1-11 | Output 2 proportional band setting | P2. (P2) | 30 | | |
| 1-12 | Output 2 hysteresis | dF2. (dF2) | 20 units | | |
| 1-13 | Output 2 integral time | 12. (I2) | 120 | | |
| 1-14 | Output 2 derivative time | d2. (d2) | 30 | | |
| 1-15 | Output dead band | db2. (db2) | 0 unit | | |
| 1-16 | Output 2 target value function | SF2. (SF2) | 0.40 | | |
| 1-17 | Output 2 lower limit output limiter | o-L2. (o_L2) | 0.0 | | |
| 1-18 | Output 2 higher limit output limiter | o-H2. (o_H2) | 100.0 | | |
| 1-19 | Output 2 proportional cycle time | o-C2. (o_C2) | Y: 30, P: 3 | | |
| 1-20 | Event at STBY | StEV. (StEU) | oFF | | |
| 1-21 | Event 1 type | E1-m. (E1_n) | Hd | | |
| 1-22 | Event 1 hysteresis | E1-d. (E1_d) | 5 units | | |
| 1-23 | Event 1 standby action | E1-i. (E1_C) | 1 | | |
| 1-24 | Event 2 type | E2-m. (E2_n) | Ld | | |
| 1-25 | Event 2 hysteresis | E2-d. (E2_d) | 5 units | | |
| 1-26 | Event 2 standby action | E2-i. (E2_C) | 1 | | |
| 1-27 | Heater current monitor | Hb-A. (Hb_A) | | | |
| 1-28 | Heater break/loop alarm | Hb-m. (Hb_n) | Lc | | |
| 1-29 | Heater break/loop alarm standby | Hb-i. (Hb_C) | oFF | | |
| 1-30 | Heater break alarm value | Hb-S. (Hb_S) | oFF | | |
| 1-31 | Heater loop alarm value | HL-S. (HL_S) | oFF | | |
| 1-32 | Analog output type | Ao-m. (Ao_n) | PV | | |
| 1-33 | Analog output scaling lower limit | Ao-L. (Ao_L) | 0.0 | | |
| 1-34 | Analog output scaling higher limit | Ao-H. (Ao_H) | 800.0 | | |
| 1-35 | DI mode | Di. (dC) | Sb | | |
| 1-36 | Communication mode setting | comm. (comn) | Loc | | |
| 1-37 | Communication protocol | Prot. (Prot) | Shcn | | |
| 1-38 | Communication address | Addr. (Addr) | 1 | | |
| 1-39 | Communication data format | dAtA. (dAtA) | 7E1 | | |
| 1-40 | Start character | SchA. (ScHA) | St4 | | |
| 1-41 | BCC operation type | bcc. (bcc) | 1 | | |
| 1-42 | Communication speed | bPS. (bPS) | 1200 | | |
| 1-43 | Communication delay time | dely. (dELY) | 20 | | |
| 1-44 | Communication memory mode | mem. (nEn) | EEP | | |
| 1-45 | Control output characteristic | Act. (Act) | rA | | |
| 1-46 | Soft start time | Soft. (SoFt) | oFF | | |
| 1-47 | SV limiter lower limit value | SV-L. (SH_L) | 0.0 | | |
| 1-48 | SV limiter higher limit value | SV-H. (SH_H) | 800.0 | | |
| 1-49 | PV bias value | PV-b. (PV_b) | 0 unit | | |
| 1-50 | PV filter time | PV-F. (PV_F) | 0 | | |
| 1-51 | Measuring range codes Universal:<br>V:<br>A: | rAnG. (rAnG)<br>rAnG. (rAnG)<br>rAnG. (rAnG) | 05<br>86<br>92 | | |
| 1-52 | Temperature unit | Unit. (Unit) | C | | |
| 1-53 | Input scaling lower limit | Sc-L. (Sc_L) | 0.0 | | |
| 1-54 | Input scaling higher limit | Sc-H. (Sc_H) | 800.0 | | |
| 1-55 | Input scaling decimal point position | Scdp. (ScdP) | 0.0 | | |
| 1-56 | CJ external/internal switching | Cj. (CJ) | Int | | |
| 1-57 | PV display at standby setting | Disp. (dCSP) | PV | | |

# 11. Specifications

## ■ Display

- Digital display: Measured value (PV)/7 segments red LED 4 digits
  Target set value (SV)/7 segments green LED 4 digits
- Display accuracy: ±(0.3%FS + 1 digit)
  Excluding reference contact temperature compensation accuracy of thermocouple input.
  Refer to "Table of Measuring Range Codes" for individual details.
- Display accuracy maintaining range:
  23˚C ± 5˚C (18~28˚C)
- Display resolution: Differs by measuring range (0.001, 0.01, 0.1 and 1)
- Measured value display range: –10%~110% of measuring range
- Display updating cycle: 0.25 seconds
- Action display/color: 7 type, LED lamp display
  Control output (OUT1, OUT2)/Green
  Event (EV1, EV2)/Orange
  Auto tuning (AT)/Green
  Manual control output (MAN)/Green
  Set value bias, communication (SB/COM)/Green

## ■ Setting

- Setting method: By operating 4 keys (◎, ▲, ▼ and ENT) on the front panel
- Target value setting range: Same as measuring range (within setting limiter)
- Setting limiter: Individual setting for higher and lower limits, any value is selectable within measuring range (Lower limit value < Higher limit value)

## ■ Input

- Type of input: Selectable from Universal (TC, Pt, mV), voltage (V) and current (mA)
- Thermocouple: B, R, S, K, E, J, T, N, PL II, WRe5-26 (UL (DIN 43710)), AuFe-Cr (Kelvin scale)
  Input impedance: 500kΩ minimum
  External resistance tolerance: below 100Ω
  Burnout function: Standard feature (up scale)
  Reference contact compensation accuracy:
  ± 1˚C (within the accuracy maintaining range (23 ± 5˚C))
  ± 2˚C (between 5 and 45˚C of ambient temperature)
- R.T.D.: Pt100/JPt100, 3-wire type
  Normal current: 0.25 mA
  Lead wire tolerance: 5Ω maximum/wire (3 lead wires should have the same resistance.)
- Voltage mV: –10~10, 0~10, 0~20, 0~50, 10~50, 0~100mv DC
  V: –1~1, 0~1, 0~2, 0~5, 1~5, 0~10V
  Input impedance: 500kΩ minimum
- Current mA: 0~20, 4~20mA DC
  Receiving impedance: 250Ω
- Input scaling function: Scaling possible for voltage (mV, V) or current (mA) input
  Scaling range: –1999~9999 counts
  Span: 10~5000 counts
  Position of decimal point: None, 1, 2 and 3 decimal places
- Sampling cycle: 0.25 seconds
- PV bias: –1999~2000 units
- PV filter: 0~100 seconds
- Cold junction compensation: Selectable between internal and external by front key
- Isolation: Control input not insulated from system, set value bias, and CT input but insulated from others

## ■ Control

- Control mode
  With 1-output: Expert PID control with auto tuning function
  RA (reverse characteristic): Heating action
  DA (direct characteristic): Cooling action
  With 2-output: Expert PID control with auto tuning function + PID control
  RA (reverse characteristic): Heating action (OUT1) and cooling action (OUT2)
  DA (direct characteristic): 2-stage heating action
- Output action mode: MAN (manual), AUTO (automation) / STBY (standby)
- Event at STBY: ON/OFF
- Type of control/rating: Contact/1 a 240V AC 2A (resistive load) 1.2A (inductive load)
  (Common to Output 1 and 2): SSR drive voltage/12V±1.5V DC (Maximum load current 30mA)
  Current/4~20mA DC (Maximum load resistance 600Ω)
  Voltage/0~10V DC (Maximum load current 2mA)
- Control output resolution: Control output 1: approx. 0.0125% (1/8000)
  Control output 2: approx. 0.5% (1/200)
- Control output 1
  Proportional band (P): OFF, 0.1~999.9% (ON-OFF action by OFF)
  Integral time (I): OFF, 1~6000 seconds (P or PD action by OFF)
  Derivative time (D): OFF, 1~3600 seconds (P or PI action by OFF)
  Target value function: OFF, 0.01~1.00
  ON-OFF hysteresis: 1~999 units (Effective when P=OFF)
  Manual reset: –50.0~50.0% (Effective when I=OFF)
  Higher/lower limit output limiter: Lower limit 0.0~99.9%, higher limit 0.1~100.0% (Lower limit value < Higher limit value)
  Proportional cycle: 1~120 seconds (for contact and SSR drive voltage output)
- Control output 2 (option)
  Proportional band (P): OFF, 0.1~999.9% (ON-OFF action by OFF)
  Integral time (I): OFF, 1~6000 seconds (P or PD action by OFF)
  Derivative time (D): OFF, 1~3600 seconds (P or PI action by OFF)
  Target value function: OFF, 0.01~1.00
  ON-OFF hysteresis: 1~999 units (Effective when P=OFF)
  Dead band: –1999~5000 units (Overlap with a negative value)
  Higher/lower limit output limiter: Lower limit 0.0~99.9%, higher limit 0.1~100.0% (Lower limit value < Higher limit value)
  Proportional cycle: 1~120 seconds (for contact and SSR drive voltage output)
- Manual control
  Output setting range: 0.0~100.0%
  Setting resolution: 0.1%
  Manual ↔ auto switching: Balanceless bumpless transfer (within proportional range, however.)
- Soft start: OFF, 1~100 seconds
- AT point: SV value in execution
- Control output characteristic: RA (reverse characteristic)/DA (direct characteristic) switching by front key
- Isolation: Contact output isolated from all.
  Analog output not insulated from SSR drive voltage, current and voltage but insulated from others. (In case another output is also of SSR drive voltage, current or voltage, however, two outputs are not insulated from each other.)

## ■ Event output (option)

- Number of event points: 2 points of EV1 and EV2
- Types: Selectable from the following 9 types for EV1 and EV2:
  oFF: No selection
  Hd: Higher limit deviation
  Ld: Lower limit deviation
  od: Outside higher/lower limit deviations
  Cd: Within higher/lower limit deviations
  HA: Higher limit absolute value
  LA: Lower limit absolute value
  So: Scaleover
  Hb: Heater break/loop alarm
- Event setting range: Absolute values (both higher limit and lower limit): Within measuring range
  Deviations (both higher limit and lower limit): –1999~2000 units
  Higher/lower limit deviations (within/outside): 0~2000 units
- Event action: ON-OFF action
- Hysteresis: 1~999 units

- Standby action: Selectable from the following 4 types;
  EV1 and EV2:
  1 Without standby action.
  2 Standby when power is applied or when standby is released.
  3 Standby when power is applied, when standby is released or when SV value in execution is changed.
  4 Control mode without standby action (No alarm is output at the time of abnormal input).
- Output type/rating: Contact (1a × 2 points common)/240V AC 1A (resistive load)
- Output updating cycle: 0.25 seconds

### Heater break/heater loop alarm (option)

Heater break/loop detection only for OUT1 (Selectable when output type is contact or SSR drive voltage)

- Current capacity: 30A or 50A CT to be designated when ordering.
- Alarm action: Heater current is detected by external CT provided as an accessory.
  When heater break is detected while control output is ON=Alarm output ON
  When heater loop alarm is detected while control output is OFF=Alarm output ON
- Current setting range: OFF, 0.1~50.0A (Alarm action is stopped by setting OFF)
- Setting resolution: 0.1A
- Current display range: 0.0~55.0A
- Display accuracy: ±2.0A (Sine wave at 50Hz)
- Minimum time to identify action: 0.25 seconds common to ON and OFF (every 0.5 seconds)
- Alarm retention mode: Selectable from lock (to retain) and real (not to retain).
- Standby action: Selectable from without (OFF) and with (ON).
- Sampling cycle: 0.5 seconds
- Isolation: CT input not insulated from system and other inputs but insulated from the rest.

### DI (option)

- Number of input points 1 point
- Setting range: –1999~5000 units
- Action input: No-voltage contact or open collector (level action) about 5V DC, 1mA maximum
- Minimum level retention time: 0.15 seconds
- DI types: 1) None
  2) SB; set value bias
  3) STBY; standby
  4) ACT; control action characteristics
- Isolation: Action input not insulated from system and other inputs but insulated from others

### Communication function (option)

- Type of communication: RS-232C, RS-485
- Communication system: RS-232C : 3-line type half duplex system
  RS-485 : 2-line type half duplex system
  (RS-485 is of half-duplex multi-drop (bus) system)
- Communication distance: RS-232C : The longest: 15 m
  RS-485 : The longest: 500 m (depending on conditions)
- Number of connectable instruments:
  RS-232C: 1, RS-485: up to 31
- Synchronization system: Start-stop synchronization system
- Communication speed: 1200, 2400, 4800, 9600, 19200 bps
- Communication address: 1~255
- Communication delay time: 1~100 (× 0.512 msec)
- Communication memory mode: EEP/RAM/r_E
- Communication protocol (1): Shimaden protocol
  Data format: 7E1, 7E2, 7N1, 7N2, 8E1, 8E2, 8N1, 8N2
  Control code: STX_ETX_CR, STX_ETX_CRLF, @_:_CR
  Communication BCC: Add, Add two's cmp, XOR, None
  Communication code: ASCII code
- Communication protocol (2): MODBUS ASCII mode
  Data format: 7E1, 7E2, 7N1, 7N2
  Control code: CRLF
  Error check: LRC check
  Function code: 03H, 06H (Hex)
  1) 03H, read data
  2) 06H, write data
- Communication protocol (3): MODBUS RTU mode
  Data format: 8E1, 8E2, 8N1, 8N2
  Control code: None
  Error check: CRC-16
  Function code: 03H, 06H (Hex)
  1) 03H, read data
  2) 06H, write data
- Isolation: Communication signals insulated from system, each input and each output.

### Analog output (option)

- Number of output points: 1 point
- Type of analog output: Selectable from measured value, target value (SV in execution), control output 1 and control output 2.
- Output signal/rating: 4~20mA DC/Maximum load resistance 300 Ω
  0~10V DC/Maximum load current 2mA
  0~10mV DC/Output impedance 10 Ω
- Output scaling: Measured value, target value: Within measuring range (reverse scaling possible)
  Control output 1 and 2 0.0~100.0% (reverse scaling possible)
- Output accuracy: ±0.3% FS (with respect to displayed value)
- Output resolution: About 0.01% (1/10000)
- Output updating cycle: 0.25 seconds
- Isolation: Analog output insulated from system and inputs but not insulated from control output except contact output.

### General specifications

- Data storage: Non-volatile memory (EEPROM)
- Environmental conditions for instrument operation:
  Temperature: –10~50˚C
  Humidity: 90% RH or less (no dew condensation)
  Height: 2000m from the sea level or lower
  Category: II
  Degree of pollution: 2
- Storage temperature: –20~65˚C
- Supply voltage: Either 100-240V AC±10% 50/60Hz or 24V AC/DC±10% to be designated.
- Power consumption: SR91: 100-240V AC 11VA maximum for AC; 6W for DC 24V; 7VA for AC 24V
  SR92, SR93 and SR94: 15VA maximum for 100-240V AC; 8W for DC 24V; 9VA for AC 24V
- Input/noise removal ratio: 50 dB or higher in normal mode (50/60 Hz)
  130 dB or higher in common mode (50/60 Hz)
- Conformity with standards: Safety: IEC61010 and EN61010-1
  EMC: EN61326
- Insulation resistance: Between input/output terminals and power terminal 500V DC 20MΩ or above;
  Between input/output terminals and protective conductor terminal 500V DC 20MΩ or above
- Dielectric strength: Between input/output terminals and power terminal 2300V AC/minute; Between power terminal and protective conductor terminal 1500V AC/minute
- Protective structure: Only front panel has dust-proof and drip-proof structure equivalent to IP66.
- Material of case: PPO resin molding (equivalent to UL94V-1)
- External dimensions:
  SR91: H48 × W48 × D111 (Panel depth: 100) mm
  SR92: H72 × W72 × D111 (Panel depth: 100) mm
  SR93: H96 × W96 × D111 (Panel depth: 100) mm
  SR94: H96 × W48 × D111 (Panel depth: 100) mm
- Mounting: Push-in panel (one-touch mount)
- Panel thickness: 1.0~4.0 mm
- Panel cutout: SR91: H45 × W45 mm
  SR92: H68 × W68 mm
  SR93: H92 × W92 mm
  SR94: H92 × W45 mm
- Weight: SR91: Approximately 170 g
  SR92: Approximately 280 g
  SR93: Approximately 330 g
  SR94: Approximately 240 g

**产品中有毒有害物质或元素的名称及含量**

| 部件名称 | 有毒有害物质或元素 | | | | | |
|---|---|---|---|---|---|---|
| | 铅 (Pb) | 汞 (Hg) | 镉 (Cd) | 六价铬 (Cr (VI)) | 多溴联苯 (PBB) | 多溴二苯醚 (PBDE) |
| 印制电路板 | × | ○ | ○ | ○ | ○ | ○ |
| 电子元器件 | × | ○ | ○ | ○ | ○ | ○ |
| 接线端子 | ○ | ○ | ○ | ○ | ○ | ○ |
| 外壳 | ○ | ○ | ○ | ○ | ○ | ○ |

○：表示该有毒有害物质在该部件所有均质材料中的含量均在 SJ/T 11363-2006 标准规定的限量要求以下。
×：表示该有毒有害物质至少在该部件的某一均质材料中的含量超出 SJ/T 11363-2006 标准规定的限量要求。

The contents of this manual are subject to change without notice.

**Temperature and Humidity Control Specialists**

**SHIMADEN CO., LTD.**

http://www.shimaden.co.jp/

Head Office: 2-30-10 Kitamachi, Nerima-ku, Tokyo 179-0081 Japan
Phone: +81-3-3931-7891 Fax: +81-3-3931-3089 E-mail:exp-dept@shimaden.co.jp

T1108***㊀

PRINTED IN JAPAN

# SECTION 6
# TEMPERATURE CONTROL ACTUATOR

US FURNACES, LLC MAX 4000

| Instruction Manual 902 |
| --- |
| 12/7/2009 |

# Eclipse Trilogy Actuator

## Series T500

*Version 1*

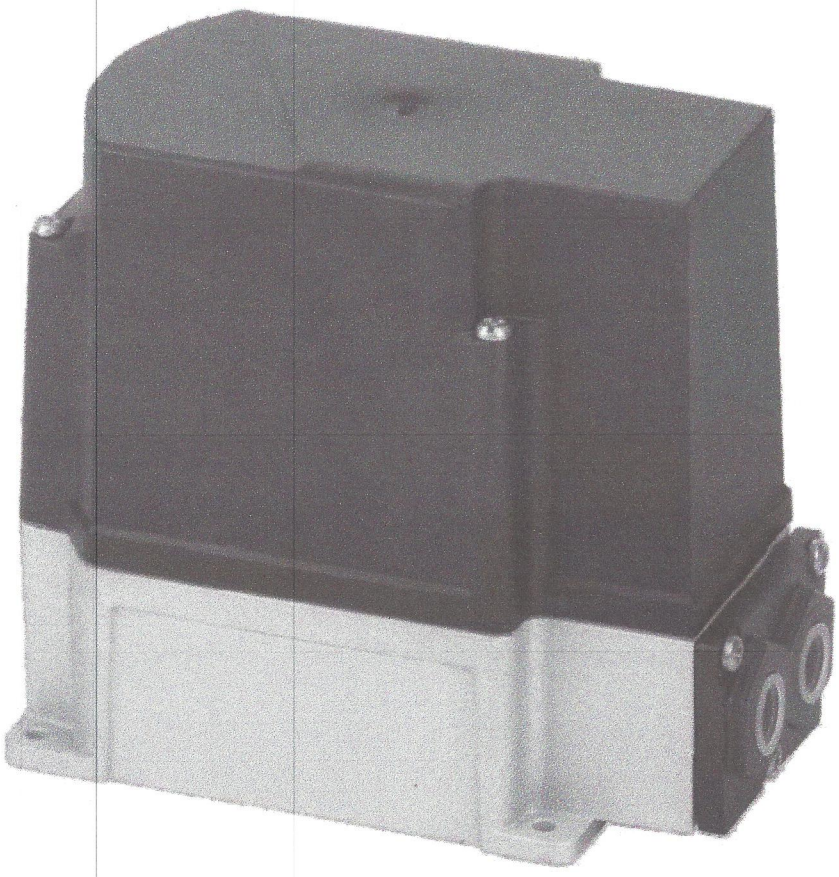

SIMPLE. SECURE. EFFICIENT.
TRILOGY
SERIES

ECLIPSE®
Innovative Thermal Solutions

## Copyright

Copyright 2009 by Eclipse, Inc. All rights reserved worldwide. This publication is protected by federal regulation and shall not be copied, distributed, transmitted, transcribed or translated into any human or computer language, in any form or by any means, to any third parties, without the express written consent of Eclipse, Inc.

## Disclaimer Notice

In accordance with the manufacture's policy of continual product improvement, the product presented in this brochure is subject to change without notice or obligation.

The material in this manual is believed adequate for the intended use of the product. If the product is used for purposes other than those specified herein, confirmation of validity and suitability must be obtained. Eclipse warrants that the product itself does not infringe upon any United States patents. No further warranty is expressed or implied.

## Liability and Warranty

We have made every effort to make this manual as accurate and complete as possible. Should you find errors or omissions, please bring them to our attention so that we may correct them. In this way we hope to improve our product documentation for the benefit of our customers. Please send your corrections and comments to our Marketing Communications Manager.

It must be understood that Eclipse's liability for its product, whether due to breach of warranty, negligence, strict liability, or otherwise is limited to the furnishing of replacement parts and Eclipse will not be liable for any other injury, loss, damage or expenses, whether direct or consequential, including but not limited to loss of use, income, or damage to material arising in connection with the sale, installation, use of, inability to use, or the repair or replacement of Eclipse's products.

Any operation expressly prohibited in this manual, any adjustment, or assembly procedures not recommended or authorized in these instructions shall void the warranty.

## Document Conventions

There are several special symbols in this document. You must know their meaning and importance.

The explanation of these symbols follows below. Please read it thoroughly.

## How To Get Help

If you need help, contact your local Eclipse representative. You can also contact Eclipse at:

1665 Elmwood Rd.
Rockford, Illinois 61103 U.S.A.

Phone: 815-877-3031
Fax: 815-877-3336

http://www.eclipsenet.com

| | |
|---|---|
|  | This is the safety alert symbol. It is used to alert you to potential personal injury hazards. Obey all safety messages that follow this symbol to avoid possible injury or death. |
|  | Indicates a hazardous situation which, if not avoided, will result in death or serious injury. |
|  | Indicates a hazardous situation which, if not avoided, could result in death or serious injury. |
|  | Indicates a hazardous situation which, if not avoided, could result in minor or moderate injury. |
| ***NOTICE*** | Is used to address practices not related to personal injury. |
| **NOTE** | Indicates an important part of text. Read thoroughly. |

# Table of Contents


**1 Introduction** ..... **4**
- Product Description ..... 4
- Product Features ..... 4
- Audience ..... 4
- Purpose ..... 4

**2 Safety** ..... **5**
- Safety Warnings ..... 5
- Capabilities ..... 5
- Operator Training ..... 5
- Replacement Parts ..... 5
- Disposal ..... 5
- System Use ..... 5

**3 Installation** ..... **7**
- Handling ..... 7
- Storage ..... 7
- Approval of Components Electrical Wiring ..... 7
- Checklist Before Installation ..... 7
- Actuator Mounting ..... 7
- Cam Adjustment ..... 8
- Shaft Disengage ..... 9
- Auxiliary Contacts ..... 9
- Actuator Wiring ..... 9
- Electrical Version, Control Signal Wiring ..... 9
- Electrical Version, Range Adjustment ..... 10
- Connection Terminals ..... 11
- Cam Positions (Factory Settings) ..... 13
- Typical Application ..... 14
- Checklist After Installation ..... 14

**4 Specifications** ..... **16**
- Standards and Certificates ..... 16
- Dimensions ..... 17

**5 Maintenance & Troubleshooting** ..... **18**
- Maintenance ..... 18
- Monthly Checklist ..... 18
- Yearly Checklist ..... 18
- Troubleshooting ..... 18

# Introduction 1

## Product Description

The Eclipse T500 Actuator is suitable for driving flow control valves, butterfly valves, dampers or other applications which require rotary motion.

The Actuators are primarily used with an electronic controller to regulate a process load, such as temperature. Models provide proportional positioning in response to 2-position, 3-position, 135 ohm, 4-20 mA and 2-10 VDC signal. The drive shaft of the actuator connects to a butterfly valve stem, which rotates 90 degrees from minimum to maximum position.

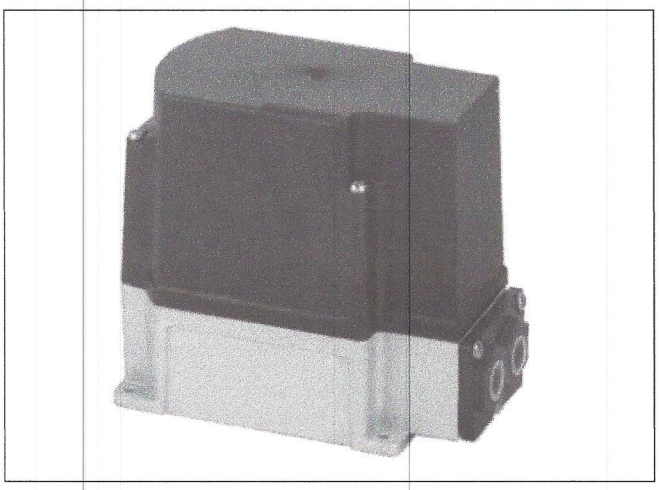

**Figure 1.1. T500 Actuator**

## Product Features

The T500 Actuators are designed to optimize performance of a combustion system. Features include:

- Power and approvals accepted globally
- Clockwise and counterclockwise models
- Fine step resolution and repeatability
- Basic step (bumping) or analog control
- Adjustable stroke and signal range
- Drive shaft can be manually disengaged
- Simple and precise cam switch adjustment
- Models with position feedback potentiometer

## Audience

This manual has been written for people who are already familiar with all aspects of a combustion system and its add-on components, also referred to as "the burner system".

The audience is expected to have experience with the control components of a burner system.

## Purpose

The purpose of this manual is to make sure that the actuator component of a burner system is used in a safe, effective and trouble free manner.

# Safety

# 2

Important notices about safe actuator operation will be found in this section. To avoid personal injury, damage to property or the facility, the following warnings must be observed. Read this entire manual before attempting to start the system. If any part of the information in this manual is not understood, contact Eclipse before continuing.

## Safety Warnings

**⚠ WARNING**

- **Protect against electrical shock before making any wiring changes in the connection area by turning off the main power supply. Ensure that the power cannot be inadvertently switched on again and that it is indeed dead.**
- **Protect against electrical shock by providing adequate protection for the terminal connections. Ensure that no bare conductors are exposed to touch at the terminals. Do not operate with missing terminal plugs.**
- **Protect against a electrical shock hazard by ensuring that the cover can be lifted upwards of the control unit, allowing safe setting of the cams when main voltage is present.**

**⚠ CAUTION**

- **Risk of electric shock - More than one disconnect switch may be required to de-energize the equipment. Disconnect all power to the device before servicing.**

***NOTICE***

- **After each adjustment, maintenance or troubleshooting check to ensure that wiring is in an orderly state.**
- **Fall or shock can adversely affect the safety functions. Such actuators must not be put into operation even if they do not exhibit any damage.**

## Capabilities

Adjustment, maintenance and troubleshooting of the mechanical parts of this system must be done by qualified personnel with good electrical and mechanical aptitude and experience with combustion equipment.

## Operator Training

The best safety precaution is an alert and competent operator. Thoroughly instruct operators so they demonstrate an understanding of the equipment and its operation.

## Replacement Parts

Order replacement actuators from Eclipse only.

## Disposal

The actuator contains electrical and electronic components and must not be disposed of together with domestic waste.

Local and currently valid legislation must be observed.

## System Use

The Eclipse T500 Actuator must be used with an approved listed combustion control system consisting of a flame safeguard and safety shut-off valves. The following diagrams illustrate the general arrangement of the typical control schemes. These diagrams do not show all of the devices that may be required for a complete control system and are not meant to be used for construction.

**Fixed Air Burner**

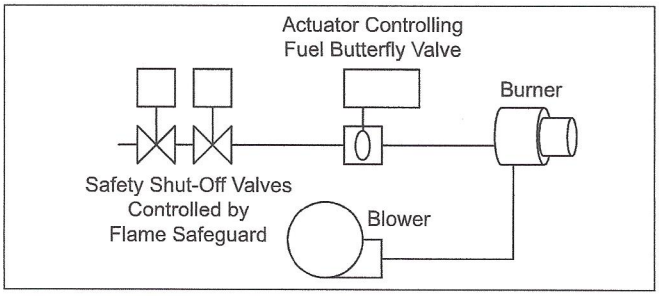


**Figure 2.1. Fixed Air Burner**

## Ratio Burner

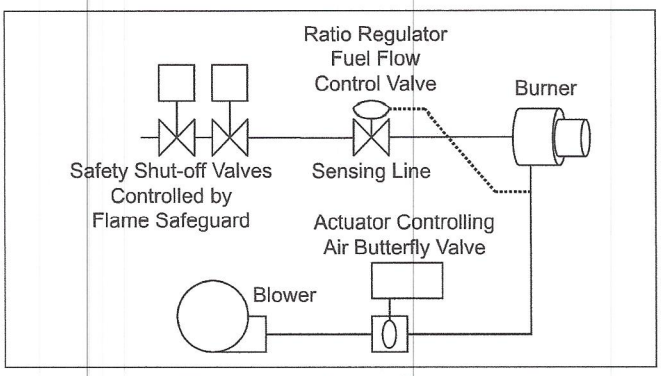


**Figure 2.2. Ratio Burner**

**CAUTION**

- **Use of this product in the European community shall only be deployed in a manner that meets the applicable EC directives and laws.**
- **In areas where DIN regulations apply, the mounting and installation must comply wth DIN/ VDE 0100, 0550 and DIN/VDE 0722.**

# Installation 3

In this section you will find the information and instructions that you need to install the actuator.

**⚠ CAUTION**

- **Installation and maintenance must conform with the National Electrical Code and all other national and local codes and authorities having jurisdiction. The actuator must be installed by a qualified technician.**

## Handling

1. Make sure that the area is clean.
2. Protect the actuator from the weather, damage, dirt and moisture.
3. Protect the actuator from excessive temperatures and humidity.
4. Take care not to hit or drop the actuator.

## Storage

1. Make sure that the actuator is clean and in good condition.
2. After you have made sure that everything is present and in good condition, keep the actuator in the original package as long as possible.
3. Store the actuator in a cool, clean, dry room.

## Approval of Components Electrical Wiring

All of the electrical wiring must comply with one of the following standards:

- NFPA Standards 70
- EN60204-1
- the electrical wiring must be acceptable to the local authority having jurisdiction

### Where to get the standards:

The NFPA Standards are available from:

National Fire Protection Agency
Batterymarch Park
Quincy, MA 02269

Information on the EN standards, and where to get the standards is available from:

CENELEC
Avenue Marnix 17
B-1000 Brussels, Belgium

## Checklist Before Installation

### Access

Make sure that you install the actuator in such a way that you have easy access to it for inspection and maintenance. Ensure that the cover has enough clearance to be easily removed.

### Environment

Make sure that the local environment matches the original operating specifications. Check the following items:

- voltage, frequency and stability of the electrical power
- humidity, altitude and temperature of air
- presence of damaging corrosive gases in the air

## Actuator Mounting

Depending on your application, please keep the following in mind when mounting the actuator:

- The actuator housing has seven possible mounting holes, as shown in Figure 3.1.
  - The outer set of four holes "A" are clear for inserting bolts up to size M5 or #10.
  - The inner set of three holes "B" are drilled to a depth of 9.8mm (0.39") to accept tapping screws size M5 or #10-32.
  - A 6mm wide by 7mm long by 6mm deep hole "C" is provided for brackets designed with a stop pin.
- Mounting this actuator depends on the application; contact Eclipse for available mounting kits.
- When mounting the actuator, be certain that the actuator's drive shaft is properly aligned with the other shaft to which it will be coupled to avoid undue lateral stress.
- The standard drive shaft is round with a Woodruff key for a coupling, as shown on page 17. Some models may have a square shaft.
- Provide support for the weight of conduit or cables into the actuator.
- Ensure clearance for cover removal.

- Ensure the actuator is not exposed to direct sunlight.
- Determine if the butterfly valve (BV) has unrestricted full rotation or if it has physical stops that limit rotation to a specific angle. Also, determine the minimum position, rotation direction to open, and maximum open position for the BV.
- Check the actuator's rotation direction and cam switch adjustments match to the butterfly valve. Refer to "Cam Positions" on page 13 to identify the low and high stroke adjustment.
- Make the electrical connections either temporary or as required by the application and apply power. Verify for proper and smooth motion over the full stroke range. Correct any abnormalities before placing the equipment into operation.

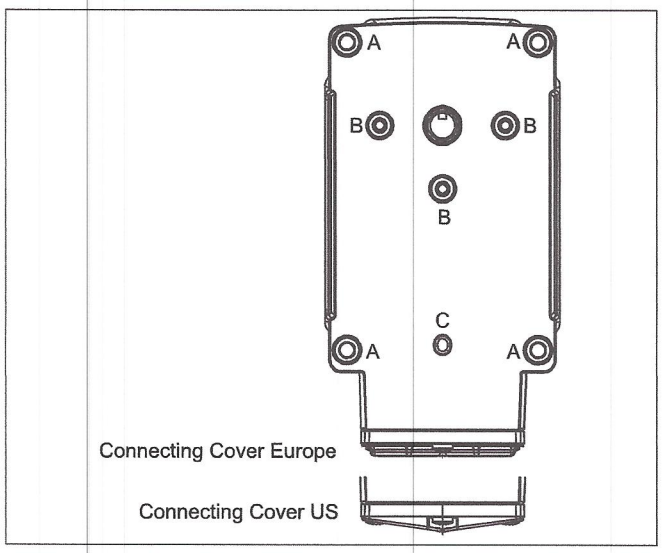


**Figure 3.1. Mounting Hole Location**

**⚠ WARNING**

- **Local regulations may require guards and/or warnings when connecting the actuator to a device that could cause finger pinching. The actuator stall torque is at least 10 Nm.**
- **Do not attempt to mechanically force the actuator shaft to rotate. See "Shaft Disengage" on page 9 for procedure.**

**⚠ CAUTION**

- **Appropriate electrical fittings must be installed to maintain seal and environmental ratings.**
- **Prevent water from condensation flowing into the actuator housing through the wiring conduits. Keep conduits oriented such that gravity will cause water to flow away from the actuator or provide a watertight seal in the conduit near the actuator.**

**⚠ CAUTION**

- **If using cables, provide strain relief in conformance to the relevant standards, such as DIN EN 60730 and DIN EN 60335.**

**NOTE:** The butterfly valve rotation direction is viewed from the shaft end connected to the actuator. The slot at the end of the butterfly valve shaft is parallel to the shutter. See Figure 3.2. When the shaft is rotated to align the slot to the pipe direction, the valve is at maximum flow. Eclipse BVs with the beveled shutter option have a 75 degree stroke. The minimum positions of these valves physically stop at about a 15 degree angle when the butterfly shaft is turned fully counter-clockwise. Therefore, the actuator must have its low position set to about 15 degrees to prevent trying to rotate against the physical stop. Final fine-tuning adjustments to the minimum position can be made after mounting the actuator to the BV.

**NOTE:** The rotating direction of the actuator is viewed into the shaft. Therefore, the clockwise butterfly valve needs a counter clockwise actuator.

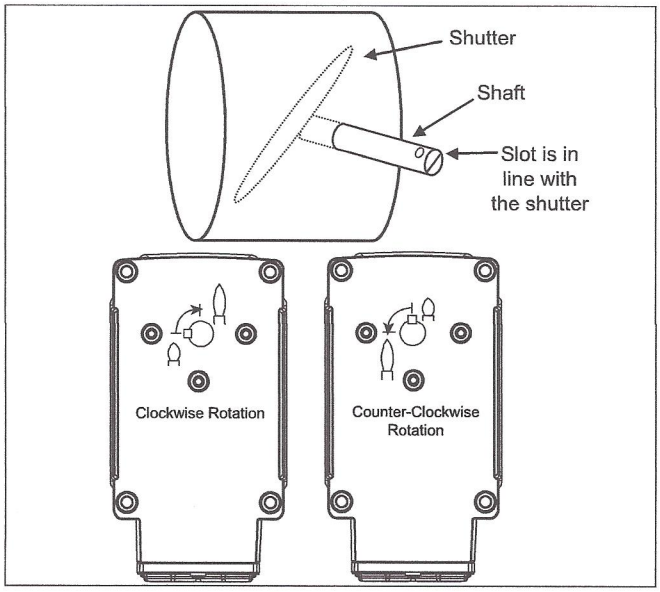


**Figure 3.2.**

## Cam Adjustment

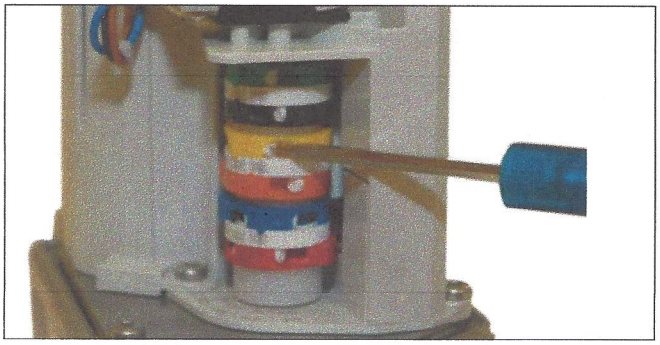

**Figure 3.3.**

Use a small flat blade screw driver in the screw slot corresponding to the cam to be adjusted. Turn the adjusting screw until the cam pointer is at the desired degree on the scale. An internal index at the bottom of the cams shows the current position. For clockwise-to-open models, use the outer scale marked "R". For counter clockwise models, use the inner scale marked "L". See "Cam Positions" on page 13.

## Shaft Disengage

Shaft can be disengaged from the motor and part of the gear train by pressing pin K1. When the motor starts driving, then the shaft automatically re-engages.

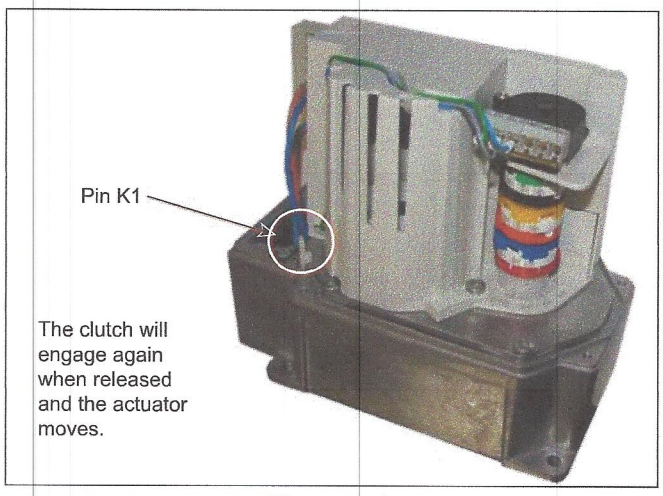


**Figure 3.4.**

## Auxiliary Contacts

The internal contacts marked AUX are isolated and voltage-free. Take care not to exceed the contact ratings listed in the specifications table on page 16. These contacts can be used for position detection and auxiliary control.

## Actuator Wiring

Access is through the two electrical connectors at the end of the actuator. Remove the housing cover to access the terminal strips, as shown in Figure 3.5.

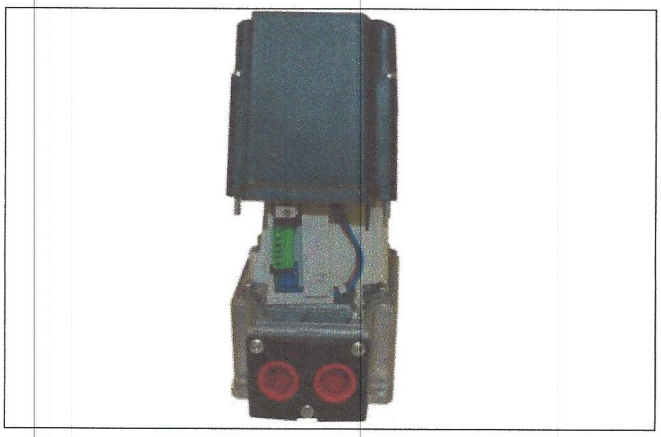

**Figure 3.5. Actuator Wiring**

Connection Terminals shown in Figure 3.8 and Figure 3.9 shows the wiring diagram for the actuator, while Typical Applications on Figure 3.11 shows a temperature control connected to the electronic version.

To install a wire into a terminal, first be sure the terminal is fully open. Strip the wire insulation back 1/4" (6mm), and insert the wire. Hold the wire in place while tightening the terminal screw. Inspect the wire for loose strands and gently pull it to ensure a secure connection. Use only one wire per terminal.

**⚠ DANGER**

- **To reduce the risk of electric shock - Do not connect to a circuit operating at more than 150 volts to ground.**

**⚠ WARNING**

- **Risk of electric shock - Removal of the housing cover allows access to conductors carrying hazardous voltage.**

**⚠ CAUTION**

- **The conduit connecting cover is plastic, therefore bonding to the gound and between conduit fittings must be provided as part of the installation.**

***NOTICE***

- **Connect only to a flexible wiring system.**
- **Use copper conductors only.**
- **For supply connections, use No. 16 AWG or larger wire rated for at least 194°F (90°C).**
- **Power to the actuator must be protected for over current according to the relevent standard, such as a fuse of maximum 6.3 AT.**
- **Wire all class 2 circuits using Types CL3, CL3R, CL3P or equivalent conductors.**
- **Required tightening torques:**
  - Housing cover: 3.5 Nm
  - Cable connecting cover: 2 Nm

## Electronic Version, Control Signal Wiring

Connect a 4-20mA signal positive (+) to X1-3 and negative (–) to X1-2 (GND). Or alternately connect a 0-10 Vdc signal positive (+) to X1-1 and negative (–) to X1-2

(GND). For potentiometer, connect the high end of the pot to X1-6, the low end to X1-4 and the wiper to X1-5.

If more than one signal is connected, the respective position command from each are added together.

**NOTE:** Keep low voltage signal wiring separated from higher voltage wiring to reduce the chance of electrical interference. The use of shielded cable with one end of the shield connect to the ground can provide effective resistance to electrical interference.

## Electronic Version, Range Adjustment

1. Adjust cam number "I" to the desired high fire position (e.g. 85°).
2. Adjust cam "V" to the required low fire position (e.g. 20°).
3. Feed signal corresponding to the high fire position (e.g. 20mA) to the analog input.
4. Adjust potentiometer "max".
   a. clockwise, if the actuator has not reached the maximum position yet.
   b. counterclockwise, until the actuator just starts moving.
5. Feed signal corresponding to the low fire position (e.g. 4 mA) to the analog input.
6. Adjust potentiometer "min".
   a. counterclockwise, if the actuator has not reached the min position yet.
   b. clockwise, until the actuator just starts moving.

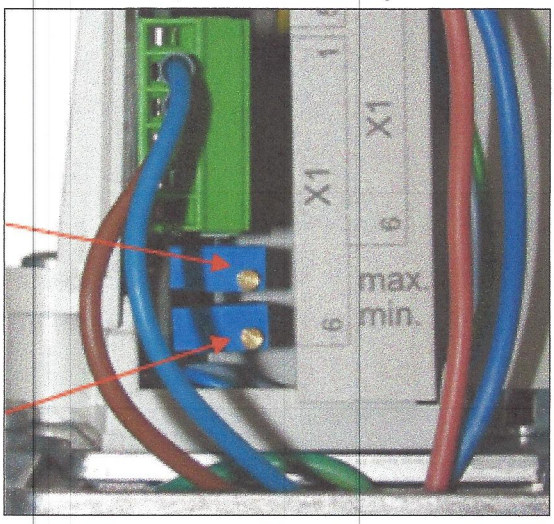


**Figure 3.6.**

The upper limit can be adjusted from 90° down to 60°. The lower range limit can be adjusted from 0° up to either 20° or 30°, depending on the upper limit adjustment. See Figure 3.7 for range and limits.

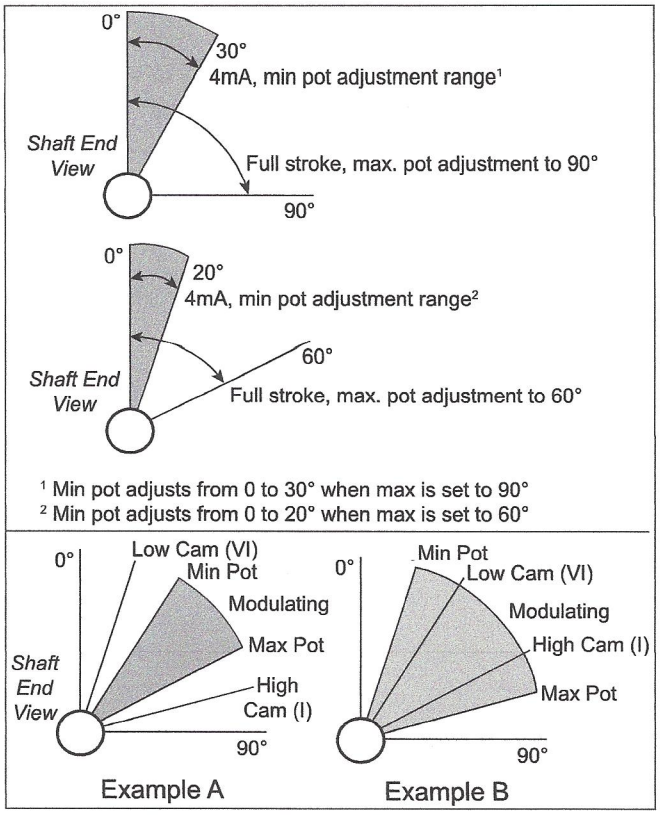


**Figure 3.7. Range Adjustment**

**NOTE:** For typical applications, the cam switches set the physical travel limits and the electrical modulating limits are set to match the cams.

When using position feedback voltage from the switches, be sure that the pot adjustments allow travel to actuate the cam switches.

In Figure 3.7, Example A, the actuator stops before actuating the cam switches.

Application - The burner low fire is above the valve closed position. When the burner is shut off, the valve needs to close to prevent hot air flowing back through the valve. To position a valve closed when the burner is off, turn off the enable input and apply power to the drive low input.

In Figure 3.7, Example B, the actuator stops before the analog input reaches its low or high value.

Application - Two actuators are driven from the same analog signal for limited ranging of a trim valve. The travel of the limited valve is less than a 90 degree stroke. For example, the limited valve can be set to travel from a low cam of 23 degrees and starts driving at 8mA due to the min pot adjustment. Then the high cam is set at 45 degrees and stops travel at 12mA due to the max pot adjustment. The result is that the trim valve remains at its low position (23°) for an analog signal from 4 to 8mA, then it travels open from 8 to 12mA and stays at the set high position (45°) for 12mA to 20mA.

## Connection Terminals

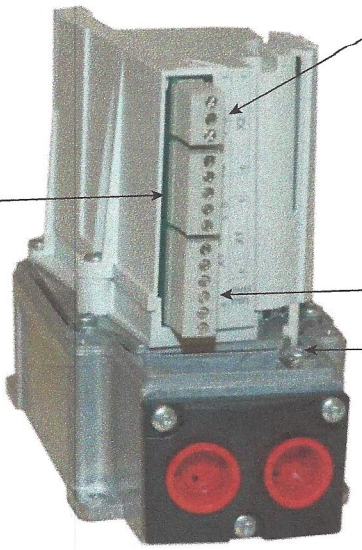

Connector X3

| | |
|---|---|
| 1 | Aux VI N.O. |
| 2 | Aux VI N.C. |
| 3 | Aux VI COM |

Connection X2

| | |
|---|---|
| 1 | Aux V COM |
| 2 | Aux V N.O. |
| 3 | High feedback |
| 4 | Low feedback |
| 5 | Ign feedback |

Connector X1

| | |
|---|---|
| 1 | Drive to ign |
| 2 | Aux IV N.O. |
| 3 | Aux IV COM |
| 4 | Neutral |
| 5 | Drive low/off |
| 6 | Drive high |

Ground (Protective Earth)

**3-Position Step**
Basic version with
2 end switches and
4 auxiliary switches

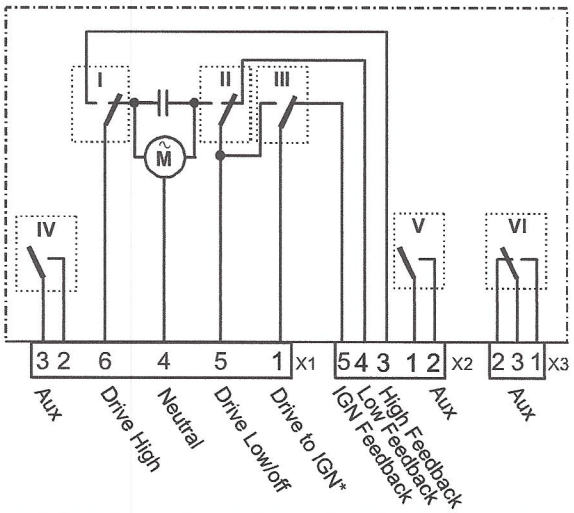


| | | |
|---|---|---|
| aux | GREEN | VI |
| aux | BLACK | V |
| aux | YELLOW | IV |
| ign | ORANGE | III |
| low/off | BLUE | II |
| high | RED | I |

**2-Position Step**
Basic version with
2 end switches,
3 auxiliary switches and
one relay

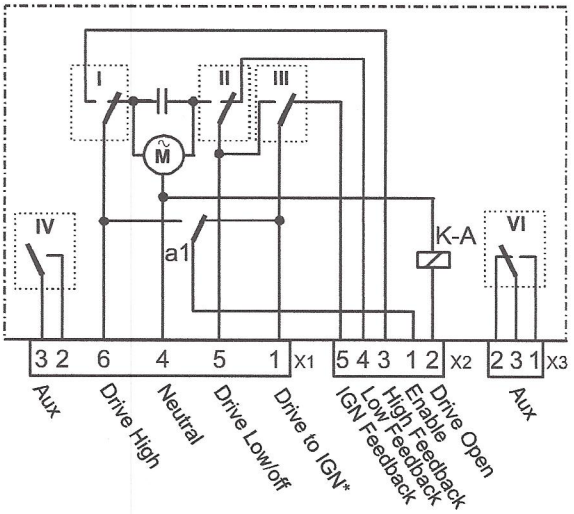


| | | |
|---|---|---|
| aux | GREEN | VI |

| | | |
|---|---|---|
| aux | YELLOW | IV |
| ign | ORANGE | III |
| low/off | BLUE | II |
| high | RED | I |

* Only when driving from high position
**ign** - ignition

**Figure 3.8. Connection Terminals (3-Position & 2-Position Step)**

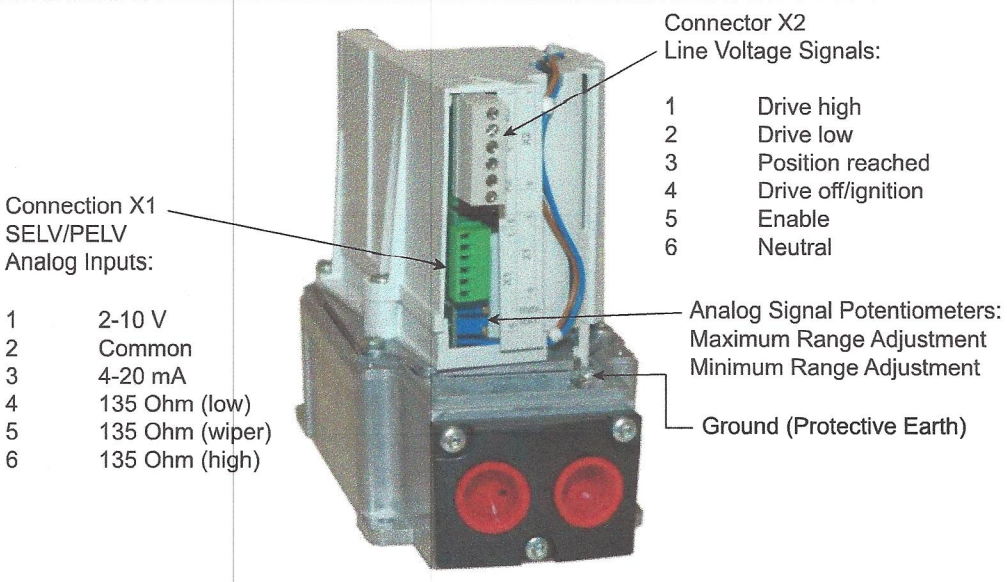


**Electronic Version**

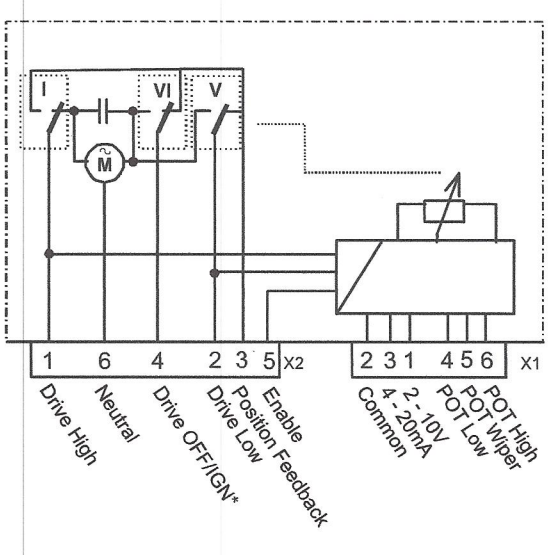


| | | |
|---|---|---|
| OFF/IGN | GREEN | VI |
| low | BLACK | V |

| | | |
|---|---|---|
| high | RED | I |

* Only when driving from high position
**ign** - ignition

**NOTE:** Voltage applied at X2-6 Neutral and X2-5 Enable will power the electronic circuits and allows the analog inputs to drive the actuator. If driving the actuator with the direct voltage connection at X2-1, -2, or -4 then remove power at X2-5 Enable to avoid conflicting drive currents at the motor. SELV or PELV depends on the safety class of the connected devices. For PELV, the device is connected to protective earth (ground).

**Figure 3.9. Connection Terminals (Electronic Version)**

## Cam Positions (Factory Settings)

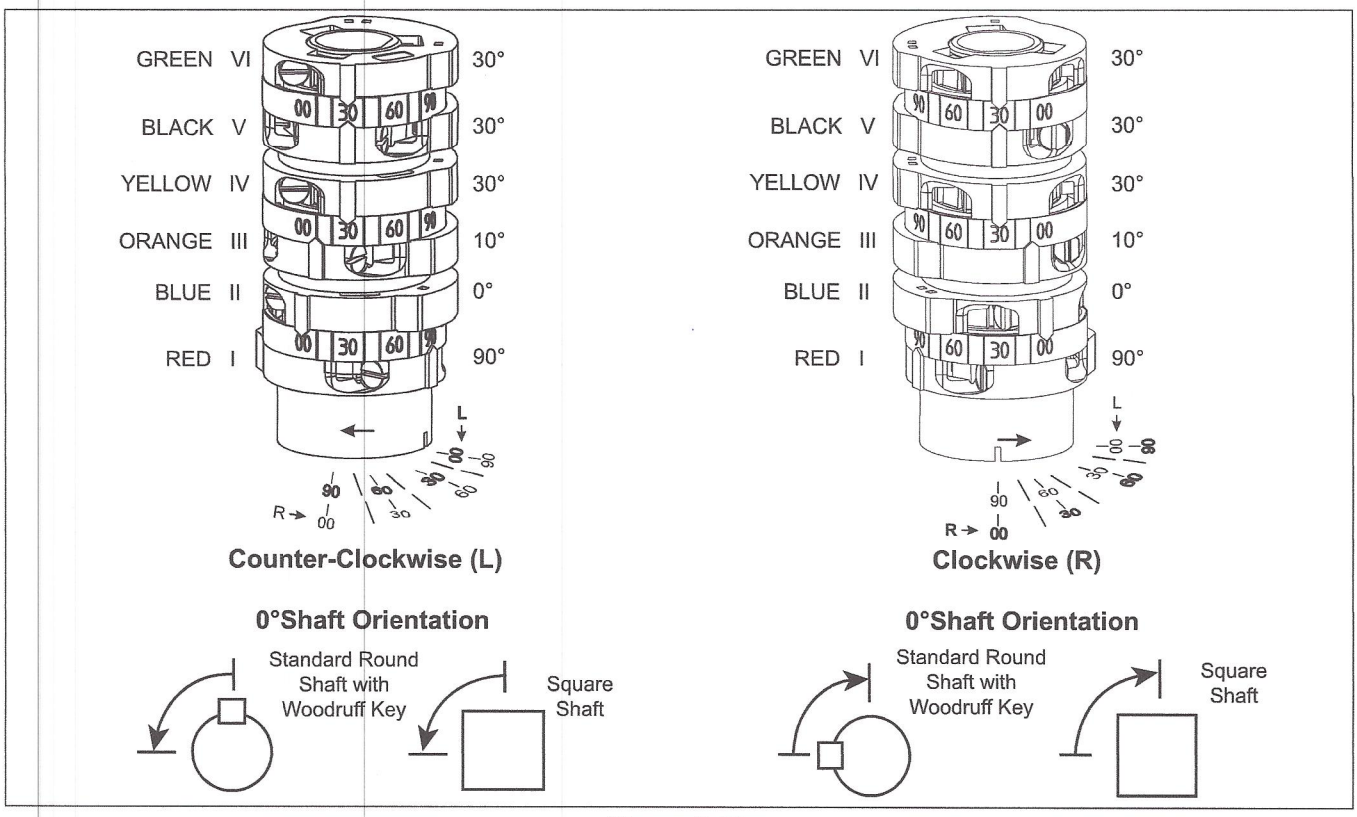


**Figure 3.10.**

### Basic Version, 3-Position Step

| Color | Cam Position | Cam | Presetting |
|---|---|---|---|
| RED | Cam I | High-fire | 90-degree |
| BLUE | Cam II | Off / low-fire | 0-degree |
| ORANGE | Cam III | Ignition position | 10-degree |
| YELLOW | Cam IV | AUX switch | 30-degree |
| BLACK | Cam V | AUX switch | 30-degree |
| GREEN | Cam VI | AUX switch | 30-degree |

### Basic Version, 2-Position Step

| Color | Cam Position | Cam | Presetting |
|---|---|---|---|
| RED | Cam I | High-fire | 90-degree |
| BLUE | Cam II | Off / low-fire | 0-degree |
| ORANGE | Cam III | Ignition position | 10-degree |
| YELLOW | Cam IV | AUX switch | 30-degree |
| GREEN | Cam VI | AUX switch | 30-degree |

### Electronic Version

| Color | Cam Position | Cam | Presetting |
|---|---|---|---|
| RED | Cam I | High-fire | 90-degree |
| BLACK | Cam V | Low-fire | 10-degree |
| GREEN | Cam VI | Off / Ignition | 0-degree |

## Typical Application

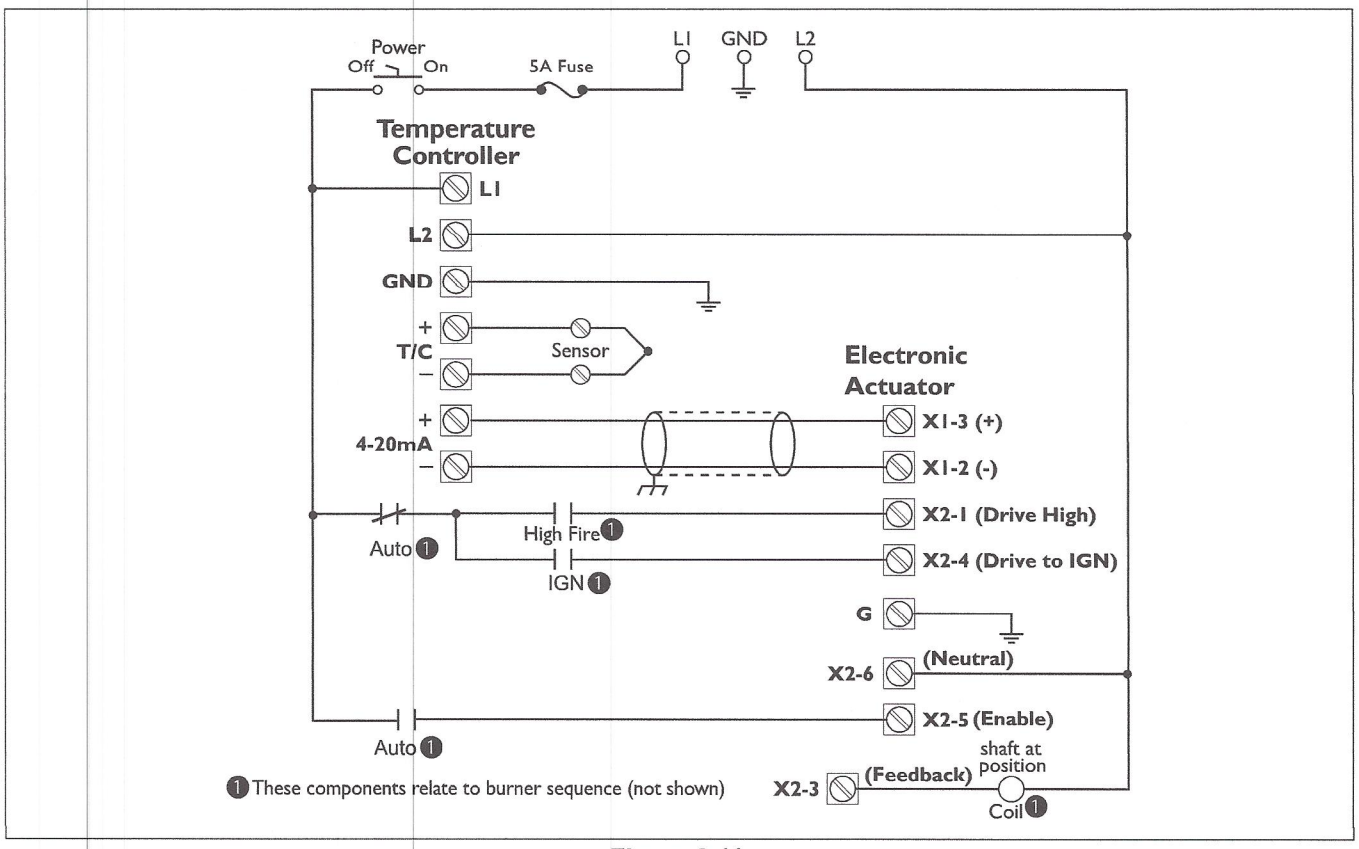


**Figure 3.11.**

This example shows a method for igniting a burner at a firing rate higher than its minimum run position.

- A "High" relay makes contact during the purge cycle. It is controlled from the flame safeguard or customer control. The actuator drives to the high position as set by CAM I.
- The "High" contact opens after the purge time, and the ignition, "IGN" relay makes contact to drive the actuator to the ignition position as set by CAM VI.
- After the trial for ignition, the normally closed "Auto" relay breaks its contact to remove supply power from the "High" and "IGN" relay contacts.
- A normally open "Auto" relay makes contact to supply power to the enable input X2-5. Then the actuator follows the analog input on X1-2, X1-3.
- The analog modulation is between CAM I and CAM V.

**NOTE:** The following diagram is an example of how to use the actuator's various inputs and outputs. Some devices shown may be omitted or changed, depending on your application.

## Checklist After Installation

1. Confirm the alignment and tightness of all mechanical connections.
2. Inspect the terminal wiring for stray wire strands that might cause a short circuit. Check that the wires are properly inserted into the terminals and are not loose. Reinstall the terminal cover.
3. Apply power and verify that the stroke motion is smooth over its entire range.
4. Record the cam settings for future reference.

**⚠ WARNING**

- **After wiring, inspect the seal and install the cover carefully. Make sure cover is seated properly to seal out water.**

# Specifications 4

| Parameter | Description | |
|---|---|---|
| Operating Voltage | AC 120 V -15% / +10%<br>AC 230 V -15% / +10% | |
| Operating Frequency | 50 to 60 Hz ±6% | |
| Power Consumption | 10 VA | |
| Duty Cycle, ED | 100% | |
| Operating Angle | Adjustable between 0 and maximum 90° (scale range) | |
| Mounting Position | Multi-position | |
| Degree of Protection | IP66 / NEMA 4 | |
| Cable Entry | 2 x M16 without thread or 2 x 1/2" NPT thread | |
| Direction of Rotation | Facing the shaft end:<br>clockwise or counterclockwise, dependent on model | |
| Torque | 10 Nm, depending on the type[1] (Holding torque is 5 Nm) | |
| Running Time, 90° stroke | 30 seconds depending on the type[1] | |
| Drive Motor | Synchronous motor, stall protected | |
| Gear Train | Maintenance free gears and bearings | |
| End and Auxiliary Switches | Type | To DIN 41636 |
| | Switching Voltage | AC 24 to 250 V |
| | Switching Capacity | 1A, 250 VAC<br>7A, 250 VAC Peak load < 0.5 seconds |
| Number of End Switches | 2 | |
| Number of Auxiliary Switches | Maximum of 4 | |
| Drive Shaft | Factory supplied, not replaceable | |
| Operating Temperature | -20 to +60 °C (0 to 140 °F) | |
| Storage Temperature | -40 to +70 °C (-40 to 158 °F) | |
| Humidity | <95% RH noncondensing | |
| Weight | Approximately 2 kg | |
| Materials of Construction | Housing | Die Cast Aluminum |
| | Cover | Impact-proof and heat resistant plastic |

[1] At 60 Hz frequency, running times and torques are about 17% less.

## Analog Inputs

| Parameter | Description |
|---|---|
| Linearity | <5% |
| Control Range | 0 to 90° |
| Voltage Range | DC 2 (0) to 10 V |
| Voltage Input Impedance | ≥ 5 kΩ |
| Current Range | DC 4 (0) to 20 mA |
| Current Input Impedance | ≤ 500 kΩ |
| Potentiometer Range | 0 to 135 Ω, ± 5% |

## Wire Size

Cross-sectional area of the power supply lines

| Parameter | Description |
|---|---|
| Line Voltage Terminals | Class 1<br>Min. AWG 18<br>Suited for 105°C<br>Max. 2.5mm$^2$ or AWG 12 |
| Analog Input Terminals | Class 2<br>Min. AWG 22<br>Suited for 105°C<br>Max. 1mm$^2$ or AWG 12 |

## Standards and Certificates

**Conformity of EEC directives:**

Electomagnetic compatibility EMC (immunity) 2004/108/EC

Low voltage directive 2006/95/RC

## Dimensions

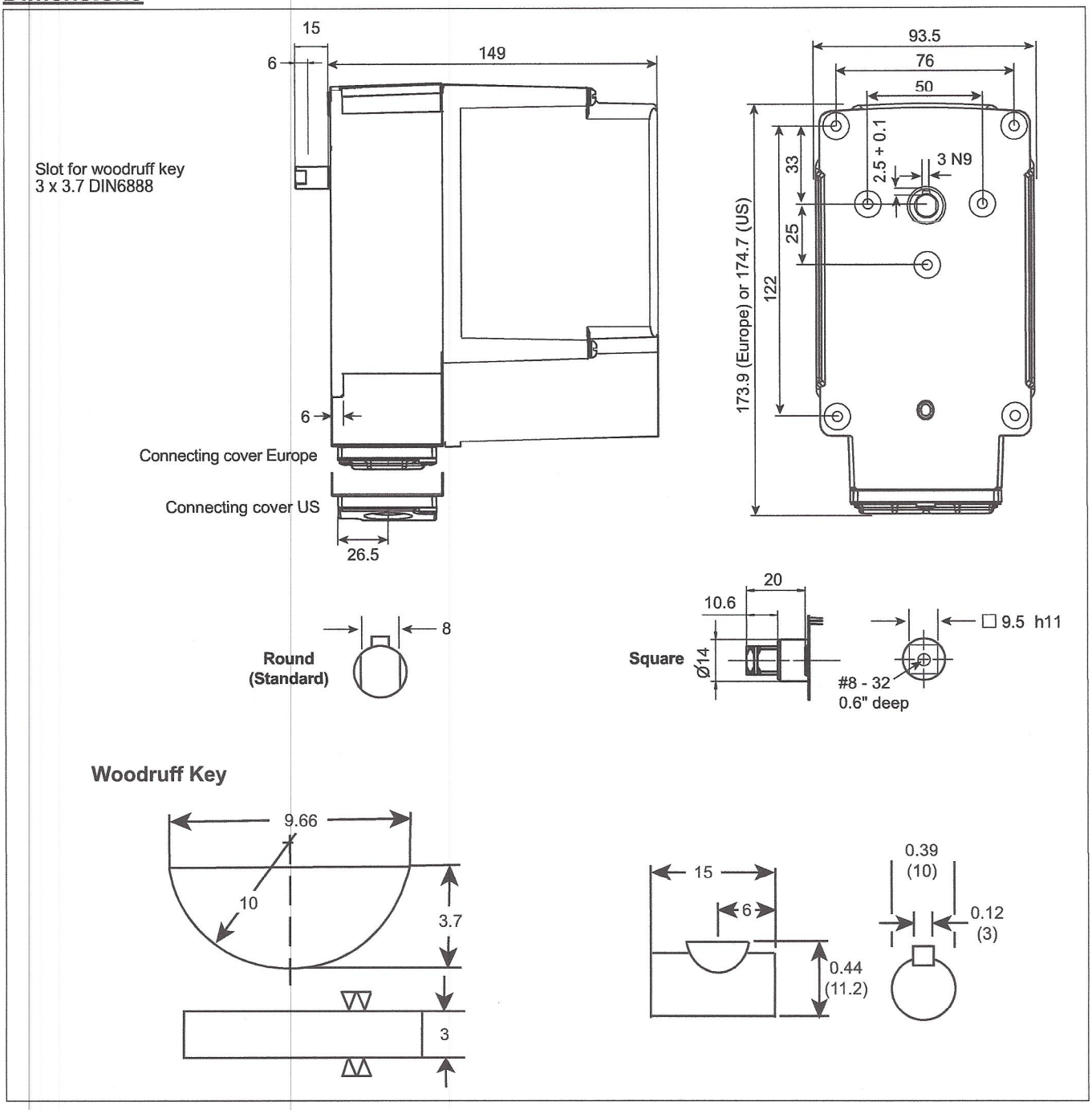


**Figure 4.1.**

# Maintenance & Troubleshooting

5

This section is divided into two parts:

- The first part describes maintenance procedures.
- The second part describes troubleshooting procedures.

## Maintenance

Preventative maintenance is the key to a reliable, safe and efficient actuator. The core of any preventative maintenance program is a list of periodic tasks.

**NOTE**: Monthly and yearly lists are for average intervals. If your environment is dirty, then the intervals may be shorter.

### Monthly Checklist

1. Inspect the actuator for physical damage.
2. Inspect the coupling for loose connections.
3. Observe the shaft while moving for smooth operation.

### Yearly Checklist

1. Inspect the actuator for physical damage.
2. Inspect the coupling for loose connections.
3. Confirm the cam settings are identical to those originally selected.
4. Drive the actuator to its full clockwise and counterclockwise positions and observe the shaft while moving for smooth operation.

## Troubleshooting

| Problem | Possible Cause | Solution |
|---|---|---|
| Actuator will not move with signal | Stalled motor | Correct mechanical problem. |
| | Actuator at low or high fire stop | Normal, check cam settings, reverse control signal direction. |
| | Signal reversed or no signal connection | Refer to wiring. |
| | No power | Check for proper voltage. |
| | Bad wiring connection | Check connections and plugs. |
| | Shaft disengaged | Continue driving until pin K1 engages. |
| Actuator stays at high | Signal applied to drive high terminal | Check external wiring and control system. |
| | Electronic Version: More than one analog signal applied to inputs | Check external wiring and control system. |

## NOTES

ECLIPSE®
Innovative Thermal Solutions

**Offered By:**
Power Equipment Company
2011 Williamsburg Road
Richmond, Virginia 23231
Phone (804) 236-3800
Fax (804) 236-3882

www.peconet.com

# SECTION 7
# DRAFT CONTROL

US FURNACES, LLC MAX 4000

# Series A3000 Photohelic® Differential Pressure Switch/Gage

## Specifications - Installation and Operating Instructions




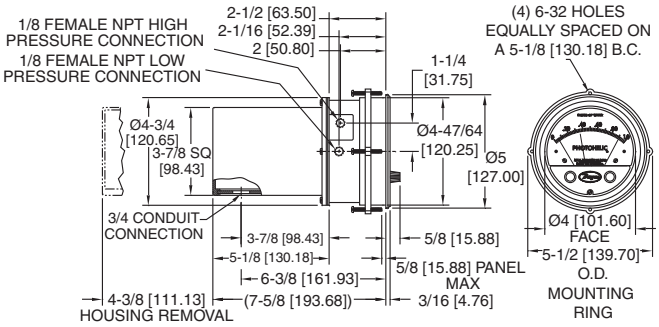


**Fig. A**

**NOTE:** Detailed dimension drawings are available from our Customer Service Dept. for PHOTOHELIC® switch/gages as installed in two optional enclosures. For weatherproof housing, request no. 13-700132-00. /For explosion-proof housing, request no. 13-700113-01.

**The Series A3000 PHOTOHELIC® Switch/Gage** is a versatile 2-in-1 instrument combining a time-proven Magnehelic® differential pressure gage with low/high pressure switches. It is designed to measure and control positive, negative or differential pressure of air or other non-combustible, non-corrosive gases. Gage reading is unaffected by switch operation. Switch set points are easily adjusted with knobs located on gage face. Applied pressure and switch set points are fully visible at all times. Deadband is one pointer width, less than 1% of full scale. Each set point controls a DPDT relay and both relays can be interlocked to provide variable deadband control.

## SPECIFICATIONS

### GAGE SPECIFICATIONS

**Service:** Air and non-combustible, compatible gases.
**Wetted Materials:** Consult factory.
**Accuracy:** ±2% of full scale at 70°F (21.1°C). ±3% on -0 and ±4% on -00 models.
**Pressure Limits:** -20" Hg. to 25 psig (-0.677 to 1.72 bar). MP option; 35 psig (2.41 bar), HP option; 80 psig (5.52 bar). 36003S – 36010S; 150 psig (10.34 bar). 36020S and higher;1.2 x full scale pressure.
**Temperature Limits:** 20 to 120°F.
(-6.67 to 48.9°C) Low temperature option available.
**Process Connections:** 1/8˝ female NPT.
**Size:** 4˝ (101.6 mm) dial face, 5˝ (127 mm) O.D. x 8-1/4˝ (209.55 mm).
**Weight:** 4 lb (1.81 kg).

### SWITCH SPECIFICATIONS

**Switch Type:** Each setpoint has 2 Form C relays (DPDT).
**Repeatability:** ±1% of full scale.
**Electrical Rating:** 10A @ 28 VDC, 10A @ 120, 240 VAC.
**Electrical Connections:** Screw terminals. Use 167°F (75°C) copper conductors only.
**Power Requirements:** 120 VAC, 50/60 Hz; 240 VAC & 24 VAC Power optional.
**Mounting Orientation:** Diaphragm in vertical position. Consult factory for other position orientations.
**Set Point Adjustment:** Adjustable knobs on face.
**Agency Approvals:** UL: File No. E38121, Vol. 1, Sec. 4; CSA: File No. LR22541-34; CE: EN 61000-6-2: 1999, EN 6100-3-2: 2000, EN 61000-3-3: 2000.

## INSTALLATION

**1. Location:** Select a clean, dry, vibration-free location where ambient temperatures will be between 20 and 120°F (-6.67 and 48.9°C). Tubing supplying pressure to the instrument can be practically any length but long runs will increase response time slightly.

**2. Position:** The PHOTOHELIC® Switch/Gage is factory calibrated for use with scale in a vertical plane. Operation at other angles may affect accuracy and/or require zero adjustment. Most models can be specially calibrated at the factory for other positions if specified at time of ordering. Ranges below 1˝ W.C. must be used only with scale vertical.

**3. Mounting:** The PHOTOHELIC® Switch/Gage is normally mounted before making electrical connections. The electrical enclosure is removable at any time regardless of mounting method.

**(A) Panel Mounting:** Normal mounting is flush or through panel as shown in Fig. B. Allow 4-3/8˝ (111.13 mm) clearance behind the unit for removal of electrical enclosure. Make a 4-13/16˝ (122.24 mm) diameter hole in panel. Insert the PHOTOHELIC® Switch/Gage unit from front of panel and slip mounting ring over case from behind with stepped side facing rear. Fit the snap ring into narrow groove at back edge of the bezel. Thread four 6-32 x 1-1/4˝ mounting screws into tapped holes in mounting ring and seat it against snap ring. Tighten screws against back of panel. See Fig. B.

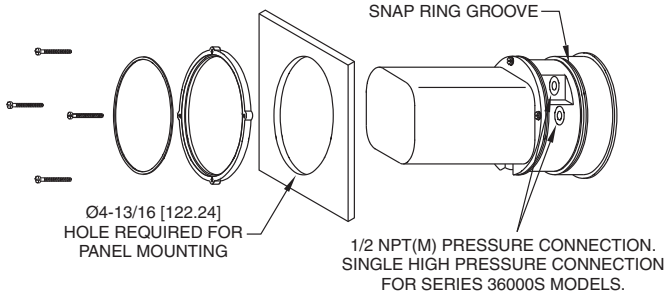


**Fig. B**

**DWYER INSTRUMENTS, INC.**
**P.O. BOX 373 • MICHIGAN CITY, INDIANA 46361, U.S.A.**
**Phone: 219/879-8000**
**Fax: 219/872-9057**
**www.dwyer-inst.com**
**e-mail: info@dwyer-inst.com**

**(B) Surface Mounting with Remote Relays:** Where it is preferred to mount the amplifier-relay unit separate from the gage assembly, the gage is mounted as shown in Fig. B (without amplifier-relay package) or surface mounted as shown in Fig. C. Use the dimensions in Fig. D to locate holes.

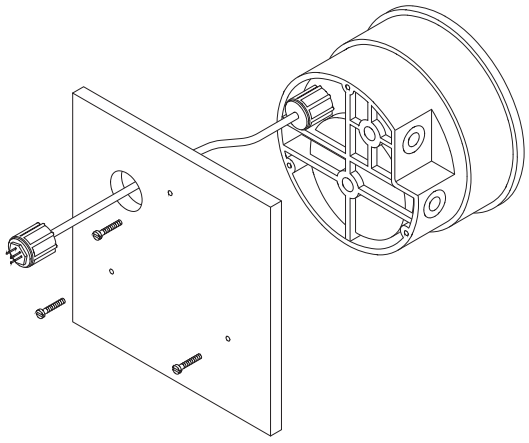

**Fig. C**

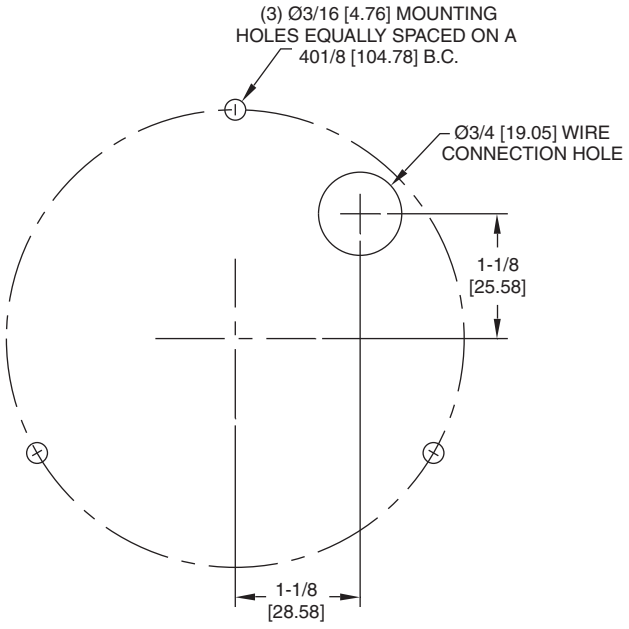


**Fig. D**

**(C) Remote Relays Mounting:** On factory supplied RMR (remote mounted relay) units, the amplifier-relay package will be furnished attached to a mounting plate as shown in Fig. E. Use the hole layout in Fig. F for this option. A five foot cable assembly is included for connecting the two components. Longer cable lengths are available from the factory.

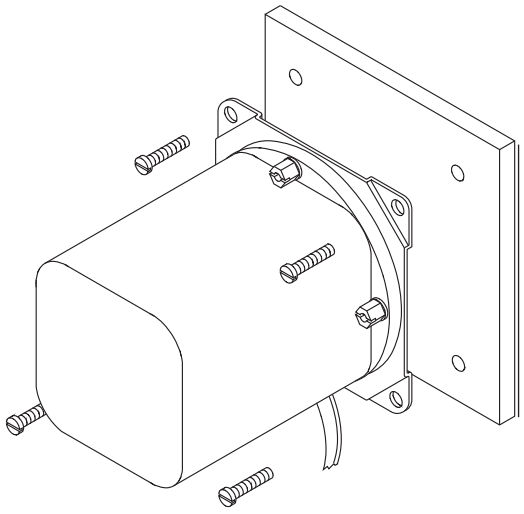

**Fig. E**

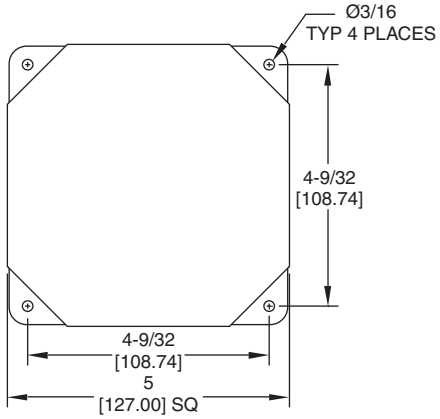


**Fig. F**

**4. Pneumatic Connections & Zeroing:** After installation but before making pressure connections, set the indicating pointer exactly on the zero mark, using the zero adjust screw located at the bottom of the front cover. Note that this adjustment can only be made with the high and low pressure taps both open to atmosphere.

Connect the high and low pressure taps to positive, negative, or differential pressure sensing points. Use 1/4″ diameter metal or other instrument tubing and 1/8″ NPT adapters at the PHOTOHELIC® pressure switch/gage. Adapters for rubber or soft plastic tubing are furnished with the instrument for use where this type of connection is preferred.

If the PHOTOHELIC® Switch/Gage is not used to sense differential pressure, one of the pressure taps must be left open to atmosphere. This will allow the reference pressure to enter. In this case, installation of a Dwyer Instruments, Inc. No. A-331 Filter Vent Plug or similar fitting in the reference pressure tap is recommended to reduce the possibility of dust entering the instrument.

**NOTE:** If the PHOTOHELIC® switch/gage is over pressured, pointer may “jump” from full scale back to zero and remain there until the excess pressure condition is relieved. Users should be aware of possible false zero pressure indications under this condition.

## ELECTRICAL CONNECTIONS

**1. Cover:** The amplifier-relay unit has an easy to remove housing. Remove the three (3) screws as shown in Fig. G and slide the housing off. Make all the electrical connections before reinstalling and refastening the housing.

**2. Conduit:** Electrical access to the connection box portion of the relay housing is by bottom opening for 3/4˝ conduit. Use of flexible conduit is recommended. It should be supported from the panel or other suitable surface to prevent the wiring system from exerting undue strain on the instrument. See Fig. G.

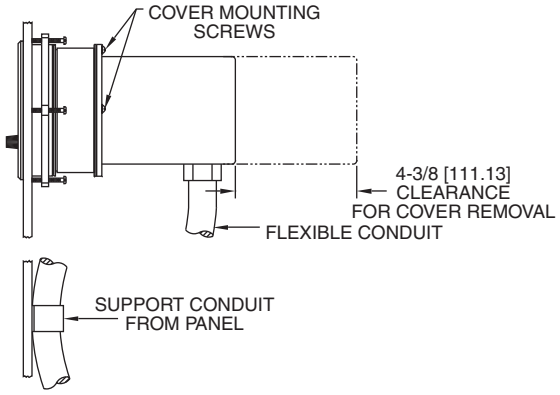


**Fig. G**

**3. Terminal or Connection Board Layout:** In Fig. H "Terminal Board," Section A contains the connections for the load or slave relay actuated by the high or right set point. This relay is a double pole, double throw type. The two right connections are normally closed, the two middle connections are normally open, and the left connections are the common pair. The relay is in its normal or De-Energized position when pressure is below the right hand set point.

**Section D** is exactly the same as **Section A** except that its load or slave relay is controlled by the low or left set point. The De-Energized position is below the left hand pointer set point.

**Section B** contains the external connections to the holding coil circuit for the high or right set point relay and **Section C** contains similar connections for the low or left set point relay. The function and use of these connections varies somewhat depending on the circuit style of the instrument. See paragraphs 5 and 6 for details.

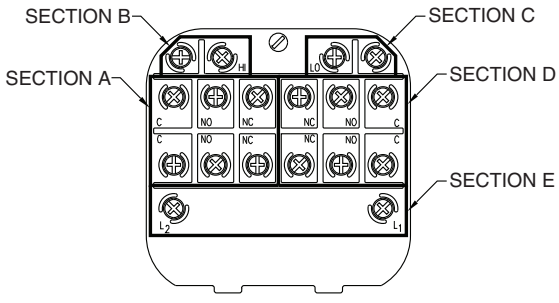


**CAUTION:** Do not apply electrical current to terminals in Sections B and C.

**Fig. H**

**Section E** contains the power connections for the control unit transformer primary. The transformer in turn supplies reduced voltage power for the LED, phototransistor, amplifier unit, and load relay pull in and hold coils. Connections must always be made to this section in order to put the unit in operation. Standard units are designed for 120 VAC input to the transformer. Special units are also available for other voltages.

**Separate Ground Wire** attachment is provided for by a No. 6-32 screw on the mounting bracket near the conduit opening. An additional ground wire connection is located on the side of the gage body for use when the amplifier-relay unit is mounted remotely.

**Single Set Point** instruments are furnished with the right or high set point components and circuitry in place. These are connected to Sections A and B of the terminal board. The left or low set point components are omitted.

**4. Circuit Style:** The PHOTOHELIC® SWITCH/GAGE is available with several factory installed optional internal circuits. They are identified as to style by a label shown in Fig. J. This label is mounted prominently on the terminal board of each instrument. The letter H denotes a circuit in which the relay can be made to latch or remain energized after pressure increase to its set point.

The letter L denotes a circuit in which the relay can be made to latch or remain de-energized after pressure decrease to its set point. Two letters are required to fully identify a dual set point unit. Thus, circuit style HH, which is standard, is a dual set point circuit which has provisions for latching on pressure increase to either set point. Single relay unit or L for the special low latch unit. Units for use with other than standard 120 VAC will be so indicated on the label.

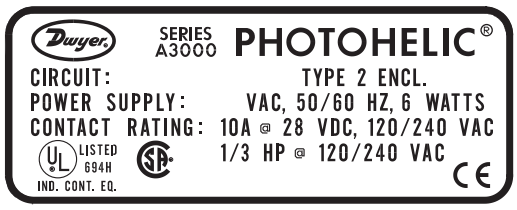


**Fig. J**

**5. Dual Set Point Automatic Reset:** Circuit Style HH is used for simple on-off switching applications. To place in service, connect load circuits to the appropriate terminals in Section A (Fig. H) for the right set point and Section D for the left set point. Note that the N.O. contacts are open when the gage pressure pointer is to the left of the set point pointers. No connections are necessary in Sections B and C. Make external ground connections as required and connect power to Section E for the control unit. To use circuit style LL for automatic reset, a jumper wire must be installed between the two terminals in Sections B and/or C.

**6. Dual Set Point Manual Reset:** Circuit Style HH may also be used for manual reset applications where it is required to maintain contact on either relay following pressure increase above its set point. Load or signal connections are made to the appropriate terminals in Sections A and D (as in paragraph 5 above). Connect terminals in Sections B and C through normally closed switches or push buttons as shown in Fig. K. Use of "dry-circuit" type switches such as a Dwyer Part No. A-601 with paladium, gold, etc. or rotary wiping action type contacts is recommended. Make external ground connections as required and connect power to Section E for the control unit.

Circuit style LL is used for manual reset applications which require that contact be maintained following pressure decrease below the set point. Load connections are made to the appropriate terminals in Sections A and D. A normally open type manual reset switch such as Dwyer® Instruments, Inc. Part No. A-601 is connected to the terminals in Sections B and C. The circuit must be "armed by momentarily closing the switch while the black pointer is to the right of the set point. From that point on, the circuit will latch on pressure decrease below the set point and remain latched on pressure increase until manually reset with the optional switch.

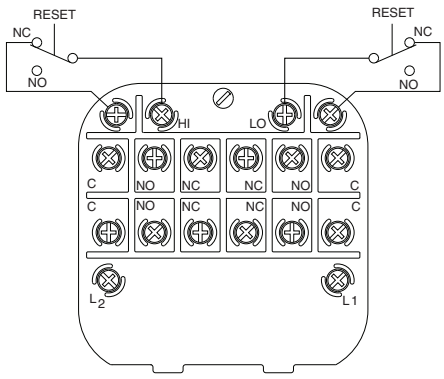


**CAUTION:** Do not apply electrical current to terminals in Sections B and C.
*Manual Reset with Circuit HH*

**Fig. K**

**7. Dual Set Point Automatic and Manual Reset Combinations:** Circuit Style HH may be used with either set point wired and operating as in paragraph 5 above and the other set point wired and operating as in paragraph 6.

**8. High Low Limit Control - Dual Set Point:** Circuit Style HH may be used to control fans, dampers, pumps, etc., between the set points of a PHOTOHELIC® Switch/Gage. To accomplish this, use one set point relay to reset the other as shown in the wiring diagram Fig. L. In this typical application, the load (for instance a fan) would be connected to the N.C. contacts for the right set point relay Section A (Fig. H). On pressure rise to the right set point, its relay would pull in and hold even though pressure might then fall below that set point . I the pressure continued to fall to the left set point, its relay would automatically be DE-ENERGIZED, return to its normal position and in so doing, open the holding coil circuit from Section B (Fig. H). The right set point relay would thus be reset and the cycle could repeat.

**9. Dual Set Point Special Purpose Circuits:** Circuit Style LL may be used where manual reset following maintained contact on pressure decrease to either set point is required. Circuit Styles HL and LH are combination units. For special combinations of features, special units, and detailed instructions regarding their use, consult the factory.

**10. Single Set Point PHOTOHELIC®:** The single set point PHOTOHELIC® Switch/Gage is furnished with the right set point only. Terminals in Sections A and B (Fig. H) are connected to this relay. Circuit Style SRH is wired for automatic reset as in paragraph 5 above. Manual reset is accomplished by adding a normally closed reset switch or push button to the circuit as described in paragraph 6 above.

**11. Single Set Point Special:** Manual reset after actuation on falling pressure can be obtained by using Circuit Style SRL. Consult the factory for special units and detailed instructions regarding their use.

**12. Placing in Service:** In normal operation each relay is de-energized when the pressure applied to the instrument is below its set point. Special low-latching units will ordinarily have to be reset before placing on the line in normal operation.

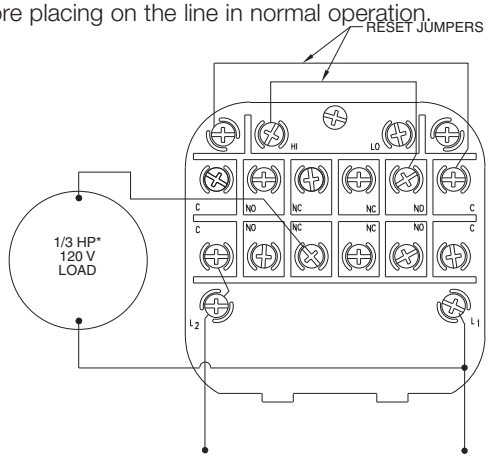


***Note:** For larger motors, use the Photohelic® Switch/Gage in a maintained contact, 120 Volt Control or Push Button Circuit of the motor

**Fig. L**

**13. Failure Mode:** The PHOTOHELIC® Switch/Gage circuit design provides certain protection in the event of a loss of pressure or electrical power. In either case, both relays will de-energize, returning to their normal "zero pressure" state. The exceptions to this are models with center zero ranges. Because the relays on all standard models are always energized when the indicating (black) pointer is to the right of their respective set points, the relay action on loss of pressure will depend on set point position, since either of them could be located to the left of zero. As an example; if the left pointer were set at -2 in. w.c. and negative pressure was -3 in. w.c., a loss of that pressure would allow the black pointer to return to the center and thus cause the low set point relay to energize.

If the LED should burn out, only the left-low relay will de-energize. The right-high relay will react as if pressure were above its set point and will remain energized even though pressure might be below that setting. In this situation, only termination of electrical power will allow the right-high relay to de-energize.

**MAINTENANCE AND SERVICE**

Dwyer Instruments, Inc. PHOTOHELIC® Switch/Gages are precision instruments, expertly assembled and calibrated at the factory. They require no lubrication or periodic servicing. If the interior is protected from dust, dirt, corrosive gases and fluids, years of trouble-free service may be expected. Zero adjustment should be checked and reset occasionally to maintain accuracy. The PHOTOHELIC® Switch/Gage is not field serviceable and should be returned if repair is needed (field repair should not be attempted and may void warranty). Be sure to include a brief description of the problem plus any relevant application notes. Contact customer service to receive a return goods authorization (RGA) number before shipping.

©Copyright 2009 Dwyer Instruments, Inc.
Printed in U.S.A. 7/09 FR# 13-440202-04 Rev. 5

**DWYER INSTRUMENTS, INC.**
**P.O. BOX 373 • MICHIGAN CITY, INDIANA 46361, U.S.A.**
**Phone: 219/879-8000** **www.dwyer-inst.com**
**Fax: 219/872-9057** **e-mail: info@dwyer-inst.com**

# SECTION 8
# REMOTE CONTROL

US FURNACES, LLC MAX 4000

CONTROL CHIEF®

WIRELESS SOLUTIONS

# TeleChief® Series TM2000 / TM4000 / TM6000

## Owners Manual

Failure to return the Warranty Registration document (enclosed) to Control Chief within 30 days of purchase will void any warranty responsibilities on behalf of Control Chief Corporation

**Control Chief Corporation**
**200 Williams Street Bradford, PA 16701**
**814-362-6811 * 1-800-233-3016 * 814-368-4133 (fax)**
**www.controlchief.com**

95-00-0-036

Control Chief Corporation, a world leader in wireless radio and infrared remote control products has developed and expanded upon this powerful technology. More than three decades of experience in designing, manufacturing and installing state-of-the-art remote communication systems emphasize Control Chief's mission.

Our systems are tailored to virtually any environment or application. Control Chief provides training, technical support, and comprehensive system design to maximize performance. It is our honor to uphold this reputation of innovative engineering and superior product performance.







Publication: 95-00-0-036 Rev D
Copyright © 2002, 2003, 2007 Control Chief Corporation
All Rights Reserved.

200 Williams Street, Bradford, Pennsylvania, 16701
Web Page: www.controlchief.com
Telephone: (814) 362-6811, FAX: (814) 368-4133

**1.0 Radio Warranty**
- 1.1 Warranty
- 1.2 Warranty Period
- 1.3 Warranty Service
- 1.4 Excluded Parts
- 1.5 Remarks

**2.0 Safety**
- 2.1 Safety Considerations
- 2.2 Symbols
- 2.3 Warnings

**3.0 Standard Components**
- 3.1 Receiver (RX)
- 3.2 Transmitter (TX)
- 3.3 Accessories per Radio Transmitter

**4.0 Installation Procedure**
- 4.1 General Precautions
- 4.2 Receiver Preparation
  - 4.2.1 Power Supply Selection
  - 4.2.2 Open / Closed Setup
- 4.3 Receiver Installation
  - 4.3.1 Radio Schematics
- 4.4 Remote Setting
- 4.5 Transmitter Setup

**5.0 Operation**
- 5.1 Standard Operation
- 5.2 Emergency Shutdown Procedure

**6.0 Basic Troubleshooting and Maintenance**
- 6.1 General Precautions
- 6.2 General Error Code and Resolutions
- 6.3 Change of Fuse
  - 6.3.1 DC Type
- 6.4 Change of Frequency / Crystal

**7.0 Function Settings**

**8.0 Specifications**
- 8.1 General
- 8.2 Transmitter
- 8.3 Receiver

**9.0 Receiver Mounting Diagram**

# 1.0 Radio Warranty

**1.1 Warranty.** Control Chief Corporation guarantees that this equipment meets its published specifications at the time of shipment from the factory. This equipment will perform as described if installed properly. However, Control Chief cannot guarantee that operation of remote control system is absolutely error-free, or without interruption.

**1.2 Warranty Period.** This equipment is warranted against defects in materials and workmanship for a period of one (1 year from the date of shipment. During the warranty period, Control Chief is responsible for necessary repairs/replacement as long as the product can be proven defective.

**1.3 Warranty Service.** For warranty service or repair, this equipment must be returned to Control Chief Corporation. Customer is responsible for shipping charges to Control Chief. Control Chief's warranty covers only parts and factory labor. No onsite in and out charges are covered under this warranty.

**1.4 Excluded Parts.** This warranty does not include consumable parts such as joysticks, batteries, fuses, buttons, and relays. Also, this warranty does not cover defects caused by improper installation, improper/insufficient maintenance, unauthorized modification, improper operation, ignorance of environmental specifications, and/or improper software/interfacing.

**1.5 Remarks.** No other warranty is expressed or implied, except for the above mentioned. The remedies provided herein are the buyers' sole and exclusive remedies. Control Chief shall not be liable for any direct/indirect, special, incidental, or consequential damage. Consult Control Chief's general warranty for further information.

# 2.0 Safety

**2.1 Safety Considerations**

1. The safety guidelines in this manual are not intended to replace any rules or regulations or any applicable local, state, or federal governing laws. The following information is intended to be used in conjunction with other rules or regulations already in existence. It is important to read all safety information before operating any wireless radio remote control system.

2. Only properly trained persons designated by management should be permitted to operate wireless radio controlled equipment. Wireless radio controlled equipment should not be operated by any person who cannot read or understand signs, notices and operating instructions that pertain to the equipment.

3. Wireless radio controlled equipment should not be operated by any person with insufficient eyesight or hearing or by any person who may be suffering from a disorder or illness or is taking any medication that may impair judgment or the ability to operate equipment.

4. Do not use this device during electrical storms or under conditions of electrical interference, due to the potential for equipment communication issues. Ensure transmitter batteries are in good condition and power for receiver is correct. Installation and maintenance should be done only while the controlled equipment main power and receiver's power are off and locked out to prevent electrical shock.

5. Any person operating wireless radio controlled equipment should possess the following knowledge and/or skills:

- Knowledge of hazards peculiar to equipment operation
- Knowledge of safety rules for radio controlled equipment
- Knowledge of standard methods of hand and/or non-verbal signaling
- Knowledge of the radio transmitter
- Limit switch test procedure
- Proper clearance of all moving parts on the radio controlled equipment
- Proper storage space for radio control transmitter when not in use
- Transferring radio control transmitter to another person
- Reporting unsafe or unusual operating conditions
- Remote controlled equipment capacity and limitations
- Procedures for testing controlled equipment

6. Aisles between equipment, stock, etc., should be free of obstructions so the radio control operator can move freely. These aisles should meet local regulations.

7. Radio controlled operators should always position themselves for the best view of the equipment they are controlling. The equipment should never be operated blindly. The operator should always remain at a safe distance, without losing line of sight with the equipment.

8. Transmitter switches should never be mechanically blocked ON or OFF for any equipment motion. When not in use turn the transmitter off (STOP).

9. After daily operation, shut off main power in crane/machine and the power to the receiver. A secure storage space should be designated for the transmitter unit especially when not in use. This precaution is intended to prevent unauthorized use of the equipment.

10. The equipment operator should keep all body parts away from any moving parts and should never be positioned under a lifted load. Do not make a lift or move a load if anyone is in a location where they could be struck by the crane/equipment or the load.

11. If the equipment fails to respond properly, the crane/equipment operator should stop operation, turn the transmitter off (STOP). The operator should immediately report the condition to his/her supervisor.

12. The crane/equipment operator should turn off the transmitter and take it with him/her when and if boarding the equipment.
13. Remote control operation should NEVER be used for "people moving" applications. Never use remote operation if there are people aboard the controlled equipment. The remote control operator should NEVER "ride" on the controlled equipment.

**WARNING**
ALWAYS PLACE CRANE/EQUIPMENT IN MANUAL OPERATION AND SECURE THE WIRELESS REMOTE CONTROL TRANSMITTER PRIOR TO PERFORMING ANY MAINTENANCE.

14. The equipment has been tested for correct operation before delivery from the factory. However, it must not be used in critical or hazardous operation where incorrect operation may cause personal or equipment damage. If the equipment fails to respond or behaves improperly, the equipment operator should NOT operate the equipment AND should notify his/her supervisor immediately. When serious conditions are noticed (conditions that make the crane/equipment unsafe to operate), the equipment should be shut down immediately and the supervisor notified.

**CAUTION**
THE RECEIVER UNIT OR RELAYS ARE NOT RATED AS EXPLOSION PROOF. THE RECEIVER UNIT MUST NOT BE INSTALLED OR OPERATED IN EXPLOSIVE ENVIRONMENTS UNLESS APPROPRIATE SECONDARY ENCLOSURE MEASURES ARE TAKEN.

**WARNING**
THE UNIT MUST BE WIRED TO THE CORRECT VOLTAGE; FAILURE TO DO SO MAY DAMAGE THE SYSTEM.

**NOTE**
IN AN EMERGENCY, PUSH "STOP" TO STOP RADIO REMOTE CONTROLLED EQUIPMENT.

## 2.2 Symbols

1. This product and related documentation must be reviewed for familiarization with safety markings and instructions before operation. This product requires strict adherence to instructions in order to ensure operational safety. The following symbols may be found on the remote control or throughout the remote control documentation. Their purpose is to alert you to potentially dangerous situations.



**Refer To Manual**
When the product is marked with this symbol refer to the instruction manual for additional information.



**High Voltage**
Indicates presence of hazardous voltage. Unsafe practice could result in severe personal injury.



**Protective Earth Ground**
Indicates protective earth terminal.



**Warning**
Denotes hazard. Included text will give proper instructions. Failure to follow instructions could result in severe personal injury and/or property damage.



**Caution**
Denotes hazard. Included text will give proper instructions. Failure to follow instructions could result in minor personal injury and/or property damage.

## 2.3 Warnings



1. Read this manual carefully before operating and installing this product.
2. Due to the complex nature of equipment, it is necessary to read the entire manual before installation.
3. Only authorized personnel should service this equipment. Unauthorized work on this unit will void the warranty.
4. This manual is for reference only; please call your distributor or Control Chief if further assistance is required.



5. The equipment has been tested for correct operation before delivery from the factory. However, it must not be used in critical or hazardous operation where incorrect operation may cause personal or equipment damage.
6. After daily operation, please shut off main power in crane/machine and the power to the receiver.
7. Transmitter should be placed in a safe place when not in use to avoid accidental pressing of buttons.
8. The crane/machine should be equipped with mainline contactor, limit switches, and other required safety devices as dictated by CMAA, OSHA, or all other applicable governing regulations.



9. The GND (ground) of receiver must be connected to ground of crane/machine, or electrical shock can occur.
10. Do not use this device during electrical storms or under conditions of electrical interference.
11. Ensure transmitter batteries are in good condition and power for receiver is correct.



12. Installation and maintenance should be done only while the crane/machine's main power and receiver's power are off and locked out to prevent electrical shock.
13. Contents of the manual may be amended by the manufacturer without notice.

# 3.0 Standard Components

A standard TeleChief® wireless pendant system consists of a single (1) receiver and one (1) or two (2) handheld transmitters. AC and DC input voltage receivers are available. See paragraph 4.2.1 for available variants.

*Note: All replacement part orders require the System Serial Number and the Channel Number for proper frequency matching.*

### 3.1 Receivers




TM2000 AC Receiver, Part Number = 701P0040
TM2000 DC Receiver, Part Number = 701P0040-DC

TM4000 AC Receiver, Part Number = 701P0060
TM4000 DC Receiver, Part Number = 701P0060-DC

TM6000 AC Receiver, Part Number = 701P0080 (shown)
TM6000 DC Receiver, Part Number = 701P0080-DC

### 3.2 Transmitters



TM2000 Transmitter, Part Number = 701P0004



TM4000 Transmitter, Part Number = 701P0006



TM6000 Transmitter, Part Number = 701P0008

### 3.3 Accessories Per Radio Transmitter

1. Alkaline batteries (2 pieces)
2. Strap for transmitter (1 piece)
3. Owners manual (Part number 95-00-0-036)

# 4.0 Installation Procedure

**4.1 General Precautions**

1. Observe all safety precautions when climbing or working on the machine.
2. Turn off the main power source of crane/machines before installation to avoid electric shock. Lockout/Tagout the main power source.
3. Receiver must be installed as to not touch any part of the crane/machine or structure during the operation, except for mounting provisions.
4. The receiver must be fastened securely via shock-proof mount provided.
5. Before installation, inspect the crane/machine's safety devices and make sure everything is in proper working condition.
6. To avoid any interference, the receiver must be located away from motors, frequency drives, and power cables (Section 4.3).
7. **Coil suppressors are recommended on all contactor coils and relay coils. Control Chief recommends RC type suppressors (Control Chief part number 0700-8002).**
8. In outdoor applications make sure all case fasteners are tightened firmly. The recommended torque setting is 35-40 inch-pounds. Make sure cord grip is secure. If the receiver is mounted with the antenna facing sideways or upwards, wiring pigtail must be positioned with a drip loop. See illustration for preferred mounting.

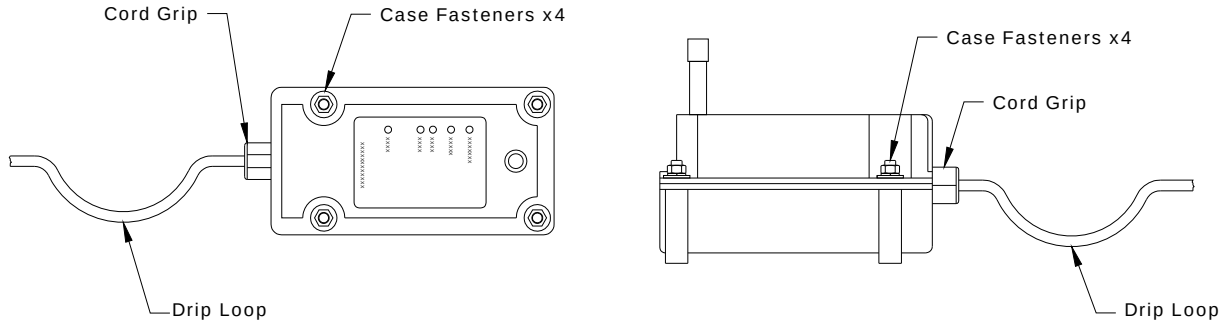


**4.2 Receiver Preparation**

**4.2.1 Power Supply Selection**

There are two types of power voltage (DC and AC) available for the TeleChief® Series:

DC Type

Input voltage: 12~24VDC. Wire + DC to Power 1 (black) and DC - to Power 2 (white).
Relay Contact: 15A-32VDC

AC Type (3 different transformers: 48/110V, 110/220V, 220/380V)

The voltage selection jumper is:

| | LOW | HI |
|---|---|---|
| 1. AC 48 / 110 V Transformer | 48V | 110V |
| 2. AC 110 / 220 V Transformer | 110V | 220V |
| 3. AC 220 / 380 V Transformer | 220V | 380V |

1. Locate the Hi/Low jumper to the lower left of the transformer.
2. Place the jumper connecting the two pins to enable the correct transformer setting as shown in the chart above.

*Note: The default transformer is the 48V/110V version and jumper is normally set on Hi. Please contact your distributor for other options and lead-times.*

### 4.2.2 Normally Open / Normally Closed Setup

The TeleChief® Series provides 2 different outputs for the R0/START relay: N.O. and N.C. The N.O. is the default setting. If an N.C. output is necessary, please remove the No. 8 wire (RO/Start) from the connector and insert it into No. 10 as shown in steps 1 through 4 below:

NC Procedure:

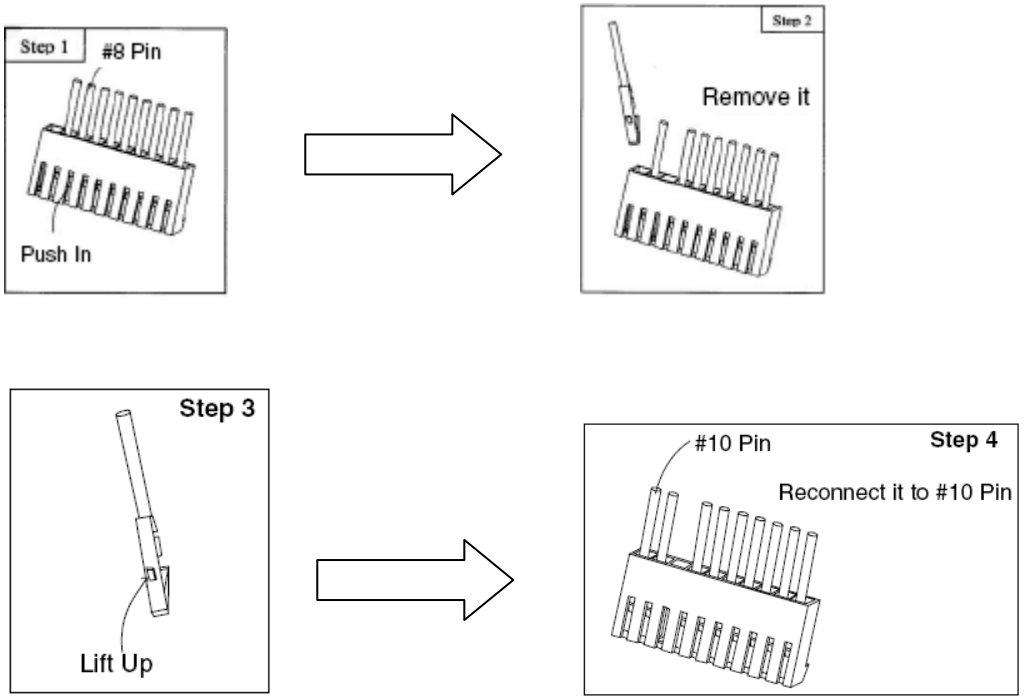


### 4.3 Receiver Installation

1. Turn off main power to the crane/machine.
2. Locate a proper place for the receiver.
   a. Select a stable place free from electrical noise, vibration, excessive heat, etc.
   b. Select a location that is visible from the operator's location.
   c. Select a location at least 3 feet away from motors, relays, power cables, and frequency converters.
   d. Keep away from high voltage wiring and devices.
   e. The receiver box must be at least 1.5" (4cm) from other obstacles.
3. Drill four (4) 6 mm holes for the receiver mounting the unit with the included hardware.
4. Connect wires to the control circuit of the crane/machine according to the wiring diagram of the receiver. (Shown in Section 4.3.1)

TeleChief® Series Receiver

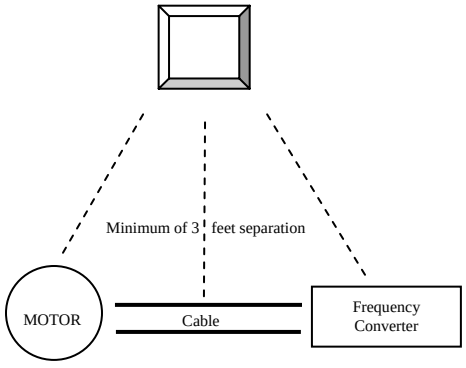


5. Secure the cable between the receiver and the machine so that the cable sheath will not wear out due to vibration.
6. Complete Section 4.5 and test every function of the radio control making sure all motors are correct.
7. Secure the cover making sure not to pinch any wires between the case and the lid.
8. This completes the receiver installation.

### 4.3.1 Radio Schematics

**AC Models**

TM2000

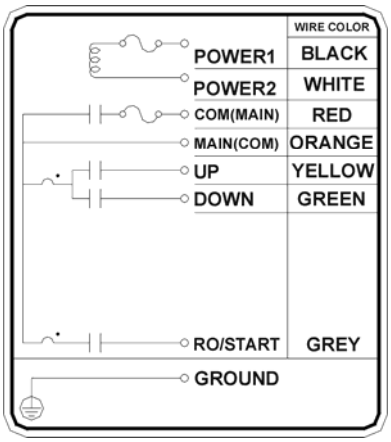


4-button wiring schematic

TM4000

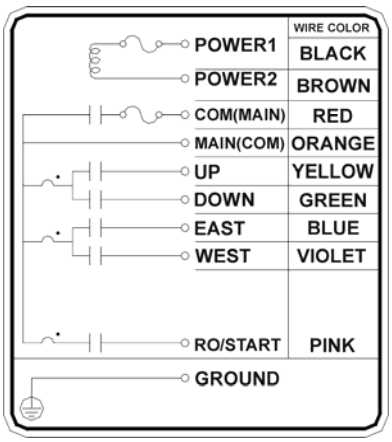


6-button wiring schematic

TM6000

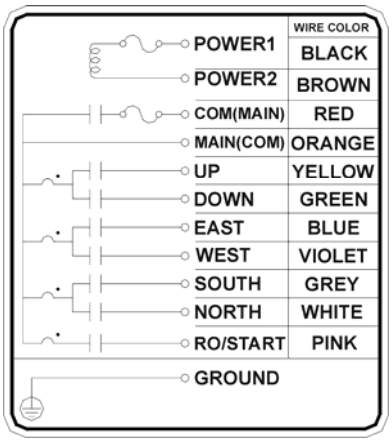


8-button wiring schematic

**DC Models**

TM2000

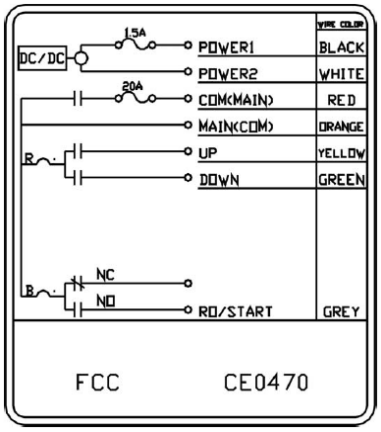


4-button wiring schematic

TM4000

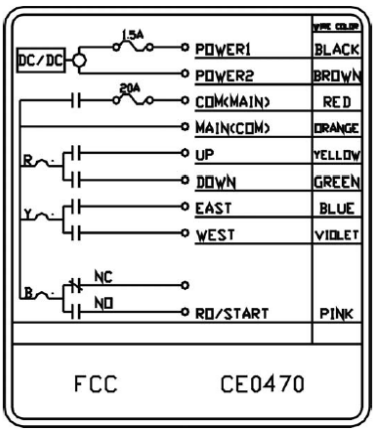


6-button wiring schematic

TM6000

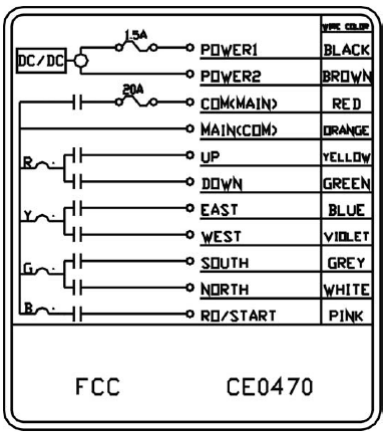


8-button wiring schematic

**4.4 Remote Setting**

Remote setting allows you to pair the new transmitter and receiver if either of them becomes damaged. In order for the radios to work the transmitter and receiver must have the same ID codes and frequency. Using remote setting will set both the transmitter and receiver to have the same ID codes.

1. Please ensure the following conditions are met before attempting the remote setting procedure.
   a. Both the transmitter and receiver are of the SAME model and frequency.
   b. To place the transmitter as close as possible to the receiver to avoid any interference.
   c. Turn off the receiver power and turn it on again.
   d. Complete the "remote setting" within 4 minutes after turning on the receiver. The receiver will NOT accept the remote setting signal after 4 minutes has elapsed.
2. Remote Setting instructions
   a. Press and hold the transmitter STOP pushbutton.
   b. Press the DOWN pushbutton and hold it.
   c. Press the UP pushbutton 4 times and release "STOP & DOWN" pushbuttons when the red light flashes.
   d. Start the system per General Operation (Section 5.0).




ATTENTION:
* In case the remote setting procedure fails, repeat the instructions above within 4 minutes.
* The remote setting procedure will update the ID code only. It will not change function settings.
* All same model systems within the operating distance on the same frequency will be paired with the transmitter's ID code.

**4.5 Transmitter Setup**

Two (2) AA size alkaline batteries are required for the transmitter. The LED will flash GREEN when the battery power is sufficient. The LED will flash RED when the battery power is low.

*Note 1: The operating distance will decrease when the batteries are low.*

*Note 2: Replace with new batteries when battery power is low.*

*Note 3: Re-chargeable batteries are NOT recommended, use only alkaline batteries*.

# 5.0 Operation

**5.1 Standard Operation**

1. Turn-on the main power switch of the equipment.
2. Install two (2) AA size alkaline batteries in the transmitter.
3. Press the Start/RO pushbutton to turn on the main relay inside the receiver.
4. Operate normally according to the function settings.
5. Please perform the following procedure when done operating
    a. Press STOP pushbutton
    b. Place the transmitter in safe storage location
6. Turn off the main power switch to the equipment

**5.2 Emergency Operation**

In case of any emergency please:

1. Press STOP pushbutton.
2. Switch off the main power of crane/machine. If the problem persists, contact your local distributor for service.

# 6.0 Basic Troubleshooting and Maintenance

**6.1 General Precautions**

Daily inspection is important and will ensure safe operation. Inspection should include testing the emergency stop and other safety devices and functions. If there is any doubt, operation must be stopped immediately and problems be corrected before operation is resumed.

**6.2 General LED Error Codes and Resolutions**

| | | |
|---|---|---|
| 1. | Transmitter LED flashes RED quickly (every 0.2 seconds) when any button is pressed: | One of the pushbuttons is jammed. |
| 2. | Transmitter LED flashes RED slowly (every 0.5 seconds): | The transmitter memory is defective. |
| 3. | Transmitter LED is steady RED when any button is pressed: | The transmitter batteries are low. |
| 4. | Receiver Error LED flashes slowly (every 0.5 seconds): | The receiver memory is defective. |

*Note: The receiver error LED is located on the inside of the receiver. Observe the appropriate precautions when opening the unit.*

**IF A PROBLEM IS FOUND, PLEASE CONTACT THE DISTRIBUTOR FOR REPAIR.**

**6.3 Change of Fuses**

Depress the fuse cover and turn counter-clockwise with a flat screwdriver to open up the fuse cover. Remove the old fuse and insert a new fuse into the cover. Place fuse cover along with the fuse into the fuse holder base. Depress the fuse cover and turn clockwise with flat screwdriver.

Legend: F= Fuse

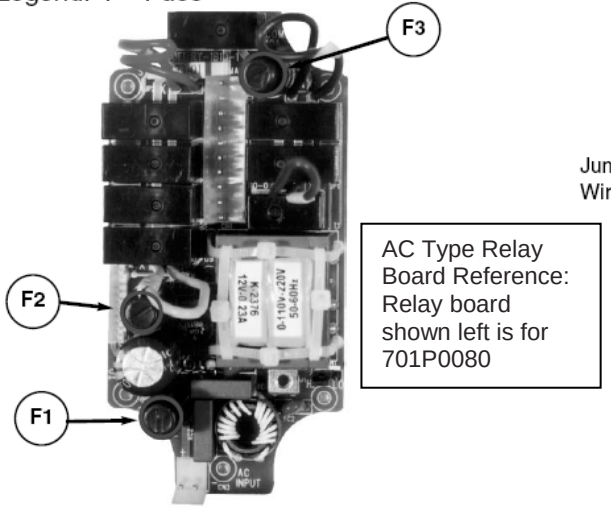


AC Type Relay Board Reference: Relay board shown left is for 701P0080

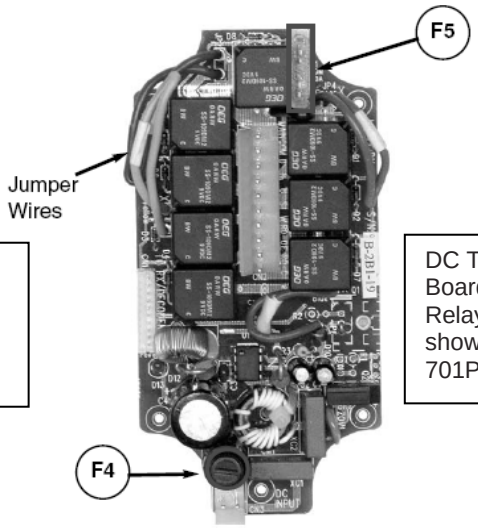


DC Type Relay Board Reference: Relay board shown left is for 701P0080-DC

### 6.3.1 Change of fuse, DC Type

Unplug the yellow fuse "F5" (20A) and replace with a new one

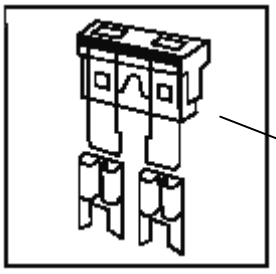

| Ref Fuse Number | Size | Fuse Type |
|---|---|---|
| F1 | .5A | 5 x 20 mm |
| F2 | .5A | 5 x 20 mm |
| F3 | 10A | 5 x 20 mm |
| F4 | 1.5A | 5 x 20 mm |
| F5 | 20A | Std Double spade |

### 6.4 Change of Frequency/Crystal

The frequency of the TeleChief® Series can be simply changed by replacing the correspondent crystal frequency in both the transmitter and receiver. Please refer to below procedure in regards to replacing the crystal.

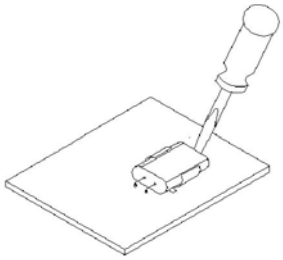

1. Gently pry up the crystal unit with a flat screwdriver

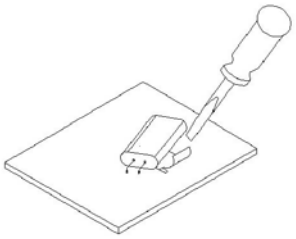

2. Remove the crystal unit from the system

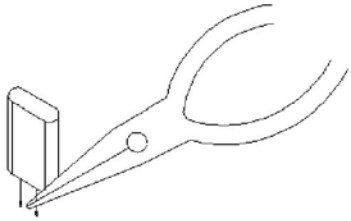

3. Use needle nose pliers to straighten both pins of the new crystal unit

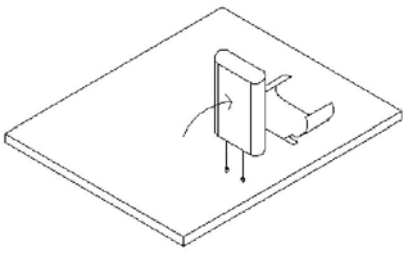

4. Insert the new crystal unit vertically into the PC board

5. Add dot of RTV to clip and press the new crystal down into the socket, bending the pins.

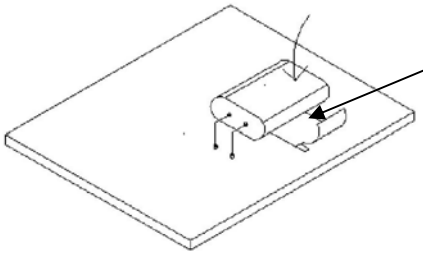


Attention: The frequency is different when plugging the same crystal into the transmitter or receiver.

For example:

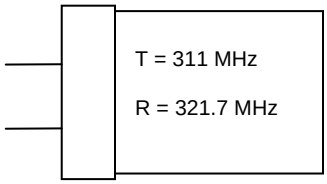


Frequency for transmitting is 311 MHz

Frequency for receiving is 321.7 MHz

Contact your distributor for different matched crystal sets.

# 7.0 Function Settings

The TeleChief® Series offers the following function settings in the transmitter:

Momentary
ON-OFF
Maintained
Interlocked

By default they are set in an interlocked momentary mode. TeleChief® Series radios can be custom programmed at the factory based on requirements and specific applications. Please contact your distributor for more information.

# 8.0 Specifications

**8.1 General**

| | |
|---|---|
| 1. Enclosure: IP65<br>2. Structure: Glass Fiber/Nylon<br>3. Operating Temperature: -45° ~ +80° C<br>-50° ~ +175° F<br>4. Relay: 10A/250VAC (AC Power);<br>15A/12VDC (DC Power) | 5. ID Code: 32 bit (Greater than 4 Billion Unique Codes<br>6. Hamming distance > 4 bits<br>7. Static > 15KV<br>8. Remote ID Code Setting<br>9. Operating range: up to 328 ft (100 meters) |

**8.2 Transmitter**

| | |
|---|---|
| 1. L x W x H: 4.72 x 2.17 x 1.00 in.<br>(120 x 55 x 25 mm)<br>2. Weight: 5.47 oz. (155g) (w/ batteries)<br>3. Uses 2 AA alkaline batteries<br>4. Low power indicator (LED flash red<br>5. Pushbutton jammed detector | 6. Shock resistance<br>7. Output power < 4mW<br>8. Normal power consumption : 10 mA<br>9. Sleep mode consumption : < 1 µA<br>10. Modulation: FM |

**8.3 Receiver**

| | |
|---|---|
| 1. L x W x H: 6.34 x 2.91 x 2.05<br>(161 x 74 x 52 mm)<br>2. Weight: 2.43 lbs. (1.1 kg) (without cable)<br>3. AC type: 48/110, 110/220, 220/380VAC<br>DC type: 12V~24VDC | 4. Sensitivity: approx. -105dBm<br>5. Shock resistant design<br>6. Four independent common lines (U/D, E/W, S/N,RO) |

# 9.0 Receiver Mounting Diagram

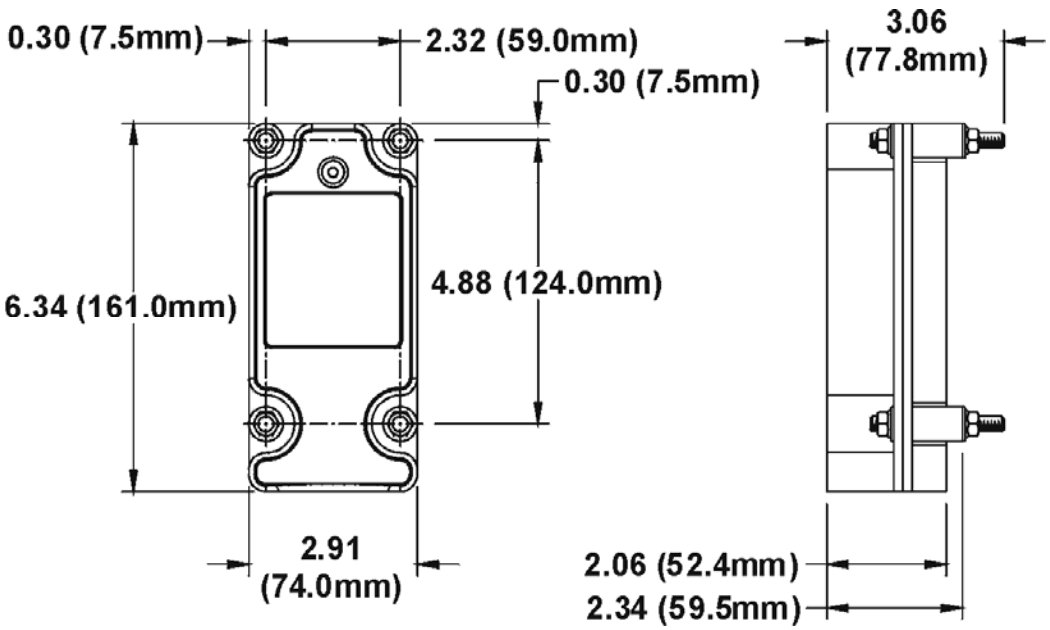


Installation Questions?

Technical assistance is available from Control Chief.

Please call us at 814-362-6811 or email the service department at prodserv@controlchief.com




**Control Chief Corporation**
**200 Williams Street**
**PO Box 141**
**Bradford, PA 16701**
**814-362-6811 * 1-800-233-3016 * 814-368-4133 (fax)**
**www.controlchief.com**

CONTROL CHIEF®

WIRELESS SOLUTIONS

# TeleChief® Series TM2000 / TM4000 / TM6000

## Owners Manual

Failure to return the Warranty Registration document (enclosed) to Control Chief within 30 days of purchase will void any warranty responsibilities on behalf of Control Chief Corporation

**Control Chief Corporation**
**200 Williams Street Bradford, PA 16701**
**814-362-6811 * 1-800-233-3016 * 814-368-4133 (fax)**
**www.controlchief.com**

95-00-0-036

Control Chief Corporation, a world leader in wireless radio and infrared remote control products has developed and expanded upon this powerful technology. More than three decades of experience in designing, manufacturing and installing state-of-the-art remote communication systems emphasize Control Chief's mission.

Our systems are tailored to virtually any environment or application. Control Chief provides training, technical support, and comprehensive system design to maximize performance. It is our honor to uphold this reputation of innovative engineering and superior product performance.







Publication: 95-00-0-036 Rev D
Copyright © 2002, 2003, 2007 Control Chief Corporation
All Rights Reserved.

200 Williams Street, Bradford, Pennsylvania, 16701
Web Page: www.controlchief.com
Telephone: (814) 362-6811, FAX: (814) 368-4133

**1.0 Radio Warranty**
- 1.1 Warranty
- 1.2 Warranty Period
- 1.3 Warranty Service
- 1.4 Excluded Parts
- 1.5 Remarks

**2.0 Safety**
- 2.1 Safety Considerations
- 2.2 Symbols
- 2.3 Warnings

**3.0 Standard Components**
- 3.1 Receiver (RX)
- 3.2 Transmitter (TX)
- 3.3 Accessories per Radio Transmitter

**4.0 Installation Procedure**
- 4.1 General Precautions
- 4.2 Receiver Preparation
  - 4.2.1 Power Supply Selection
  - 4.2.2 Open / Closed Setup
- 4.3 Receiver Installation
  - 4.3.1 Radio Schematics
- 4.4 Remote Setting
- 4.5 Transmitter Setup

**5.0 Operation**
- 5.1 Standard Operation
- 5.2 Emergency Shutdown Procedure

**6.0 Basic Troubleshooting and Maintenance**
- 6.1 General Precautions
- 6.2 General Error Code and Resolutions
- 6.3 Change of Fuse
  - 6.3.1 DC Type
- 6.4 Change of Frequency / Crystal

**7.0 Function Settings**

**8.0 Specifications**
- 8.1 General
- 8.2 Transmitter
- 8.3 Receiver

**9.0 Receiver Mounting Diagram**

# 1.0 Radio Warranty

**1.1 Warranty.** Control Chief Corporation guarantees that this equipment meets its published specifications at the time of shipment from the factory. This equipment will perform as described if installed properly. However, Control Chief cannot guarantee that operation of remote control system is absolutely error-free, or without interruption.

**1.2 Warranty Period.** This equipment is warranted against defects in materials and workmanship for a period of one (1 year from the date of shipment. During the warranty period, Control Chief is responsible for necessary repairs/replacement as long as the product can be proven defective.

**1.3 Warranty Service.** For warranty service or repair, this equipment must be returned to Control Chief Corporation. Customer is responsible for shipping charges to Control Chief. Control Chief's warranty covers only parts and factory labor. No onsite in and out charges are covered under this warranty.

**1.4 Excluded Parts.** This warranty does not include consumable parts such as joysticks, batteries, fuses, buttons, and relays. Also, this warranty does not cover defects caused by improper installation, improper/insufficient maintenance, unauthorized modification, improper operation, ignorance of environmental specifications, and/or improper software/interfacing.

**1.5 Remarks.** No other warranty is expressed or implied, except for the above mentioned. The remedies provided herein are the buyers' sole and exclusive remedies. Control Chief shall not be liable for any direct/indirect, special, incidental, or consequential damage. Consult Control Chief's general warranty for further information.

# 2.0 Safety

**2.1 Safety Considerations**

1. The safety guidelines in this manual are not intended to replace any rules or regulations or any applicable local, state, or federal governing laws. The following information is intended to be used in conjunction with other rules or regulations already in existence. It is important to read all safety information before operating any wireless radio remote control system.

2. Only properly trained persons designated by management should be permitted to operate wireless radio controlled equipment. Wireless radio controlled equipment should not be operated by any person who cannot read or understand signs, notices and operating instructions that pertain to the equipment.

3. Wireless radio controlled equipment should not be operated by any person with insufficient eyesight or hearing or by any person who may be suffering from a disorder or illness or is taking any medication that may impair judgment or the ability to operate equipment.

4. Do not use this device during electrical storms or under conditions of electrical interference, due to the potential for equipment communication issues. Ensure transmitter batteries are in good condition and power for receiver is correct. Installation and maintenance should be done only while the controlled equipment main power and receiver's power are off and locked out to prevent electrical shock.

5. Any person operating wireless radio controlled equipment should possess the following knowledge and/or skills:

- Knowledge of hazards peculiar to equipment operation
- Knowledge of safety rules for radio controlled equipment
- Knowledge of standard methods of hand and/or non-verbal signaling
- Knowledge of the radio transmitter
- Limit switch test procedure
- Proper clearance of all moving parts on the radio controlled equipment
- Proper storage space for radio control transmitter when not in use
- Transferring radio control transmitter to another person
- Reporting unsafe or unusual operating conditions
- Remote controlled equipment capacity and limitations
- Procedures for testing controlled equipment

6. Aisles between equipment, stock, etc., should be free of obstructions so the radio control operator can move freely. These aisles should meet local regulations.

7. Radio controlled operators should always position themselves for the best view of the equipment they are controlling. The equipment should never be operated blindly. The operator should always remain at a safe distance, without losing line of sight with the equipment.

8. Transmitter switches should never be mechanically blocked ON or OFF for any equipment motion. When not in use turn the transmitter off (STOP).

9. After daily operation, shut off main power in crane/machine and the power to the receiver. A secure storage space should be designated for the transmitter unit especially when not in use. This precaution is intended to prevent unauthorized use of the equipment.

10. The equipment operator should keep all body parts away from any moving parts and should never be positioned under a lifted load. Do not make a lift or move a load if anyone is in a location where they could be struck by the crane/equipment or the load.

11. If the equipment fails to respond properly, the crane/equipment operator should stop operation, turn the transmitter off (STOP). The operator should immediately report the condition to his/her supervisor.

12. The crane/equipment operator should turn off the transmitter and take it with him/her when and if boarding the equipment.
13. Remote control operation should NEVER be used for "people moving" applications. Never use remote operation if there are people aboard the controlled equipment. The remote control operator should NEVER "ride" on the controlled equipment.

**WARNING**
ALWAYS PLACE CRANE/EQUIPMENT IN MANUAL OPERATION AND SECURE THE WIRELESS REMOTE CONTROL TRANSMITTER PRIOR TO PERFORMING ANY MAINTENANCE.

14. The equipment has been tested for correct operation before delivery from the factory. However, it must not be used in critical or hazardous operation where incorrect operation may cause personal or equipment damage. If the equipment fails to respond or behaves improperly, the equipment operator should NOT operate the equipment AND should notify his/her supervisor immediately. When serious conditions are noticed (conditions that make the crane/equipment unsafe to operate), the equipment should be shut down immediately and the supervisor notified.

**CAUTION**
THE RECEIVER UNIT OR RELAYS ARE NOT RATED AS EXPLOSION PROOF. THE RECEIVER UNIT MUST NOT BE INSTALLED OR OPERATED IN EXPLOSIVE ENVIRONMENTS UNLESS APPROPRIATE SECONDARY ENCLOSURE MEASURES ARE TAKEN.

**WARNING**
THE UNIT MUST BE WIRED TO THE CORRECT VOLTAGE; FAILURE TO DO SO MAY DAMAGE THE SYSTEM.

**NOTE**
IN AN EMERGENCY, PUSH "STOP" TO STOP RADIO REMOTE CONTROLLED EQUIPMENT.

## 2.2 Symbols

1. This product and related documentation must be reviewed for familiarization with safety markings and instructions before operation. This product requires strict adherence to instructions in order to ensure operational safety. The following symbols may be found on the remote control or throughout the remote control documentation. Their purpose is to alert you to potentially dangerous situations.



**Refer To Manual**
When the product is marked with this symbol refer to the instruction manual for additional information.



**High Voltage**
Indicates presence of hazardous voltage. Unsafe practice could result in severe personal injury.



**Protective Earth Ground**
Indicates protective earth terminal.



**Warning**
Denotes hazard. Included text will give proper instructions. Failure to follow instructions could result in severe personal injury and/or property damage.



**Caution**
Denotes hazard. Included text will give proper instructions. Failure to follow instructions could result in minor personal injury and/or property damage.

## 2.3 Warnings



1. Read this manual carefully before operating and installing this product.
2. Due to the complex nature of equipment, it is necessary to read the entire manual before installation.
3. Only authorized personnel should service this equipment. Unauthorized work on this unit will void the warranty.
4. This manual is for reference only; please call your distributor or Control Chief if further assistance is required.



5. The equipment has been tested for correct operation before delivery from the factory. However, it must not be used in critical or hazardous operation where incorrect operation may cause personal or equipment damage.
6. After daily operation, please shut off main power in crane/machine and the power to the receiver.
7. Transmitter should be placed in a safe place when not in use to avoid accidental pressing of buttons.
8. The crane/machine should be equipped with mainline contactor, limit switches, and other required safety devices as dictated by CMAA, OSHA, or all other applicable governing regulations.



9. The GND (ground) of receiver must be connected to ground of crane/machine, or electrical shock can occur.
10. Do not use this device during electrical storms or under conditions of electrical interference.
11. Ensure transmitter batteries are in good condition and power for receiver is correct.



12. Installation and maintenance should be done only while the crane/machine's main power and receiver's power are off and locked out to prevent electrical shock.
13. Contents of the manual may be amended by the manufacturer without notice.

# 3.0 Standard Components

A standard TeleChief® wireless pendant system consists of a single (1) receiver and one (1) or two (2) handheld transmitters. AC and DC input voltage receivers are available. See paragraph 4.2.1 for available variants.

*Note: All replacement part orders require the System Serial Number and the Channel Number for proper frequency matching.*

### 3.1 Receivers




TM2000 AC Receiver, Part Number = 701P0040
TM2000 DC Receiver, Part Number = 701P0040-DC

TM4000 AC Receiver, Part Number = 701P0060
TM4000 DC Receiver, Part Number = 701P0060-DC

TM6000 AC Receiver, Part Number = 701P0080 (shown)
TM6000 DC Receiver, Part Number = 701P0080-DC

### 3.2 Transmitters



TM2000 Transmitter, Part Number = 701P0004



TM4000 Transmitter, Part Number = 701P0006



TM6000 Transmitter, Part Number = 701P0008

### 3.3 Accessories Per Radio Transmitter

1. Alkaline batteries (2 pieces)
2. Strap for transmitter (1 piece)
3. Owners manual (Part number 95-00-0-036)

# 4.0 Installation Procedure

**4.1 General Precautions**

1. Observe all safety precautions when climbing or working on the machine.
2. Turn off the main power source of crane/machines before installation to avoid electric shock. Lockout/Tagout the main power source.
3. Receiver must be installed as to not touch any part of the crane/machine or structure during the operation, except for mounting provisions.
4. The receiver must be fastened securely via shock-proof mount provided.
5. Before installation, inspect the crane/machine's safety devices and make sure everything is in proper working condition.
6. To avoid any interference, the receiver must be located away from motors, frequency drives, and power cables (Section 4.3).
7. **Coil suppressors are recommended on all contactor coils and relay coils. Control Chief recommends RC type suppressors (Control Chief part number 0700-8002).**
8. In outdoor applications make sure all case fasteners are tightened firmly. The recommended torque setting is 35-40 inch-pounds. Make sure cord grip is secure. If the receiver is mounted with the antenna facing sideways or upwards, wiring pigtail must be positioned with a drip loop. See illustration for preferred mounting.

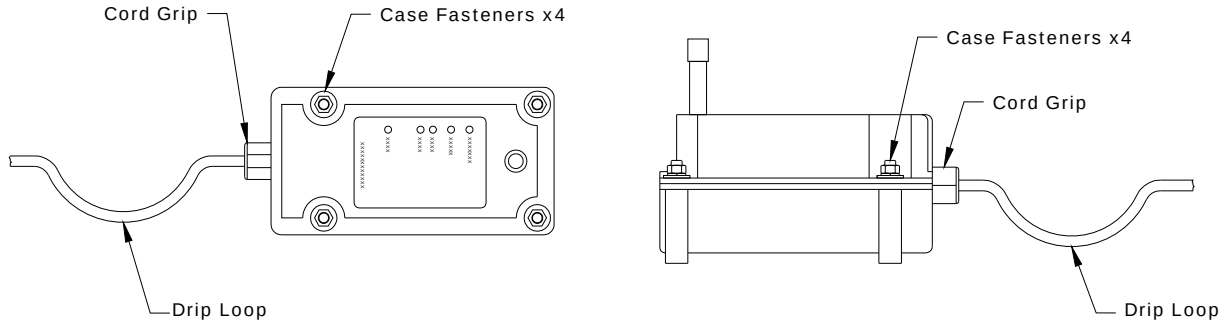


**4.2 Receiver Preparation**

**4.2.1 Power Supply Selection**

There are two types of power voltage (DC and AC) available for the TeleChief® Series:

DC Type

Input voltage: 12~24VDC. Wire + DC to Power 1 (black) and DC - to Power 2 (white).
Relay Contact: 15A-32VDC

AC Type (3 different transformers: 48/110V, 110/220V, 220/380V)

The voltage selection jumper is:

| | LOW | HI |
|---|---|---|
| 1. AC 48 / 110 V Transformer | 48V | 110V |
| 2. AC 110 / 220 V Transformer | 110V | 220V |
| 3. AC 220 / 380 V Transformer | 220V | 380V |

1. Locate the Hi/Low jumper to the lower left of the transformer.
2. Place the jumper connecting the two pins to enable the correct transformer setting as shown in the chart above.

*Note: The default transformer is the 48V/110V version and jumper is normally set on Hi. Please contact your distributor for other options and lead-times.*

### 4.2.2 Normally Open / Normally Closed Setup

The TeleChief® Series provides 2 different outputs for the R0/START relay: N.O. and N.C. The N.O. is the default setting. If an N.C. output is necessary, please remove the No. 8 wire (RO/Start) from the connector and insert it into No. 10 as shown in steps 1 through 4 below:

NC Procedure:

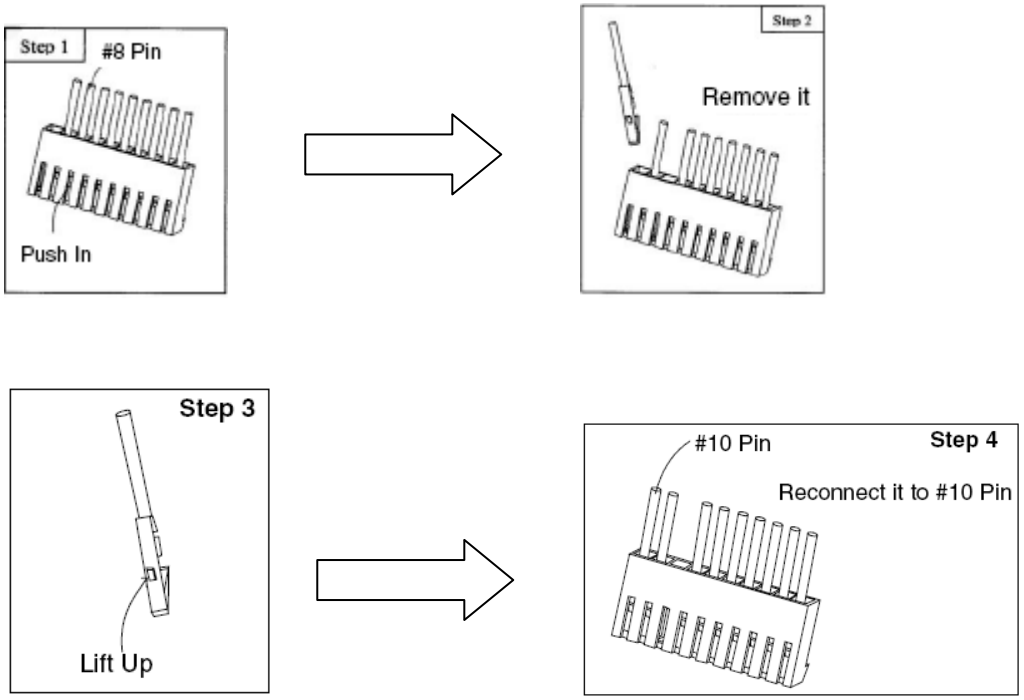


### 4.3 Receiver Installation

1. Turn off main power to the crane/machine.
2. Locate a proper place for the receiver.
   a. Select a stable place free from electrical noise, vibration, excessive heat, etc.
   b. Select a location that is visible from the operator's location.
   c. Select a location at least 3 feet away from motors, relays, power cables, and frequency converters.
   d. Keep away from high voltage wiring and devices.
   e. The receiver box must be at least 1.5" (4cm) from other obstacles.
3. Drill four (4) 6 mm holes for the receiver mounting the unit with the included hardware.
4. Connect wires to the control circuit of the crane/machine according to the wiring diagram of the receiver. (Shown in Section 4.3.1)

TeleChief® Series Receiver

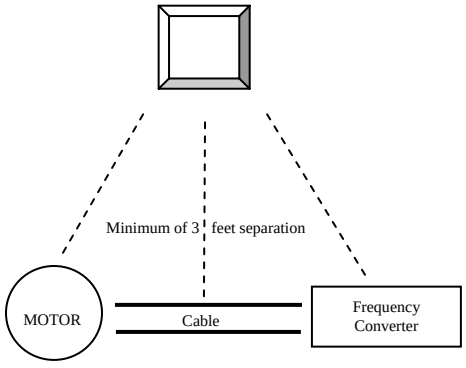


5. Secure the cable between the receiver and the machine so that the cable sheath will not wear out due to vibration.
6. Complete Section 4.5 and test every function of the radio control making sure all motors are correct.
7. Secure the cover making sure not to pinch any wires between the case and the lid.
8. This completes the receiver installation.

### 4.3.1 Radio Schematics

**AC Models**

TM2000

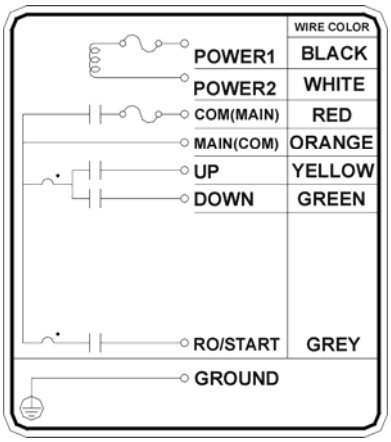


4-button wiring schematic

TM4000

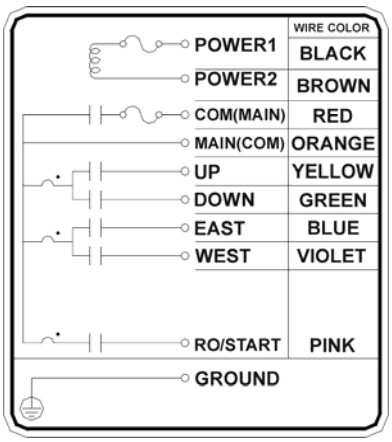


6-button wiring schematic

TM6000

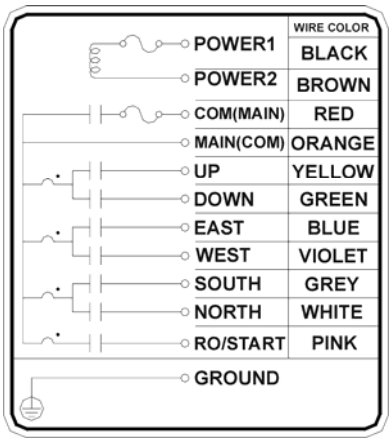


8-button wiring schematic

**DC Models**

TM2000

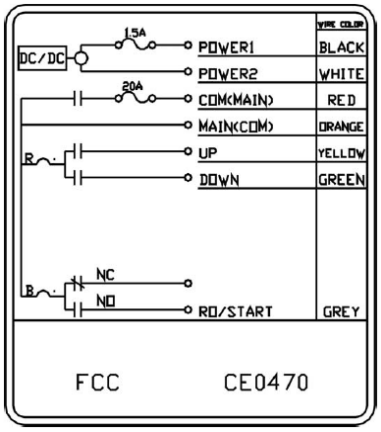


4-button wiring schematic

TM4000

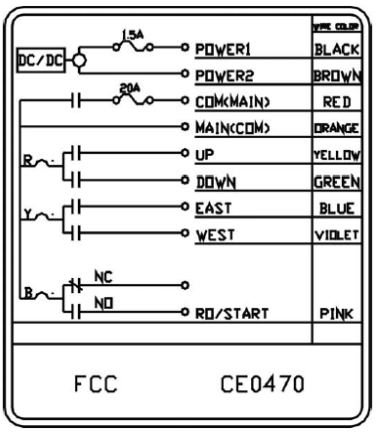


6-button wiring schematic

TM6000

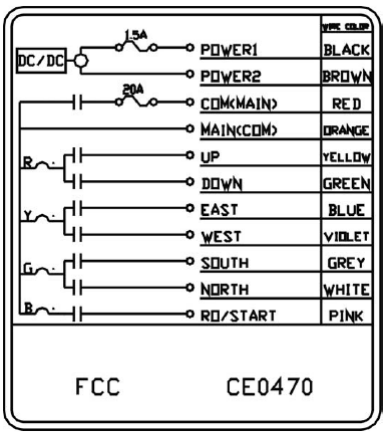


8-button wiring schematic

**4.4 Remote Setting**

Remote setting allows you to pair the new transmitter and receiver if either of them becomes damaged. In order for the radios to work the transmitter and receiver must have the same ID codes and frequency. Using remote setting will set both the transmitter and receiver to have the same ID codes.

1. Please ensure the following conditions are met before attempting the remote setting procedure.
   a. Both the transmitter and receiver are of the SAME model and frequency.
   b. To place the transmitter as close as possible to the receiver to avoid any interference.
   c. Turn off the receiver power and turn it on again.
   d. Complete the "remote setting" within 4 minutes after turning on the receiver. The receiver will NOT accept the remote setting signal after 4 minutes has elapsed.
2. Remote Setting instructions
   a. Press and hold the transmitter STOP pushbutton.
   b. Press the DOWN pushbutton and hold it.
   c. Press the UP pushbutton 4 times and release "STOP & DOWN" pushbuttons when the red light flashes.
   d. Start the system per General Operation (Section 5.0).




ATTENTION:
* In case the remote setting procedure fails, repeat the instructions above within 4 minutes.
* The remote setting procedure will update the ID code only. It will not change function settings.
* All same model systems within the operating distance on the same frequency will be paired with the transmitter's ID code.

**4.5 Transmitter Setup**

Two (2) AA size alkaline batteries are required for the transmitter. The LED will flash GREEN when the battery power is sufficient. The LED will flash RED when the battery power is low.

*Note 1: The operating distance will decrease when the batteries are low.*

*Note 2: Replace with new batteries when battery power is low.*

*Note 3: Re-chargeable batteries are NOT recommended, use only alkaline batteries*.

# 5.0 Operation

**5.1 Standard Operation**

1. Turn-on the main power switch of the equipment.
2. Install two (2) AA size alkaline batteries in the transmitter.
3. Press the Start/RO pushbutton to turn on the main relay inside the receiver.
4. Operate normally according to the function settings.
5. Please perform the following procedure when done operating
    a. Press STOP pushbutton
    b. Place the transmitter in safe storage location
6. Turn off the main power switch to the equipment

**5.2 Emergency Operation**

In case of any emergency please:

1. Press STOP pushbutton.
2. Switch off the main power of crane/machine. If the problem persists, contact your local distributor for service.

# 6.0 Basic Troubleshooting and Maintenance

**6.1 General Precautions**

Daily inspection is important and will ensure safe operation. Inspection should include testing the emergency stop and other safety devices and functions. If there is any doubt, operation must be stopped immediately and problems be corrected before operation is resumed.

**6.2 General LED Error Codes and Resolutions**

| | | |
|---|---|---|
| 1. | Transmitter LED flashes RED quickly (every 0.2 seconds) when any button is pressed: | One of the pushbuttons is jammed. |
| 2. | Transmitter LED flashes RED slowly (every 0.5 seconds): | The transmitter memory is defective. |
| 3. | Transmitter LED is steady RED when any button is pressed: | The transmitter batteries are low. |
| 4. | Receiver Error LED flashes slowly (every 0.5 seconds): | The receiver memory is defective. |

*Note: The receiver error LED is located on the inside of the receiver. Observe the appropriate precautions when opening the unit.*

**IF A PROBLEM IS FOUND, PLEASE CONTACT THE DISTRIBUTOR FOR REPAIR.**

**6.3 Change of Fuses**

Depress the fuse cover and turn counter-clockwise with a flat screwdriver to open up the fuse cover. Remove the old fuse and insert a new fuse into the cover. Place fuse cover along with the fuse into the fuse holder base. Depress the fuse cover and turn clockwise with flat screwdriver.

Legend: F= Fuse

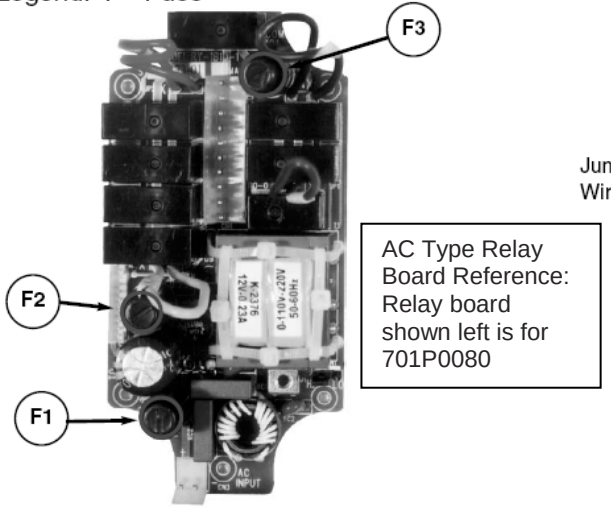


AC Type Relay Board Reference: Relay board shown left is for 701P0080

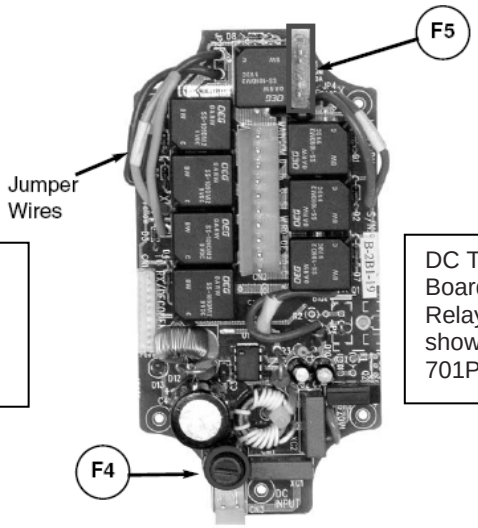


DC Type Relay Board Reference: Relay board shown left is for 701P0080-DC

### 6.3.1 Change of fuse, DC Type

Unplug the yellow fuse "F5" (20A) and replace with a new one

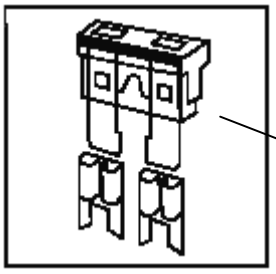

| Ref Fuse Number | Size | Fuse Type |
|---|---|---|
| F1 | .5A | 5 x 20 mm |
| F2 | .5A | 5 x 20 mm |
| F3 | 10A | 5 x 20 mm |
| F4 | 1.5A | 5 x 20 mm |
| F5 | 20A | Std Double spade |

### 6.4 Change of Frequency/Crystal

The frequency of the TeleChief® Series can be simply changed by replacing the correspondent crystal frequency in both the transmitter and receiver. Please refer to below procedure in regards to replacing the crystal.

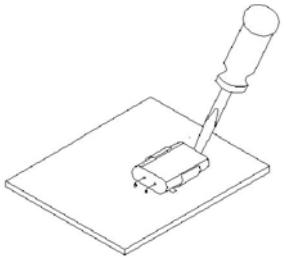

1. Gently pry up the crystal unit with a flat screwdriver

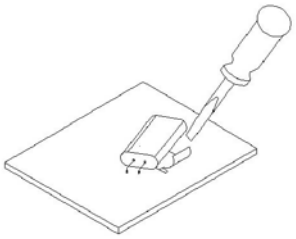

2. Remove the crystal unit from the system

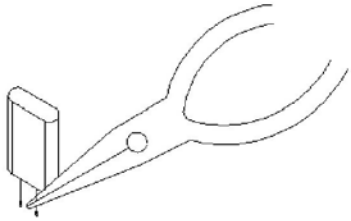

3. Use needle nose pliers to straighten both pins of the new crystal unit

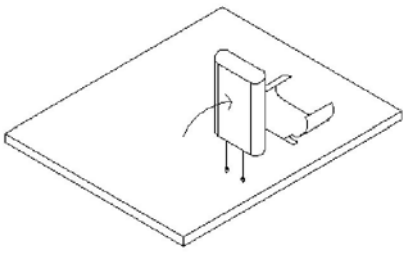

4. Insert the new crystal unit vertically into the PC board

5. Add dot of RTV to clip and press the new crystal down into the socket, bending the pins.

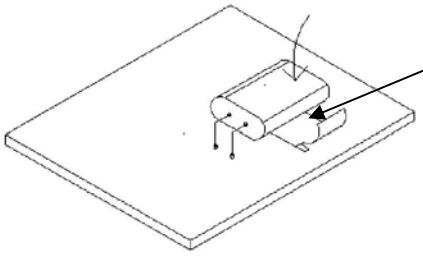


Attention: The frequency is different when plugging the same crystal into the transmitter or receiver.

For example:

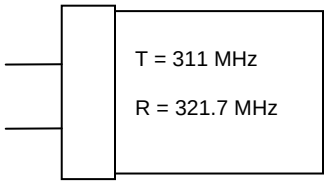


Frequency for transmitting is 311 MHz

Frequency for receiving is 321.7 MHz

Contact your distributor for different matched crystal sets.

# 7.0 Function Settings

The TeleChief® Series offers the following function settings in the transmitter:

Momentary
ON-OFF
Maintained
Interlocked

By default they are set in an interlocked momentary mode. TeleChief® Series radios can be custom programmed at the factory based on requirements and specific applications. Please contact your distributor for more information.

# 8.0 Specifications

**8.1 General**

| | |
|---|---|
| 1. Enclosure: IP65<br>2. Structure: Glass Fiber/Nylon<br>3. Operating Temperature: -45° ~ +80° C<br>-50° ~ +175° F<br>4. Relay: 10A/250VAC (AC Power);<br>15A/12VDC (DC Power) | 5. ID Code: 32 bit (Greater than 4 Billion Unique Codes<br>6. Hamming distance > 4 bits<br>7. Static > 15KV<br>8. Remote ID Code Setting<br>9. Operating range: up to 328 ft (100 meters) |

**8.2 Transmitter**

| | |
|---|---|
| 1. L x W x H: 4.72 x 2.17 x 1.00 in.<br>(120 x 55 x 25 mm)<br>2. Weight: 5.47 oz. (155g) (w/ batteries)<br>3. Uses 2 AA alkaline batteries<br>4. Low power indicator (LED flash red<br>5. Pushbutton jammed detector | 6. Shock resistance<br>7. Output power < 4mW<br>8. Normal power consumption : 10 mA<br>9. Sleep mode consumption : < 1 µA<br>10. Modulation: FM |

**8.3 Receiver**

| | |
|---|---|
| 1. L x W x H: 6.34 x 2.91 x 2.05<br>(161 x 74 x 52 mm)<br>2. Weight: 2.43 lbs. (1.1 kg) (without cable)<br>3. AC type: 48/110, 110/220, 220/380VAC<br>DC type: 12V~24VDC | 4. Sensitivity: approx. -105dBm<br>5. Shock resistant design<br>6. Four independent common lines (U/D, E/W, S/N,RO) |

# 9.0 Receiver Mounting Diagram

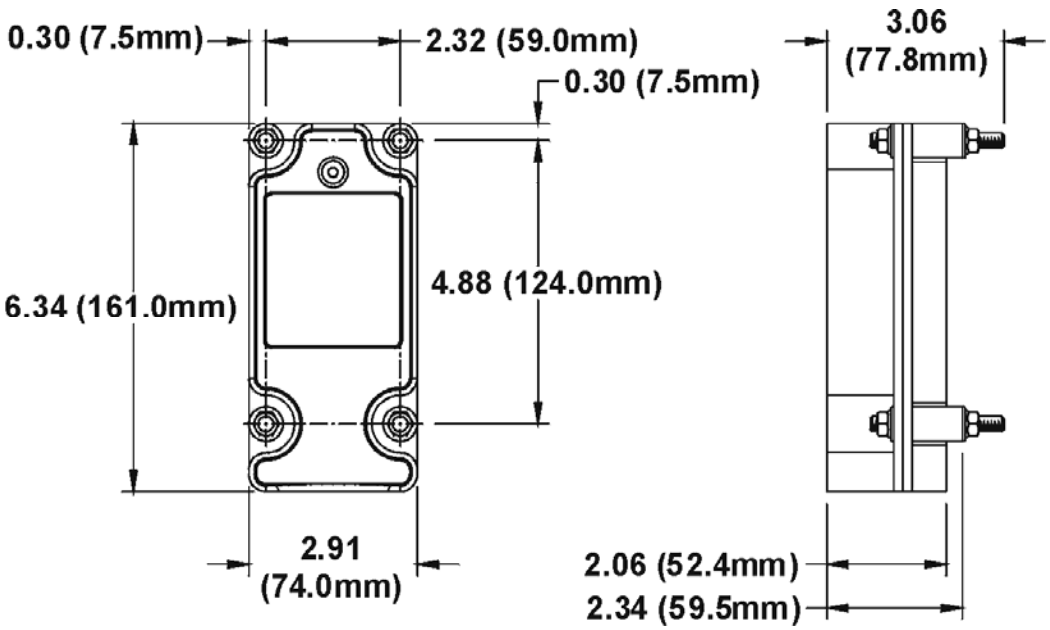


Installation Questions?

Technical assistance is available from Control Chief.

Please call us at 814-362-6811 or email the service department at prodserv@controlchief.com




**Control Chief Corporation**
**200 Williams Street**
**PO Box 141**
**Bradford, PA 16701**
**814-362-6811 * 1-800-233-3016 * 814-368-4133 (fax)**
**www.controlchief.com**

# SECTION 9
# HYDRAULICS

US FURNACES, LLC MAX 4000

# Cylinder Parts List

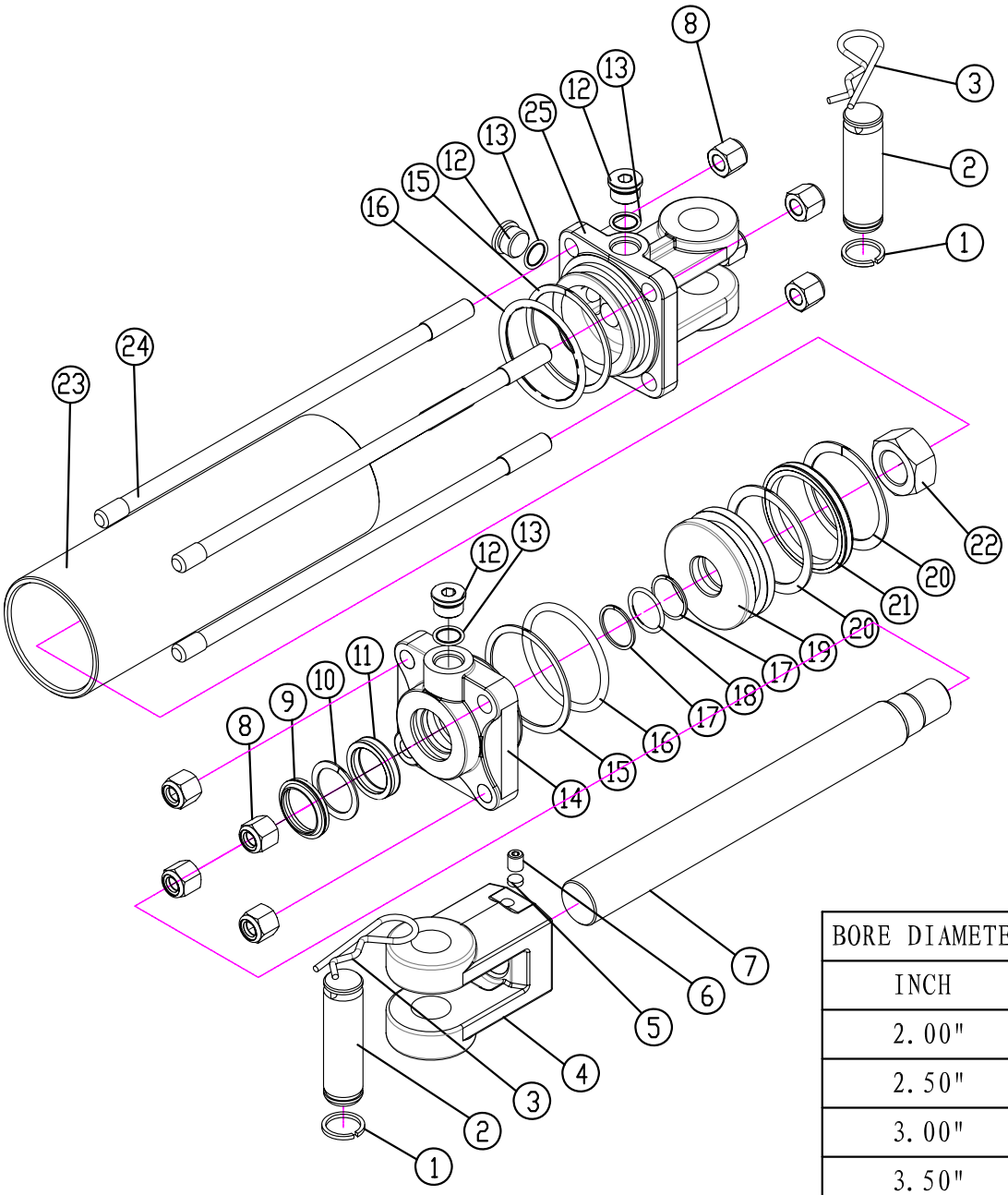


| BORE DIAMETER | PISTON NUT TORQUE |
|---|---|
| INCH | FT-LBS (N.M) |
| 2.00" | 158(215) |
| 2.50" | 158(215) |
| 3.00" | 316(430) |
| 3.50" | 463(630) |
| 4.00" | 463(630) |
| 5.00" | 1131(1539) |

| No. | PART DESCRIPTION | QTY | No. | PART DESCRIPTION | QTY | No. | PART DESCRIPTION | QTY |
|---|---|---|---|---|---|---|---|---|
| 1 | C-RING | 2 | 10 | BACK-UP RING | 1 | 19 | PISTON | 1 |
| 2 | ACTIVE PIN | 2 | 11 | U-CUP SEAL | 1 | 20 | BACK-UP RING | 1 |
| 3 | "R"RETAINED PIN | 2 | 12 | STEEL PIPE PLUG | 3 | 21 | SEAL SET | 1 |
| 4 | ROD CLEVIS | 1 | 13 | O-RING | 3 | 22 | PISTON NUT | 1 |
| 5 | WASHER | 1 | 14 | TOP CAP | 1 | 23 | CYLINDER TUBING | 1 |
| 6 | SET SCREW | 1 | 15 | BACK-UP RING | 2 | 24 | TIE ROD | 4 |
| 7 | PISTON ROD | 1 | 16 | O-RING | 2 | 25 | BASE CLEVIS | 1 |
| 8 | TIE ROD NUT | 8 | 17 | BACK-UP RING | 2 | | | |
| 9 | ROD WIPER SEAL | 1 | 18 | O-RING | 1 | | | |

## PUMPS

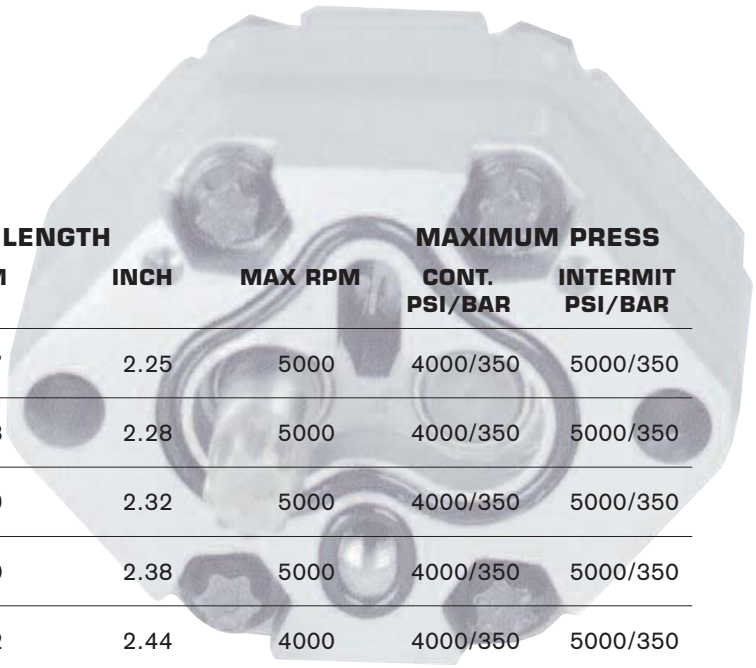

| KIT NUMBER | DISPLACEMENT CC REV | DISPLACEMENT CIPR | LENGTH MM | LENGTH INCH | MAX RPM | MAXIMUM PRESS CONT. PSI/BAR | MAXIMUM PRESS INTERMIT PSI/BAR |
|---|---|---|---|---|---|---|---|
| **KP08** | 0.8 | 0.049 | 57 | 2.25 | 5000 | 4000/350 | 5000/350 |
| **KP10** | 1.0 | 0.061 | 58 | 2.28 | 5000 | 4000/350 | 5000/350 |
| **KP12** | 1.2 | 0.073 | 59 | 2.32 | 5000 | 4000/350 | 5000/350 |
| **KP16** | 1.6 | 0.098 | 60 | 2.38 | 5000 | 4000/350 | 5000/350 |
| **KP20** | 2.0 | 0.122 | 62 | 2.44 | 4000 | 4000/350 | 5000/350 |
| **KP25** | 2.5 | 0.153 | 64 | 2.52 | 4000 | 4000/350 | 5000/350 |
| **KP31** | 3.1 | 0.189 | 67 | 2.62 | 4000 | 3600/250 | 5000/350 |
| **KP40** | 4.0 | 0.244 | 70 | 2.75 | 4000 | 3000/200 | 4000/280 |
| **KP50** | 5.0 | 0.305 | 74 | 2.90 | 4000 | 2300/160 | 3200/220 |
| **KP63** | 6.3 | 0.384 | 79 | 3.11 | 3200 | 1800/125 | 2500/175 |
| **KP80** | 8.0 | 0.488 | 86 | 3.37 | 2400 | 1500/100 | 2000/140 |

Kit includes washers and mounting bolts. Use all washers. Mounting bolts are grade 5.
**DO NOT SUBSTITUTE.** KP10 cannot be used in duplex pump applications.

## ENDHEADS

| KIT NUMBER | DESCRIPTION |
|---|---|
| **KN09** | ENDHEAD METRIC FOOTMOUNTS SAE PORTS |
| **KN10** | ENDHEAD METRIC FOOTMOUNTS BSPP PORTS |
| **KN11** | ENDHEAD UNC FOOTMOUNTS NPT PORTS |
| **KN12** | ENDHEAD UNC FOOTMOUNTS SAE PORTS |

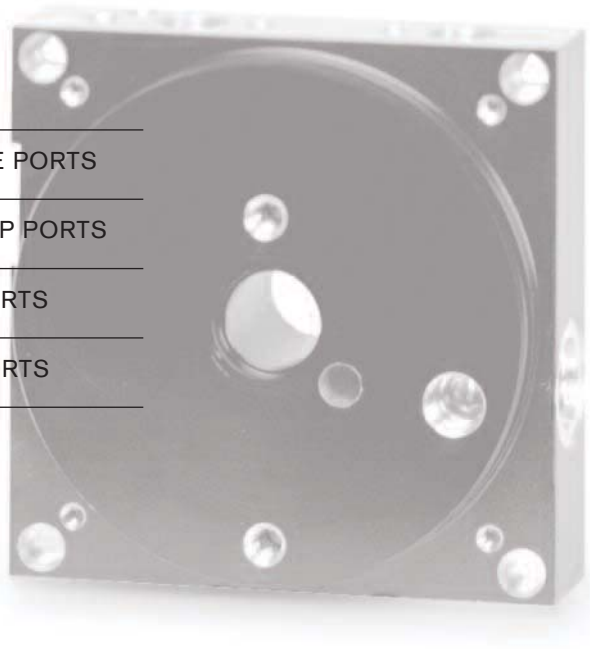

# PUMP KITS
# AFC SERIES

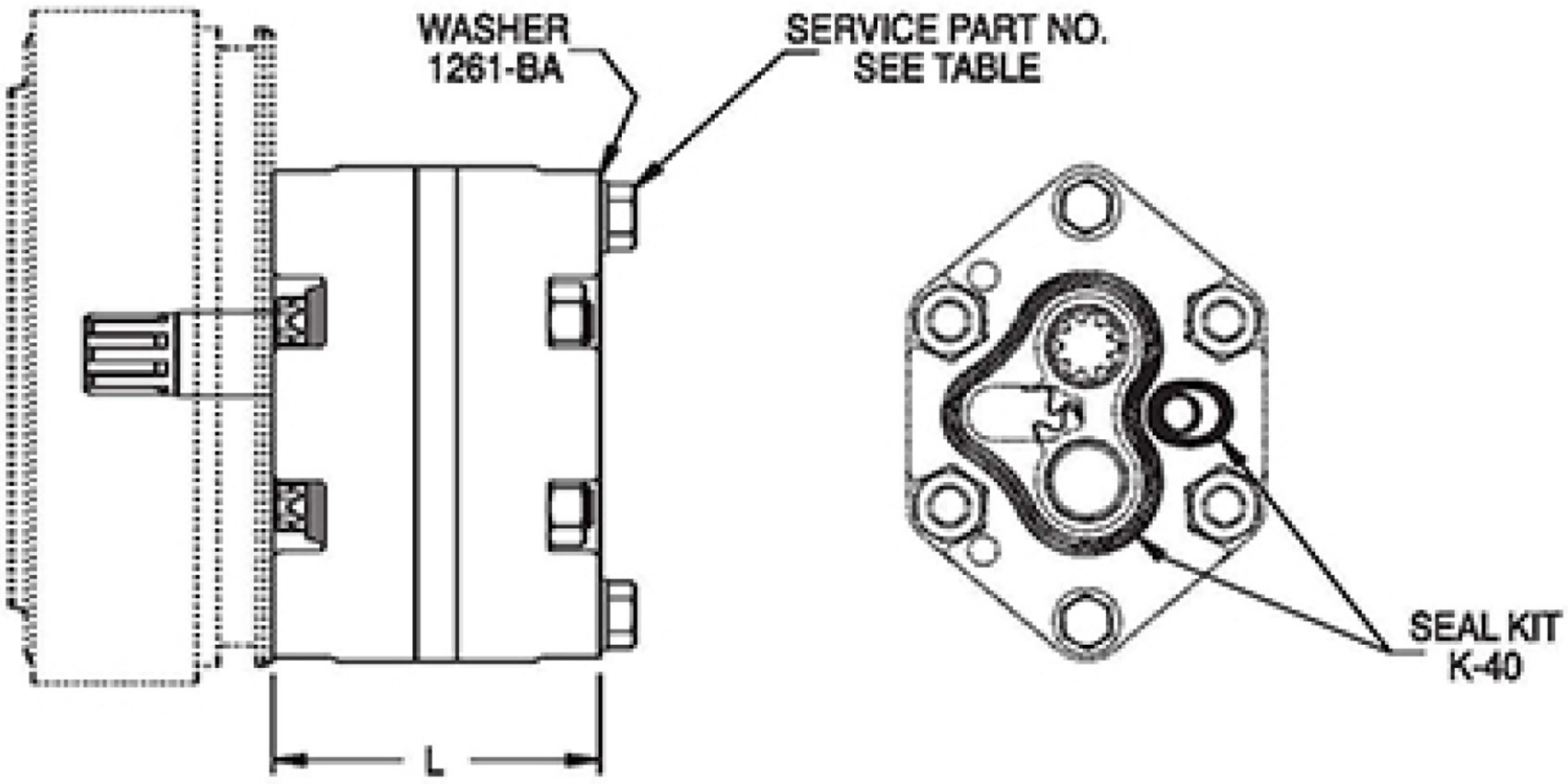


Current Endhead Design Uses 5/16-24 Mounting Thread. Older Endhead Design Used M8 Mounting Thread. Pump Kits Include Both Imperial And Metric Mounting Bolts.

| KIT NO. | DISPLACEMENT CC REV | DISPLACEMENT CIPR | LENGTH MM | LENGTH INCH | MAX. RPM | MAXIMUM PRESS CONT. PSI / BAR | MAXIMUM PRESS INTERMIT. PSI/BAR | INCLUDED IN KIT KP__ SERVICE BOLT PART NO. | INCLUDED IN KIT KP__ SERVICE BOLT PART NO. |
|---|---|---|---|---|---|---|---|---|---|
| KP08 | 0.8 | 0.049 | 57 | 2.25 | 5000 | 3600/250 | 4000/280 | 2824-AA METRIC | F1-1052-75 IMPERIAL |
| KP10 | 1.0 | 0.061 | 58 | 2.28 | 5000 | 3600/250 | 4000/280 | 2824-AA METRIC | F1-1052-75 IMPERIAL |
| KP12 | 1.2 | 0.073 | 59 | 2.32 | 5000 | 3600/250 | 4000/280 | 2825-AA METRIC | F1-1052-75 IMPERIAL |
| KP16 | 1.6 | 0.098 | 60 | 2.38 | 5000 | 3600/250 | 4000/280 | 2825-AA METRIC | F1-1052-75 IMPERIAL |
| KP20 | 2.0 | 0.122 | 62 | 2.44 | 4000 | 3600/250 | 4000/280 | 2825-AA METRIC | F1-1053-00 IMPERIAL |
| KP25 | 2.5 | 0.153 | 64 | 2.52 | 4000 | 3600/250 | 4000/280 | 2826-AA METRIC | F1-1053-00 IMPERIAL |
| KP31 | 3.1 | 0.189 | 67 | 2.62 | 4000 | 3600/250 | 4000/280 | 2826-AA METRIC | F1-1053-00 IMPERIAL |
| KP40 | 4.0 | 0.244 | 70 | 2.75 | 4000 | 3000/200 | 4000/280 | 2826-AA METRIC | F1-1053-25 IMPERIAL |
| KP50 | 5.0 | 0.305 | 74 | 2.90 | 4000 | 2300/160 | 3200/220 | 2827-AA METRIC | F1-1053-50 IMPERIAL |
| KP63 | 6.3 | 0.384 | 79 | 3.11 | 3200 | 1800/125 | 2500/175 | 2827-AA METRIC | F1-1053-50 IMPERIAL |
| KP80 | 8.0 | 0.488 | 86 | 3.37 | 2400 | 1500/100 | 2000/140 | 2828-AA METRIC | F1-1053-75 IMPERIAL |

Kit includes washers and mounting bolts. Use all washers. Mounting bolts are grade 5. **Do not substitute.**

KP10 cannot be used in duplex pump applications.

KP08-80

# PUMP KITS
# AFC SERIES

## Pump Performance

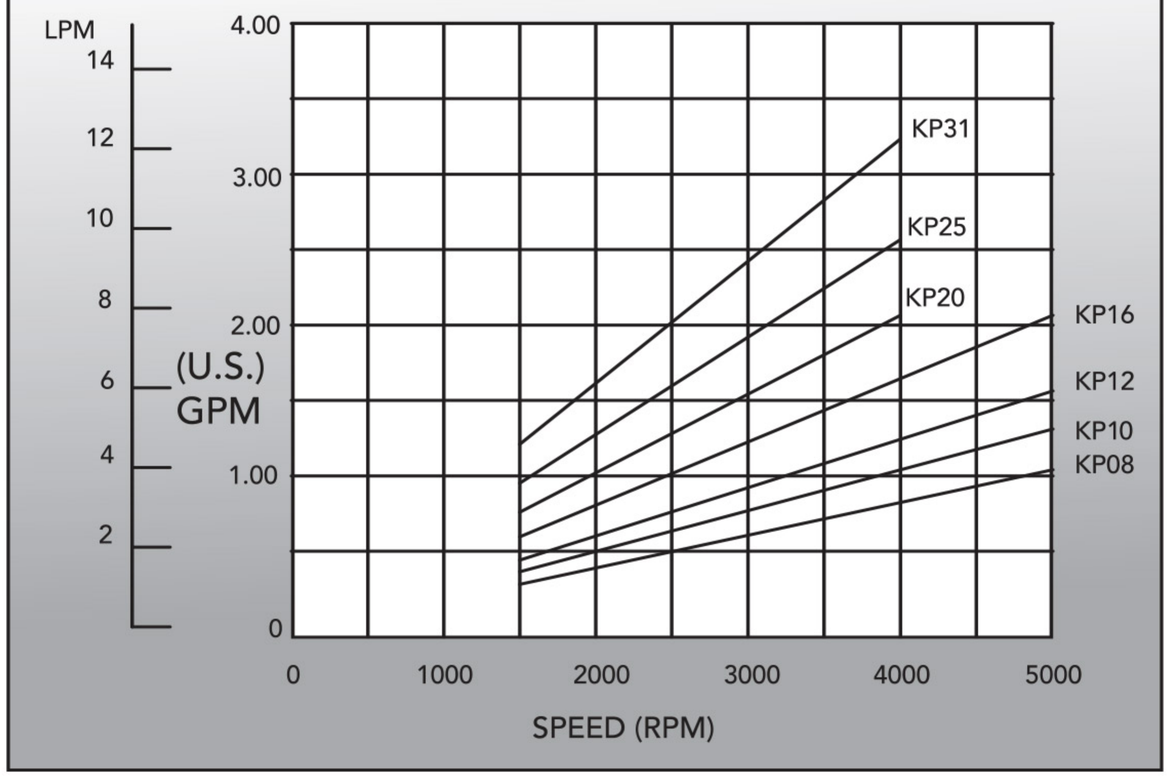


## Pump Performance

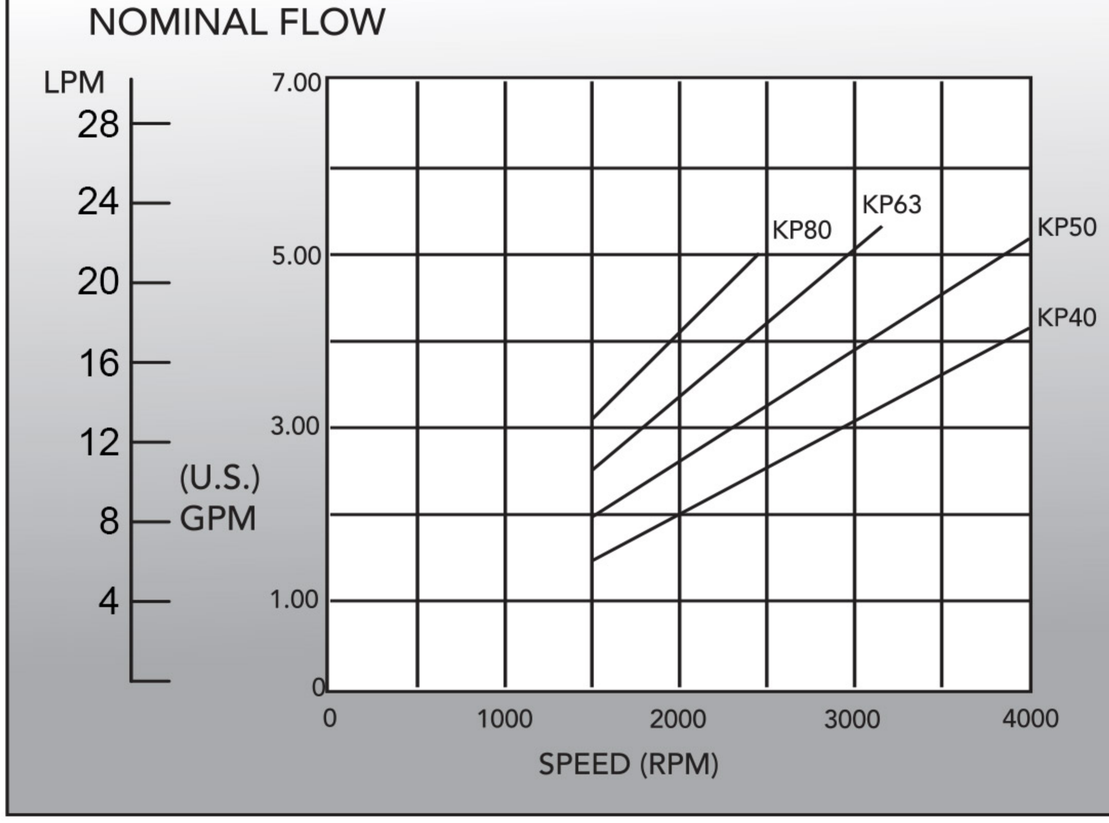

# SECTION 10

# TIMERS, OVERLOADS, CONTACTORS, RELAYS

US FURNACES, LLC MAX 4000

**Manual Motor Protectors**

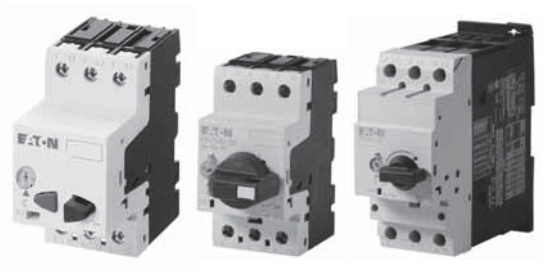

## Contents


| *Description* | *Page* |
|---|---|
| Relays and Timers | **V5-T1-3** |
| Miniature Controls | **V5-T1-18** |
| Contactors and Starters | **V5-T1-35** |
| Thermal Overload Relays | **V5-T1-128** |
| C440/*XT* Electronic Overload Relay | **V5-T1-141** |
| Manual Motor Protectors | |
| Features and Benefits | **V5-T1-158** |
| Standards and Certifications | **V5-T1-158** |
| Product Identification | **V5-T1-159** |
| Catalog Number Selection | **V5-T1-160** |
| Product Selection | **V5-T1-161** |
| Accessories | **V5-T1-164** |
| Technical Data and Specifications | **V5-T1-176** |
| Dimensions | **V5-T1-185** |
| Combination Motor Controllers | **V5-T1-193** |
| *XT* Electronic Manual Motor Protector | **V5-T1-216** |
| EMS—Electronic Motor Starter | **V5-T1-229** |
| Reference Data | **V5-T1-231** |


# Manual Motor Protectors

## Product Description

Eaton's new ***XT*** family of manual motor protectors (MMPs) features a pushbutton or rotary ON/OFF manual disconnect, Class 10 adjustable bimetallic overload relay and fixed magnetic short-circuit trip capability in one compact unit. Two frame sizes are available: Frame B (45 mm) for motors with FLA ratings up to 32A and Frame D (55 mm) covers motor FLA ratings up to 65A.

## Application Description

The XTPB and XTPR MMPs can be used in the following applications.

### *Motor Protective Circuit Breaker*

In many countries outside of the United States and Canada, especially Europe, the MMPs are tested and classified as thermal-magnetic circuit breakers for use in motor branch circuits. This can be an important consideration for all companies who export their equipment and machines internationally. Both the XTPB and XTPR conform to IEC/EN 60947 and have the CE Mark.

### *Manual Motor Protectors*

The XTPB and XTPR MMPs are UL listed under UL 508 as manual motor protectors. They provide an economical solution for applications requiring simple manual starting and stopping of motors. When used as a manual starter, they are typically installed in an enclosure. Many enclosures are offered as accessories for the MMPs. Separate short-circuit protective devices, such as circuit breakers or fuses, are wired ahead of the MMPs. The short-circuit protective device should be sized per the NEC and should not exceed 400% of the maximum FLA dial setting of the MMP.

### *Group Motor Installations*

A group motor installation can be defined as more than one motor circuit protected by a single set of fuses or circuit breaker on a motor branch circuit. This eliminates the need for individual fuses or circuit breakers for each motor circuit. Substantial component cost savings, panel space savings and reduced wiring installation time can be achieved in group motor installations.

The MMPs are tested and listed for group installation. If remote operation is required, a magnetic contactor can be wired in series with the MMP.

Article 430.53 of the NEC contains the rules and requirements for group motor installations. Refer to application note AP03402001E for NEC requirement for group motor installation.

### *Individual Branch Motor Applications*

A UL 508 Type E self-protected manual combination starter/motor controller consists of a single device possessing four essential elements: disconnect, short circuit protection, motor controller, and motor overload protection. Some MMPs require use of a lineside adapter for this type of approval. When tested as an official combination by UL, this device takes the place of a fuse-starter or breaker-starter, ***XT*** Type E MMPs are self-protected, meaning they do not need additional short circuit protection of a fuse or breaker. Type E devices can also be used with a contactor or other types of UL approved controllers. If tested with a contactor, the combination motor controller becomes a Type F device. See **Page V5-T1-199** for XTFC Type F devices.

1

## Features and Benefits

- ON/OFF rotary handle with lockout provision
- Visible trip indication
- Class 10 overload protection
- Phase loss sensitivity
- Ambient temperature compensation to IEC/EN 60947, VDE 0660
- Fixed short-circuit trip—14 times maximum setting of overload FLA dial
- Type 2 coordination per IEC 947
- Identification markers standard on starter faceplate
- Motor applications from 0.1A to 65A
- Built-in heater and magnetic trip elements to protect the motor
- Adjustment dial for setting motor FLA
- DIN rail mount
- Terminal types available:
  - Screw terminals
  - Screw (line) and spring cage (load) terminals
  - Spring cage terminals
- Accessories include:
  - Front and side auxiliary contacts
  - Trip indicating contacts
  - Tamperproof cover for OLR dial
  - Undervoltage release
  - Shunt trip
  - Through-the-door operators
  - Enclosures
  - Three-phase line side connecting links

## Standards and Certifications

- CE approved
- UL listed File No. E245398
- UL 508 group motor and Type E compliant
- IEC/EN 60947
- CSA File 229767, Class 3211-05
- DIN VDE 0660 Part 100, Part 101 and Part 102

**Note:** For Type 2 Coordination of MMCs, see **Page V5-T1-232**.

## Line Side Adapters—When to Use Them

**Note:** Line side adapters are not required for non-US applications. Most countries outside of the US classify the MMP as a thermal magnetic circuit breaker.

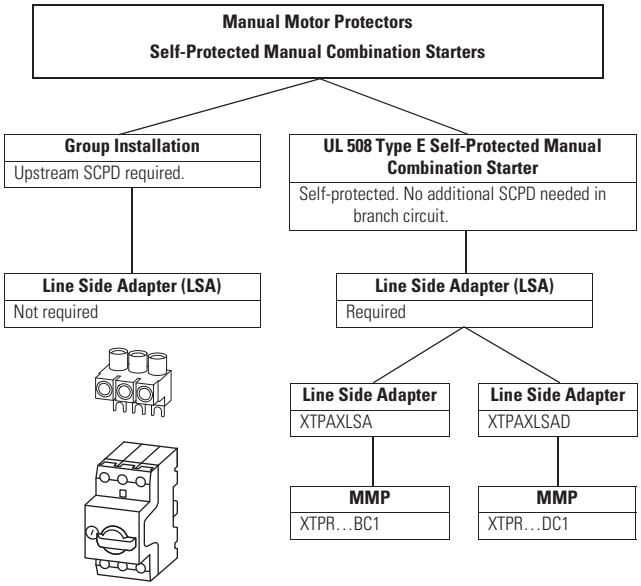


**Manual Motor Protector and Line Side Adapter**

## Product Identification

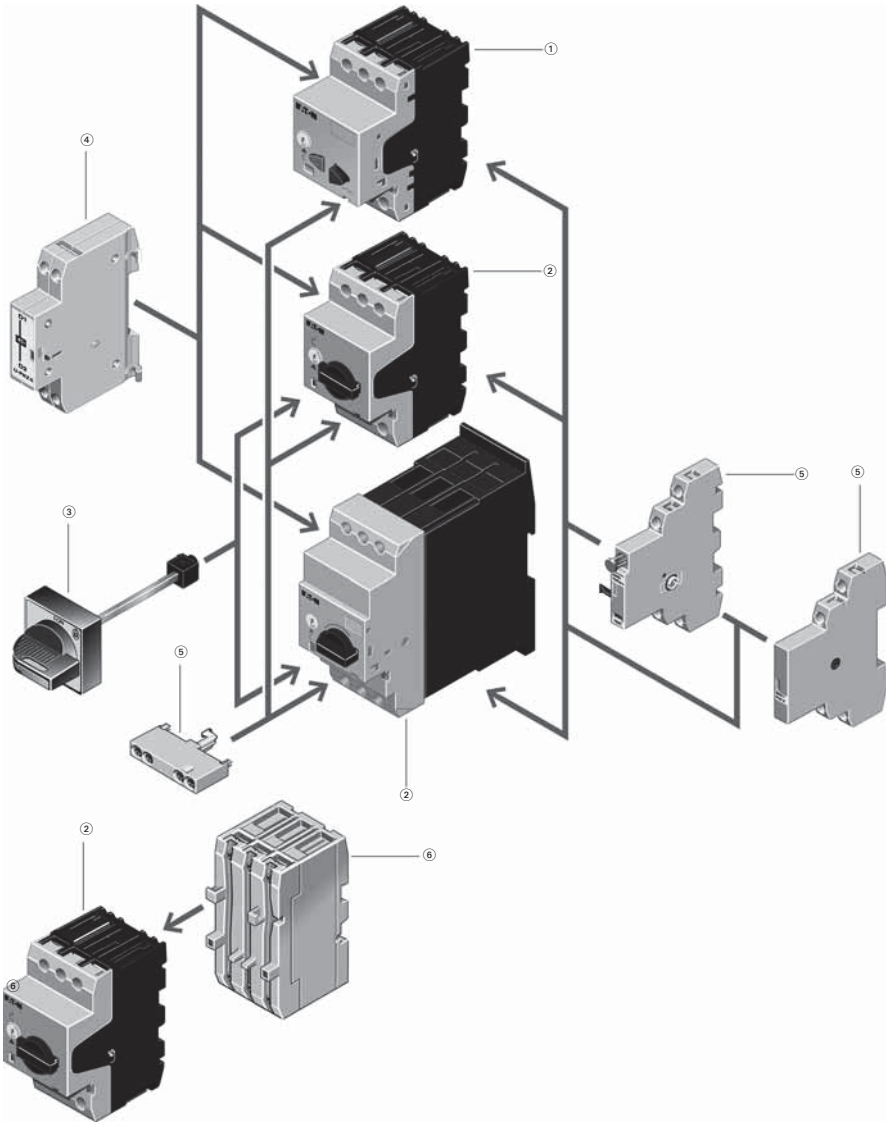


***Notes***

**Basic Units**

① XTPB pushbutton manual motor protectors (see **Page V5-T1-161**)
- Rated operational current up to 25A
- Switching capacity 50 kA/415V
- Short-circuit release, adjustable 0.6–1 x $I_u$
- Single-phasing sensitive

② XTPR rotary manual motor protectors (see **Page V5-T1-162**)
- Rated operational current up to 32A, 65A
- Switching capacity 150/50 kA/415V
- Short-circuit release, fixed setting to 14 x $I_u$
- Overload release, adjustable 0.6–1 x $I_u$
- Single-phasing sensitive
- With screws or spring-loaded terminals

**Mounting Accessories**

③ Rotary handle mechanism (see **Page V5-T1-167**)
- ON/OFF/tripped switch position indication
- Lockable door/cover interlock
- Extendable y plug fit extension shaft
- Handle latched in switch positions
- Optionally also without locking and door interlock function

Insulated enclosures (see **Page V5-T1-171**)
- Surface mounting, enclosures, IP40, IP55 and IP40 and IP55 front flush mounting enclosure

Mounting/wiring (see **Page V5-T1-167**)
- Component adapter for busbar mounting
- Three-phase commoning link for side-by-side-mounting
- Mounting kits for rapid mounting of direct-on-line, reversing and star-delta starters

**Add-On Functions**

④ Voltage releases (see **Page V5-T1-166**)
- Undervoltage release
- Shunt releases
- With screws or spring-loaded terminals

⑤ Standard auxiliary contacts (see **Page V5-T1-164**)
- ON/OFF indication
- Differential fault indication overload/short-circuit release
- ON/OFF for (high capacity) contact module
- ON/OFF for starter combination
- With early-make contacts
- With screws or spring-loaded terminals

⑥ Current limiter (see **Page V5-T1-166**)
- Increases the switching capacity of the 10–25A manual motor protectors to 100 kA/440V
- Can be used for individual group protection

1

## Catalog Number Selection

### *XT* Manual Motor Protectors

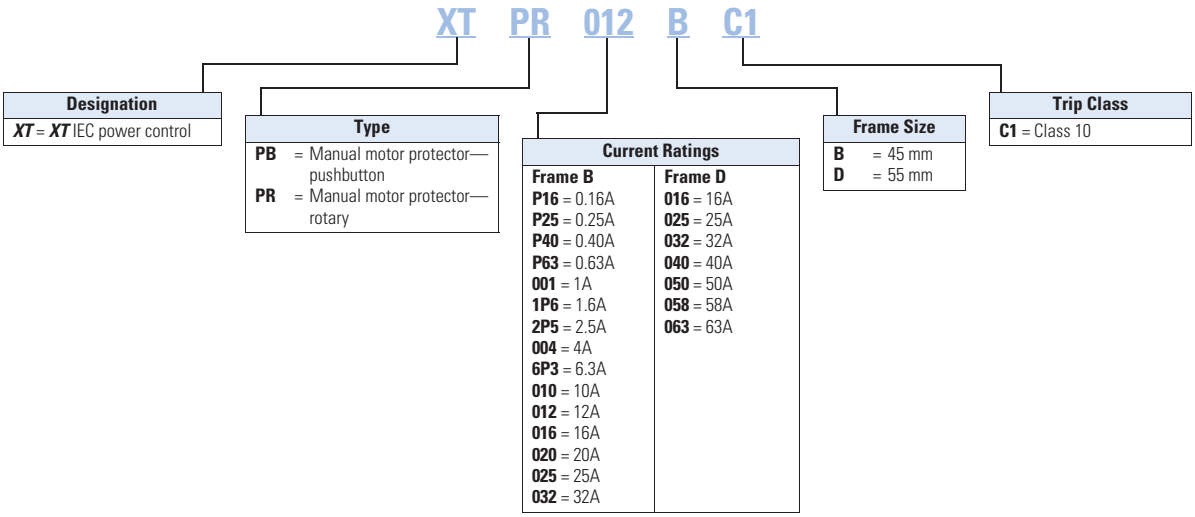

## Product Selection

### *Product Selection for Manual Motor Starter Applications*

When ordering, specify catalog numbers according to the following stipulations:

***XT*** manual motor protectors are selected based on the overload current range required for a given motor. This current range is determined from the motor full load ampere rating and motor service factor usually found on the motor nameplate.

**For motors with service factors less than 1.15,** multiply the motor FLA by 0.90 to select appropriate MMP.

Example: For motor having FLA of 6.4A and service factor of 1.0 (6.4A x 0.90 = 5.76A) select catalog number XTPB6P3B01.

See Application Note—AP03402001E.

**For motor with service factor of 1.15 or greater,** use motor nameplate full load amperes to select the appropriate MMP.

Example: For motor having FLA of 11A and service factor of 1.15, select catalog number XTPR012BC1.

**Frame B**



### XTPB Pushbutton Manual Motor Protectors—Global and North American Ratings—Frame B

Type 1 and Type 2 Coordination Motor Protective Device with Thermal and Magnetic Trip

| Rated Uninterrupted Current— $I_u = I_e$ (Amps) | FLA Adjustment Range/ Overload Release— $I_r$ (Amps) | Short Circuit Release— $I_{rm}$ (Amps) | Maximum Motor Ratings ① Maximum kW Rating AC-3—P (kW) Three-Phase | | | | | Maximum hp Rating—P (hp) UL 508/CSA C22.2 No. 14 Three-Phase | | | | Screw Terminal Catalog Number |
|---|---|---|---|---|---|---|---|---|---|---|---|---|
| | | | 220–240V | 380–415V | 440V | 500V | 660–690V | 200V | 240V | 480V | 600V | |
| 0.16 | 0.1–0.16 | 2.2 | — | — | — | — | 0.06 | ② | ② | ② | ② | **XTPBP16BC1** |
| 0.25 | 0.16–0.25 | 3.5 | — | 0.06 | 0.06 | 0.06 | 0.12 | ② | ② | ② | ② | **XTPBP25BC1** |
| 0.4 | 0.25–0.4 | 5.6 | 0.06 | 0.09 | 0.12 | 0.12 | 0.18 | ② | ② | ② | ② | **XTPBP40BC1** |
| 0.63 | 0.4–0.63 | 8.8 | 0.09 | 0.12 | 0.18 | 0.25 | 0.25 | ② | ② | ② | ② | **XTPBP63BC1** |
| 1 | 0.63–1 | 14 | 0.12 | 0.25 | 0.25 | 0.37 | 0.55 | ② | ② | 2 | 1/2 | **XTPB001BC1** |
| 1.6 | 1–1.6 | 22 | 0.25 | 0.55 | 0.55 | 0.75 | 1.1 | ② | ② | 3/4 | 3/4 | **XTPB1P6BC1** |
| 2.5 | 1.6–2.5 | 35 | 0.37 | 0.75 | 1.1 | 1.1 | 1.5 | 1/2 | 1/2 | 1 | 1-1/2 | **XTPB2P5BC1** |
| 4 | 2.5–4 | 56 | 0.75 | 1.5 | 1.5 | 2.2 | 3 | 3/4 | 3/4 | 2 | 3 | **XTPB004BC1** |
| 6.3 | 4–6.3 | 88 | 1.1 | 2.2 | 3 | 3 | 4 | 1 | 1-1/2 | 3 | 5 | **XTPB6P3BC1** |
| 10 | 6.3–10 | 140 | 2.2 | 4 | 4 | 4 | 7.5 | 3 | 3 | 7-1/2 | 10 | **XTPB010BC1** |
| 12 | 8–12 | 168 | 3 | 5.5 | 5.5 | 5.5 | 11 | 3 | 3 | 7-1/2 | 10 | **XTPB012BC1** |
| 16 | 10–16 | 224 | 4 | 7.5 | 9 | 9 | 12.5 | 3 | 5 | 10 | 10 | **XTPB016BC1** |
| 20 | 16–20 | 280 | 5.5 | 9 | 11 | 12.5 | 15 | 5 | — | — | 15 | **XTPB020BC1** |
| 25 | 20–25 | 350 | 5.5 | 12.5 | 12.5 | 15 | 22 | — | 7-1/2 | 15 | 20 | **XTPB025BC1** |

***Notes***

Single-phasing sensitivity to IEC/EN 60947-4-1, VDE 0660 Part 102.

Can be snap-fit to IEC/EN 60715 top-hat (DIN) with 7.5 or 15 mm height.

Service Factor (SF)—Setting $I_r$ of current scale in dependence of load factor:
SF = 1.15 → $I_r = 1 \times I_{n\ mot}$
SF = 1 → $I_r = 0.9 \times I_{n\ mot}$

For manual motor protective circuit breaker switching capacity, see **Page V5-T1-181**.

① Select manual motor protectors by full load amperes. Maximum motor ratings (kW, hp) are for reference only.

② In this range, calculate motor rating according to rated current. Specified values to NEC 430.6(A)(1).

Frame B



## XTPR Rotary Manual Motor Protectors with Screw Terminals—Global Ratings and North American Ratings—Frame B

Type 1 and Type 2 Coordination Motor Protective Device with Thermal and Magnetic Trip

| Rated Uninterrupted Current—$I_u = I_e$ (Amps) | FLA Adjustment Range/ Overload Release—$I_r$ (Amps) | Short Circuit Release—$I_{rm}$ (Amps) | Maximum Motor Ratings ① Maximum kW Rating AC-3—P (kW) Three-Phase 220–240V | 380–415V | 440V | 500V | 660–690V | Maximum hp Rating—P (hp) UL 508/CSA C22.2 No. 14 Three-Phase 200V | 240V | 480V | 600V | Screw Terminal Catalog Number |
|---|---|---|---|---|---|---|---|---|---|---|---|---|
| 0.16 | 0.1–0.16 | 2.2 | — | — | — | — | 0.06 | ② | ② | ② | ② | **XTPRP16BC1** |
| 0.25 | 0.16–0.25 | 3.5 | — | 0.06 | 0.06 | 0.06 | 0.12 | ② | ② | ② | ② | **XTPRP25BC1** |
| 0.4 | 0.25–0.4 | 5.6 | 0.06 | 0.09 | 0.12 | 0.12 | 0.18 | ② | ② | ② | ② | **XTPRP40BC1** |
| 0.63 | 0.4–0.63 | 8.8 | 0.09 | 0.12 | 0.18 | 0.25 | 0.25 | ② | ② | ② | ② | **XTPRP63BC1** |
| 1 | 0.63–1 | 14 | 0.12 | 0.25 | 0.25 | 0.37 | 0.55 | ② | ② | ② | ② | **XTPR001BC1** |
| 1.6 | 1–1.6 | 22 | 0.25 | 0.55 | 0.55 | 0.75 | 1.1 | ② | ② | 3/4 | 3/4 | **XTPR1P6BC1** |
| 2.5 | 1.6–2.5 | 35 | 0.37 | 0.75 | 1.1 | 1.1 | 1.5 | 1/2 | 1/2 | 1 | 1-1/2 | **XTPR2P5BC1** |
| 4 | 2.5–4 | 56 | 0.75 | 1.5 | 1.5 | 2.2 | 3 | 3/4 | 3/4 | 2 | 3 | **XTPR004BC1** |
| 6.3 | 4–6.3 | 88 | 1.1 | 2.2 | 3 | 3 | 4 | 1 | 1-1/2 | 3 | 5 | **XTPR6P3BC1** |
| 10 | 6.3–10 | 140 | 2.2 | 4 | 4 | 4 | 7.5 | 3 | 3 | 7-1/2 | 10 | **XTPR010BC1** |
| 12 | 8–12 | 168 | 3 | 5.5 | 5.5 | 5.5 | 11 | 3 | 3 | 7-1/2 | 10 | **XTPR012BC1** |
| 16 | 10–16 | 224 | 4 | 7.5 | 9 | 9 | 12.5 | 3 | 5 | 10 | 10 | **XTPR016BC1** |
| 20 | 16–20 | 280 | 5.5 | 9 | 11 | 12.5 | 15 | 5 | — | — | 15 | **XTPR020BC1** |
| 25 | 20–25 | 350 | 5.5 | 12.5 | 12.5 | 15 | 22 | — | 7-1/2 | 15 | 20 | **XTPR025BC1** |
| 32 | 25–32 | 448 | 7.5 | 15 | 15 | 22 | 30 | 7-1/2 | 10 | 20 | 25 | **XTPR032BC1** |

Frame D



## XTPR Rotary Manual Motor Protectors with Screw Terminals—Global Ratings and North American Ratings—Frame D

Type 1 and Type 2 Coordination Motor Protective Device with Thermal and Magnetic Trip

| Rated Uninterrupted Current—$I_u = I_e$ (Amps) | FLA Adjustment Range/ Overload Release—$I_r$ (Amps) | Short Circuit Release—$I_{rm}$ (Amps) | Maximum Motor Ratings ① Maximum kW Rating AC-3—P (kW) Three-Phase 220–240V | 380–415V | 440V | 500V | 660–690V | Maximum hp Rating—P (hp) UL 508/CSA C22.2 No. 14 Three-Phase 200V | 240V | 480V | 600V | Screw Terminal Catalog Number |
|---|---|---|---|---|---|---|---|---|---|---|---|---|
| 16 | 10–16 | 224 | 4 | 7.5 | 9 | 9 | 12.5 | 3 | 5 | 10 | 15 | **XTPR016DC1** |
| 25 | 16–25 | 350 | 5.5 | 12.5 | 12.5 | 15 | 22 | 7-1/2 | 7-1/2 | 15 | 20 | **XTPR025DC1** |
| 32 | 25–32 | 448 | 7.5 | 15 | 17.5 | 22 | 22 | 10 | 10 | 20 | 30 | **XTPR032DC1** |
| 40 | 32–40 | 560 | 11 | 20 | 22 | 24 | 30 | 10 | 15 | 30 | 30 | **XTPR040DC1** |
| 50 | 40–50 | 700 | 14 | 25 | 30 | 30 | 45 | 10 | 15 | 30 | 40 | **XTPR050DC1** |
| 58 | 50–58 | 812 | 17 | 30 | 37 | 37 | 55 | 15 | 15 | 40 | 50 | **XTPR058DC1** |
| 65 | 55–65 | 882 | 18.5 | 34 | 37 | 45 | 55 | 15 | 15 | 40 | 50 | **XTPR063DC1** |

***Notes***

Single-phasing sensitivity to IEC/EN 60947-4-1, VDE 0660 Part 102.

Can be snap-fit to IEC/EN 60715 top-hat (DIN) with 7.5 or 15 mm height.

Service Factor (SF)—Setting $I_r$ of current scale in dependence of load factor:

SF = 1.15 → $I_r = 1 \times I_{n\ mot}$

SF = 1 → $I_r = 0.9 \times I_{n\ mot}$

For manual motor protective circuit breaker switching capacity, see **Page V5-T1-181**.

① Select manual motor protectors by full load amperes. Maximum motor ratings (kW, hp) are for reference only.

② In this range, calculate motor rating according to rated current. Specified values to NEC 430.6(A)(1).

Frame B



## XTPR Manual Self-Protected Motor Starters—North American Ratings, UL 508 Type E—Frame B ①

Motor Protective Device with Thermal and Magnetic Trip

| Rated Uninterrupted Current—$I_u$ (Amps) | FLA Adjustment Range/ Overload Release—$I_r$ (Amps) | Short Circuit Release—$I_{rm}$ (Amps) | Maximum Motor Ratings ② Maximum hp Rating—P (hp) Three-Phase 200V | 240V | 480V/ 277V | 600V/ 247V | Rated Short-Circuit Breaking Capacity (kA) 480/ 277V | 600/ 347V | Line Side Adapter ① Catalog Number | Manual Motor Protector—Screw Terminal Catalog Number |
|---|---|---|---|---|---|---|---|---|---|---|
| 0.16 | 0.1–0.16 | 2.2 | ③ | ③ | 1/2 | 1/2 | 50 | 50 | **XTPAXLSA** | **XTPRP16BC1** |
| 0.25 | 0.16–0.25 | 3.4 | ③ | ③ | 1/2 | 1/2 | 50 | 50 | **XTPAXLSA** | **XTPRP25BC1** |
| 0.4 | 0.25–0.4 | 5.6 | ③ | ③ | 1/2 | 1/2 | 50 | 50 | **XTPAXLSA** | **XTPRP40BC1** |
| 0.63 | 0.4–0.63 | 8.8 | ③ | ③ | 1/2 | 1/2 | 50 | 50 | **XTPAXLSA** | **XTPRP63BC1** |
| 1 | 0.63–1 | 14 | ③ | ③ | 1/2 | 1/2 | 50 | 50 | **XTPAXLSA** | **XTPR001BC1** |
| 1.6 | 1–1.6 | 22 | ③ | ③ | 3/4 | 3/4 | 50 | 50 | **XTPAXLSA** | **XTPR1P6BC1** |
| 2.5 | 1.6–2.5 | 35 | 1/2 | 1/2 | 1 | 1-1/2 | 50 | 50 | **XTPAXLSA** | **XTPR2P5BC1** |
| 4 | 2.5–4 | 56 | 3/4 | 1 | 2 | 3 | 50 | 50 | **XTPAXLSA** | **XTPR004BC1** |
| 6.3 | 4–6.3 | 88 | 1 | 1-1/2 | 3 | 5 | 65 | 50 | **XTPAXLSA** | **XTPR6P3BC1** |
| 10 | 6.3–11 | 140 | 3 | 3 | 7-1/2 | 10 | 65 | 50 | **XTPAXLSA** | **XTPR010BC1** |
| 12 | 8–12 | 168 | 3 | 3 | 7-1/2 | — | 65 | — | **XTPAXLSA** | **XTPR012BC1** |
| 16 | 10–16 | 224 | 3 | 5 | 10 | — | 42 | — | **XTPAXLSA** | **XTPR016BC1** |
| 20 | 16–20 | 280 | 5 | 5 | — | — | 18 | — | **XTPAXLSA** | **XTPR020BC1** |
| 25 | 20–25 | 350 | 5 | 7-1/2 | 15 | — | 18 | — | **XTPAXLSA** | **XTPR025BC1** |
| 32 | 25–32 | 448 | 7-1/2 | 10 | 25 | — | 18 | — | **XTPAXLSA** | **XTPR032BC1** |

Frame D



## XTPR Manual Self-Protected Motor Starters—North American Ratings, UL 508 Type E—Frame D ①

Motor Protective Device with Thermal and Magnetic Trip

| Rated Uninterrupted Current—$I_u$ (Amps) | FLA Adjustment Range/ Overload Release—$I_r$ (Amps) | Short Circuit Release—$I_{rm}$ (Amps) | Maximum Motor Ratings ② Maximum hp Rating—P (hp) Three-Phase 200V | 240V | 480V/ 277V | 600V/ 247V | Rated Short-Circuit Breaking Capacity (kA) 240V | 480/ 277V | 600/ 347V | Line Side Adapter ① Catalog Number | Manual Motor Protector—Screw Terminal Catalog Number |
|---|---|---|---|---|---|---|---|---|---|---|---|
| 16 | 10–16 | 224 | 3 | 5 | 10 | 10 | 65 | 65 | 25 | **XTPAXLSAD** | **XTPR016DC1** |
| 25 | 16–25 | 350 | 7-1/2 | 7-1/2 | 20 | 25 | 65 | 65 | 25 | **XTPAXLSAD** | **XTPR025DC1** |
| 32 | 25–32 | 448 | 10 | 10 | 25 | 30 | 65 | 65 | 25 | **XTPAXLSAD** | **XTPR032DC1** |
| 40 | 32–40 | 560 | 10 | — | 30 | 30 | 65 | 65 | 25 | **XTPAXLSAD** | **XTPR040DC1** |
| 50 | 40–50 | 700 | — | 15 | 30 | — | 65 | 65 | — | **XTPAXLSAD** | **XTPR050DC1** |
| 58 | 50–58 | 812 | — | — | 40 | — | 65 | 65 | — | **XTPAXLSAD** | **XTPR058DC1** |
| 65 | 55–65 | 882 | — | — | 40 | — | 65 | 65 | — | **XTPAXLSAD** | **XTPR063DC1** |

***Notes***

A UL 508 Type E self-protected manual combination starter (XTPR) consists of a manual motor protector (XTPR) and a UL Listed line side adapter (for example, XTPAXLSA). The Type E self-protected manual combination starter alone is a legitimate short-circuit protective device and disconnect means for the downstream motor, while the contactor has been added to provide remote operation of the motor circuit. Conductor size for XTPAXLSA is 14–6 AWG, XTPAXLSAD is 8 AWG–1/0.

① UL 508 Type E starters are assembled from a standard XTPR and a special incoming terminal line side adapter (XTPAXLSA or XTPAXLSAD).

② Select manual motor protectors by full load amperes. Maximum motor ratings (kW, hp) are for reference only.

③ In this range, calculate motor rating according to rated current. Specified values to NEC 430.6(A)(1).

1

## Accessories

### *Auxiliary Contacts*

**XTPAXSA_**



### Side-Mount Auxiliary Contacts

| Contact Configuration | Contact Sequence | Pkg. Qty. ① | Screw Terminal Catalog Number |
|---|---|---|---|
| 1NO-1NC | 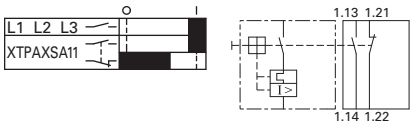 | 5 | **XTPAXSA11** |
| 1NO-2NC | 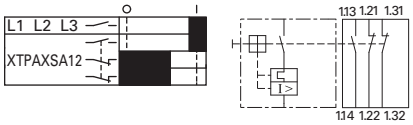 | 5 | **XTPAXSA12** |
| 2NO-1NC | 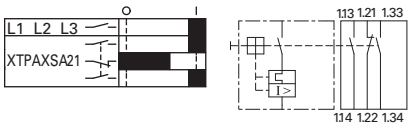 | 5 | **XTPAXSA21** |

Can be fitted on the right side of manual motor protectors (XTPB, XTPR, XTPM) and manual transformer protectors (XTPT) and can be combined with XTPAXSATR_ and XTPAXFA_ trip indicating auxiliary contact.

**XTPAXFA11**



### Front-Mount Auxiliary Contacts

| Contact Configuration | Contact Sequence | Pkg. Qty. ① | Screw Terminal Catalog Number |
|---|---|---|---|
| 1NO-1NC | 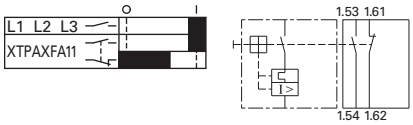 | 5 | **XTPAXFA11** |

Can be fitted to manual motor protectors (XTPB, XTPR, XTPM) and manual transformer protectors (XTPT). 45 mm (XTPR…B and XTPB) or 55 mm (XTPR…D) widths of manual motor protectors remain unchanged.

***Note***

① Orders must be placed in multiples of package quantity listed.

## Side-Mount Trip Indicating Auxiliary Contacts

**XTPAXSATR_**



| Contact Configuration | Contact Sequence | Pkg. Qty. ① | For Use with… | Catalog Number |
|---|---|---|---|---|
| 2 x 1NO | 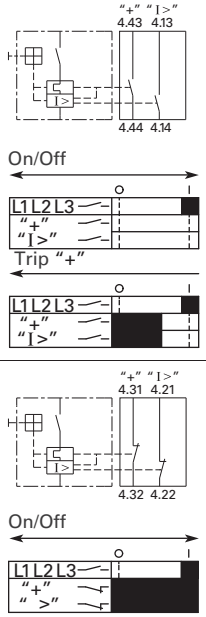 | 2 | XTPB, XTPR, XTPM, XTPT | **XTPAXSATR20** |
| 2 x 1NC |  | 2 | XTPB, XTPR, XTPM, XTPT | **XTPAXSATR02** |



Can be fitted on the right side of manual motor protectors. Can be combined with standard auxiliary contacts. Trip indication: A. General trip indication (overload) B. Short-circuit trip. Local short-circuit indication by red indicator, manually resettable.

## Early-Make Front-Mount Auxiliary Contacts

**XTPBXFAEM20**



| Contact Configuration | Contact Sequence | Pkg. Qty. ① | For Use with… | Catalog Number |
|---|---|---|---|---|
| 2NO | 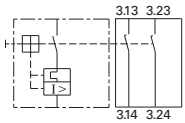 | 5 | XTPB | **XTPBXFAEM20** |



**XTPAXFAEM20**



| Contact Configuration | Contact Sequence | Pkg. Qty. ① | For Use with… | Catalog Number |
|---|---|---|---|---|
| 2NO | | 2 | XTPR, XTPM, XTPT | **XTPAXFAEM20** ② |

For use with XTPB_, Frame B XTPR and XTPT. Can be fitted to the front of a manual motor protector. 45 mm width of manual motor protector remains unchanged. For early energization of undervoltage release, for example, in emergency-stop circuits to EN 60204.

***Notes***

① Orders must be placed in multiples of package quantity listed.

② Not for use with rotary handle mechanism.

## *Additional Accessories*

### Shunt Release

**XTPAXSR_**



**Contact Sequence**

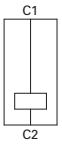


| Pkg. Qty. ① | Screw Terminal Catalog Number |
|---|---|
| 2 | **XTPAXSR24V50H** |
| 2 | **XTPAXSR48V50H** |
| 2 | **XTPAXSR110V50H** |
| 2 | **XTPAXSR120V60H** |
| 2 | **XTPAXSR208V60H** |
| 2 | **XTPAXSR220V50H** |
| 2 | **XTPAXSR230V50H** |
| 2 | **XTPAXSR240V50H** |
| 2 | **XTPAXSR240V60H** |
| 2 | **XTPAXSR380V50H** |
| 2 | **XTPAXSR400V50H** |
| 2 | **XTPAXSR415V50H** |
| 2 | **XTPAXSR440V60H** |
| 2 | **XTPAXSR480V60H** |
| 2 | **XTPAXSR24VDC** |
| 2 | **XTPAXSR48VDC** |
| 2 | **XTPAXSR60VDC** |
| 2 | **XTPAXSR110VDC** |
| 2 | **XTPAXSR125VDC** |
| 2 | **XTPAXSR220VDC** |
| 2 | **XTPAXSR250VDC** |

Can be used to trip the manual motor protector from a remote location. Can be fitted on the left side of manual motor protectors. Cannot be combined with the XTPAXUVR. DC: Intermittent operation 5 sec.

### Undervoltage Release

**XTPAXUVR_**



**Contact Sequence**

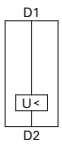


| Pkg. Qty. ① | Screw Terminal Catalog Number |
|---|---|
| 2 | **XTPAXUVR24V50H** |
| 2 | **XTPAXUVR24V60H** |
| 2 | **XTPAXUVR48V50H** |
| 2 | **XTPAXUVR60V50H** |
| 2 | **XTPAXUVR110V50H** |
| 2 | **XTPAXUVR120V60H** |
| 2 | **XTPAXUVR208V60H** |
| 2 | **XTPAXUVR220V50H** |
| 2 | **XTPAXUVR230V50H** |
| 2 | **XTPAXUVR240V50H** |
| 2 | **XTPAXUVR240V60H** |
| 2 | **XTPAXUVR380V50H** |
| 2 | **XTPAXUVR400V50H** |
| 2 | **XTPAXUVR415V50H** |
| 2 | **XTPAXUVR440V60H** |
| 2 | **XTPAXUVR480V60H** |
| 2 | **XTPAXUVR600V60H** |

Can be used to trip the manual motor protector from a remote location. Can be fitted on left side manual motor protectors. Cannot be combined with XTPAXSR. When combined with a circuit breaker, it can be used as emergency-stop device to IEC/EN 60204.

### Current Limiter ②

**XTPAXCL**



| Description | Contact Sequence | Pkg. Qty. ① | Catalog Number |
|---|---|---|---|
| To enhance the switching capacity of non-inherently safe 10–25A manual motor protectors to 150 kA/440V | 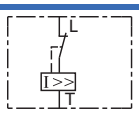 | 1 | **XTPAXCL** |

The XTPAXCL enhances the switching capacity of the XT manual motor protectors. It can be used with the XTPB, XTPR…BC1, XTPR…DC1 for individual or group protections. The rated uninterrupted current is 63A for IEC and 25A for UL/CSA. It can be mounted next to or behind the manual motor protector. See **Page V5-T1-181** for ratings when using the current limiter.

***Notes***

① Orders must be placed in multiples of package quantity listed.

② Max. rated operation voltage $U_e$ = 690V, rated uninterrupted current $I_u$ = 63A. Can be used for individual and group protection. For group protection and in combination with the XTPR…D order additional XTPAXIT incoming terminal if required. Mounting next to or behind the manual motor protector. 16–63A XTPR…D: 100 kA/400V, 10 kA/690V.

## IP65 Rotary Handle Mechanism ①②③④

XTPAXRHM_



| Description | Enclosure Rating | Pkg. Qty. ⑤ | Catalog Number |
|---|---|---|---|
| **Complete Kits—Includes Handle, Shaft and Required Hardware** | | | |
| Rotary handle mechanism—black ⑥ | IP65 NEMA 12 UL/CSA 4X | 1 | **XTPAXRHMB** |
| Rotary handle mechanism—red/yellow ⑦ | | 1 | **XTPAXRHMRY** |
| Rotary handle mechanism—black—rotated 90° from vertical ⑥ | | 1 | **XTPAXRHM90B** |
| Rotary handle mechanism—red/yellow—rotated 90° from vertical ⑦ | | 1 | **XTPAXRHM90RY** |

XTPAXRHMSFT



| | | | |
|---|---|---|---|
| **Separate Parts** | | | |
| Shaft only—includes shaft to mount to XTPR, 175 mm length | — | 10 | **XTPAXRHMSFT** |

XTPAXSW



## Sealing Facility

| Description | Pkg. Qty. ⑤ | Catalog Number |
|---|---|---|
| To prevent tampering with the overload release and the test function. It can be sealed using industry standard sealing wire. For use with XTPR manual motor protectors. | 5 | **XTPAXSW** |

## Three-Phase Commoning Links ⑧

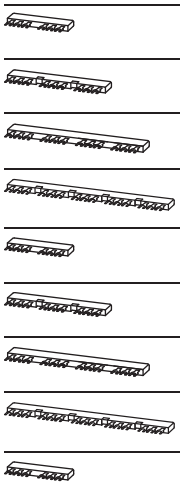

| For Use with… | Qty. MMP | MMP Frame Size | Pkg. Qty. ⑤ | Catalog Number |
|---|---|---|---|---|
| MMP with no side-mounted auxiliaries or voltage releases | 2 | B | 10 | **XTPAXCLKA2** |
| | | D | 1 | **XTPAXCLKA2D** |
| | 3 | B | 10 | **XTPAXCLKA3** |
| | | D | 1 | **XTPAXCLKA3D** |
| | 4 | B | 10 | **XTPAXCLKA4** |
| | | D | 1 | **XTPAXCLKA4D** |
| | 5 | B | 10 | **XTPAXCLKA5** |
| Each MMP with one auxiliary contact or trip-indicating auxiliary contact fitted on the right | 2 | B | 10 | **XTPAXCLKB2** |
| | | D | 1 | **XTPAXCLKB2D** |
| | 3 | B | 10 | **XTPAXCLKB3** |
| | | D | 1 | **XTPAXCLKB3D** |
| | 4 | B | 10 | **XTPAXCLKB4** |
| | | D | 1 | **XTPAXCLKB4D** |
| | 5 | B | 10 | **XTPAXCLKB5** |
| Each MMP with an auxiliary contact and trip-indicating auxiliary contact mounted on the right or a voltage release mounted on the left. | 2 | B | 10 | **XTPAXCLKC2** |
| | 4 | D | 1 | **XTPAXCLKC4D** |

For parallel power feed to several manual motor protectors on terminals 1, 3 and 5.

***Notes***

① Plug-in connection shafts, XTPAXRHMSFT_ can be cut to desired length for mounting depths of 100–240 mm. Carrier with extension shaft included.

② With ON/OFF switch position and "+" (tripped), lockable with 3 padlocks, 4–8 mm hasp. Can be locked in the OFF position, if required.

③ Rotary handle mechanisms ship with door interlock disabled. See instruction publication with product for how to enable door interlock.

④ Not for use with XTPAXFAEM20 early-make front-mount auxiliary contact.

⑤ Orders must be placed in multiples of package quantity listed.

⑥ For use on main switches to IEC/EN 60204.

⑦ For use on main switches with emergency-stop function to IEC/EN 60204.

⑧ Protected against accidental contact. Frame B short-circuit proof $U_e$ = 690V, $I_u$ = 63A. Frame B links can be combined by rotating mounting.

## Shroud for Unused Terminals of Three-Phase Commoning Links

**XTPAXUTS**



| For Use with… | Description | Pkg. Qty. ① | Catalog Number |
|---|---|---|---|
| Frame B XTPR | To cover unused terminals on three-phase commoning link. Protected against direct contact. | 20 | **XTPAXUTS** |

## Incoming Terminals for Three-Phase Commoning Link ②

**XTPAXIT**



| For Use with… | Pkg. Qty. ① | Catalog Number |
|---|---|---|
| Frame B XTPR, XTPB | 5 | **XTPAXIT** |

## Line-Side Adapter ③

**XTPAXLSA**



| For Use with… | Pkg. Qty. ① | Catalog Number |
|---|---|---|
| Frame B XTPR to create a UL 508 Type E/F manual combination starter | 5 | **XTPAXLSA** |

**XTPAXLSAD**



| | | |
|---|---|---|
| Frame D XTPR to create a UL 508 Type E/F manual combination starter | 1 | **XTPAXLSAD** ④ |

### *Combination Connection Kits*

## Non-Reversing Starters

**XTPAXTPCB**

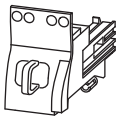

| For Use with… | Description/Comprised of … | Std. Pack ① | Catalog Number |
|---|---|---|---|
| XTPR…B + XTCE…B | Mechanical connection element for XTPR…B and contactor | 1 | **XTPAXTPCB** |
| | Main current wiring between XTPR…B and contactor in toolless plug connection | 1 | |
| | Use contactor auxiliary switch XTCEXFAT_. Control cable guidance: max. six cables up to 2.5 mm$^2$ external diameter or four cables up to 3.5 mm$^2$ external diameter. | | |

**XTPAXEMCB**

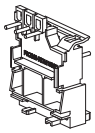

| | | | |
|---|---|---|---|
| XTPR…B + XTCE…B | Mechanical connection element for XTPR…B and contactor | 1 | **XTPAXEMCB** |
| | Main current wiring between XTPR…B and contactor screw in type connection | 1 | |

**XTPAXTPC_**

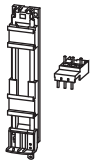

| | | | |
|---|---|---|---|
| XTPR…B + XTCE…C | DIN rail adapter plate<br>Main current wiring between XTPR and contactor | 1 | **XTPAXTPCC** |
| XTPR…D + XTCE…D | DIN rail adapter plate<br>Main current wiring between XTPR and contactor | 1 | **XTPAXTPCD** |

***Notes***

① Orders must be placed in multiples of package quantity listed.

② For three-phase commoning link, protected against accidental contact, $U_e$ = 690V, $I_u$ = 63A;
For conductor cross-sections: 2.5–25 mm$^2$ stranded; 2.5–16 mm$^2$ flexible with ferrules, AWG 14-6.

③ XTPAXLSA is for three-phase commoning link, finger and back-of-hand proof,
$U_e$ = 690V, $I_u$ = 60A for conductor cross sections: 2.5–25 mm$^2$ stranded,
2.5–16 mm$^2$ flexible with ferrule, AWG 14-6.

④ XTPAXLSAD cannot be combined with three-phase commoning links. Conductor size 8 AWG–1/0.

## Reversing Starters

| For Use with… | Description/Comprised of … | Std. Pack ① | Catalog Number |
|---|---|---|---|
| **XTPAXTPCRB** 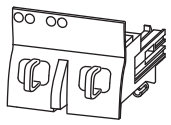 | | | |
| XTPR…B + XTCE…B01_ | Mechanical connection element for XTPR…B and contactor | 1 | **XTPAXTPCRB** |
| | Reversing starter main current wiring in toolless plug connection | 1 | |
| | Control cables for electrical interlocking in toolless plug connection:<br>– K1M: A1–K2M: 21<br>– K1M: 21–K2M: A1<br>– K1M: A2–K2M: A2 | 1 | |
| | Cable guidance | 1 | |
| | Use contactor auxiliary switch XTCEXFAT_. Control cable guidance: max. six cables up to 2.5 $mm^2$ external diameter or four cables up to 3.5 $mm^2$ external diameter. | | |
| **XTPAXTPCRC** 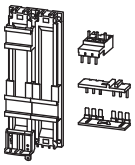 | | | |
| XTPR…B + XTCE…C | DIN rail adapter plate | 1 | **XTPAXTPCRC** |
| | Reversing starter main current wiring | 1 | |

***Note***

① Orders must be placed in multiples of package quantity listed.

## Electrical Connection Module

**XTPAXECM_**

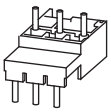

| For Use with… | Description/Comprised of … | Std. Pack ① | Catalog Number |
|---|---|---|---|
| XTPR…B + XTCE…C | Main current wiring between XTPR…B and contactor | 5 | **XTPAXECMC** |
| XTPR…D + XTCE…D | Main current wiring between XTPR…D and contactor | 5 | **XTPAXECMD** |

## DIN Rail Adapter Plates

| For Use with… | Description/Comprised of … | Std. Pack ① | Catalog Number |
|---|---|---|---|
| **XTPAXTPCPB**<br>  <br>XTPAXTPCB<br>XTPAXTPCRB | 45 mm wide adapter plate with one DIN rail<br>Connection element for side-by-side positioning of further plates | 4 | **XTPAXTPCPB** |
| **XTPAXTPCPD**<br>  <br>XTPAXECMD<br>XTPR…D + XTCE…C<br>XTPR…D + XTCE…D | 55 mm wide adapter plate with two DIN rails<br>Connection cams for further plates<br>For use with reversing and star-delta starters | 4 | **XTPAXTPCPD** |

***Note***

① Orders must be placed in multiples of package quantity listed.

***Pushbutton MMP Enclosures***

## Insulated Enclosures for Surface Mounting of XTPB Pushbutton Motor-Protective Circuit Breakers—Global Usage ①

| | Degree of Protection | For Use with… | Description | Catalog Number |
|---|---|---|---|---|
|  | IP40<br>NEMA 1 | XTPB MMP only or with:<br>XTPAXFA_, XTPBXFAEM20,<br>XTPAXSA_, XTPAXUVR_,<br>XTPAXSR_ | — | **XTPBXENCS40** |
| 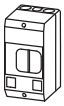 | IP65<br>NEMA<br>3R, 4X, 12, 13 | | With actuation membrane. | **XTPBXENCS65** |
|  | IP65<br>NEMA<br>3R, 4X, 12, 13 | XTPB MMP only or with:<br>XTPAXFA_, XTPAXUVR_,<br>XTPAXSR_, XTPAXCL | Lockable in OFF position. | **XTPBXENCSLO65** |
| | IP65<br>NEMA<br>3R, 4X, 12, 13 | XTPB MMP only or with:<br>XTPAXFA_, XTPBXFAEM20,<br>XTPAXUVR_, XTPAXSR_,<br>XTPAXCL | Lockable in OFF position in combination with XTPBXFAEM20 early-make front-mount auxiliary contact | **XTPBXENCSLE65** |
|  | IP65<br>NEMA<br>3R, 4X, 12, 13 | | With emergency-stop (e-stop) pushbutton actuator, red-yellow | **XTPBXENCSES65** |
| | IP65<br>NEMA<br>3R, 4X, 12, 13 | | With emergency-stop (e-stop) pushbutton actuator, red-yellow key release | **XTPBXENCSEK65** |

## Insulated Enclosures for Surface Mounting of XTPB Pushbutton Manual Motor Protectors—North American Usage ②③

| | Degree of Protection | For Use with… | Description | Catalog Number |
|---|---|---|---|---|
|  | IP41<br>NEMA 1 | XTPB MMP only or with:<br>XTPAXFA_, XTPBXFAEM20,<br>XTPAXSA_, XTPAXUVR_,<br>XTPAXSR_ | — | **XTPBXENAS41** |
| 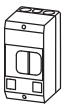 | IP65<br>NEMA<br>3R, 4X, 12, 13 | | With actuating diaphragm | **XTPBXENAS65** |
|  | IP65<br>NEMA<br>3R, 4X, 12, 13 | XTPB MMP only or with:<br>XTPAXFA_, XTPAXUVR_,<br>XTPAXSR_, XTPAXCL | Lockable in OFF position | **XTPBXENASLO65** |
| | IP65<br>NEMA<br>3R, 4X, 12, 13 | XTPB MMP only or with:<br>XTPAXFA_, XTPBXFAEM20,<br>XTPAXUVR_, XTPAXSR_,<br>XTPAXCL | Lockable in OFF position in combination with XTPBXFAEM20 early-make front-mount auxiliary contact | **XTPBXENASLE65** |
|  | IP65<br>NEMA<br>3R, 4X, 12, 13 | | With emergency-stop (e-stop) pushbutton actuator, red-yellow | **XTPBXENASES65** |
| | IP65<br>NEMA<br>3R, 4X, 12, 13 | | With emergency-stop (e-stop) pushbutton actuator, red-yellow key release | **XTPBXENASEK65** |

***Notes***

① Integrated terminal for PE(N) connection, two M25 cable entry knockouts at top and at bottom.

② Built-in terminal for PE(N).

③ North American enclosures come with conduit adapters for use with 1/2 in NPT.

## Insulated Enclosures for Surface Mounting of XTPB Pushbutton Manual Motor Protectors—North American Usage ①

| | Degree of Protection | For Use with… | Description | Catalog Number |
|---|---|---|---|---|
|  | Front IP40<br>NEMA 1 | XTPB MMP only or with:<br>XTPAXFA_, XTPBXFAEM20, XTPAXSA_, XTPAXUVR_, XTPAXSR_ | — | **XTPBXENCF40** |
|  | Front IP65<br>NEMA<br>3R, 4X, 12, 13 | | With actuating diaphragm | **XTPBXENCF55** |
|  | Front IP65<br>NEMA<br>3R, 4X, 12, 13 | XTPB MMP only or with:<br>XTPAXFA_, XTPAXUVR_, XTPAXSR_, XTPAXCL | Lockable in OFF position | **XTPBXENCFLO55** |
| | Front IP65<br>NEMA<br>3R, 4X, 12, 13 | XTPB MMP only or with:<br>XTPAXFA_, XTPBXFAEM20, XTPAXUVR_, XTPAXSR_, XTPAXCL | Lockable in OFF position in combination with XTPBXFAEM20 early-make front-mount auxiliary contact | **XTPBXENCFLE55** |
| 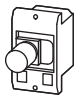 | Front IP65<br>NEMA<br>3R, 4X, 12, 13 | | With emergency-stop (e-stop) pushbutton actuator, red-yellow | **XTPBXENCFES55** |
| | Front IP65<br>NEMA<br>3R, 4X, 12, 13 | | With emergency-stop (e-stop) pushbutton actuator, red-yellow key release | **XTPBXENCFEK55** |

***Note***

① Integrated terminal for PE(N) connection.

***Rotary MMP Enclosures***

## Insulated Enclosures for Surface Mounting of Frame B (0.1–32A) XTPR Motor-Protective Circuit Breakers—Global Usage

| | Degree of Protection | For Use with… | Description | Catalog Number |
|---|---|---|---|---|
|  | IP41 with vertical mounting | Frame B XTPR only or with: XTPAXFA_, XTPAXSA_, XTPAXSATR_, XTPAXUVR_, XTPAXSR_, XTPAXCL | Cover with aperture dimensioned to accommodate front of MMP. IP40, when mounted turned through 90° to left/right | **XTPAXENCS41** ① |
|  | IP65 | | With black/grey rotary handle | **XTPAXENCS65B** ① |
| | IP65 | | With red/yellow rotary handle for use as emergency-stop switches to IEC/EN 60204 | **XTPAXENCS65RY** ① |
| 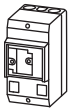 | IP40 | Frame B XTPR only or with: XTPAXSA_, XTPAXUVR_, XTPAXSR_, XTPAXCL | Cover with aperture dimensioned to accommodate front of MMP | **XTPAXENCS40** ② |
| 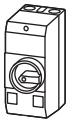 | IP55 | Frame B XTPR only or with: XTPAXFA_, XTPAXSA_, XTPAXUVR_, XTPAXSR_, XTPAXCL | With black/gray rotary handle | **XTPAXENCS55B** ② |
| | IP55 | | With red/yellow rotary handle for use as emergency-stop switches to IEC/EN 60204 | **XTPAXENCS55RY** ② |

## Insulated Enclosures for Surface Mounting of Frame B (0.1–32A) XTPR Rotary Manual Motor Protectors—North American Usage ③

| | Degree of Protection | For Use with… | Description | Catalog Number |
|---|---|---|---|---|
|  | IP55<br>NEMA 1, 12, 3R | Frame B XTPR only or with: XTPAXSA_ and XTPAXFA_, XTPAXUVR_ and XTPAXFA_, XTPAXSR_ and XTPAXFA_, XTPAXCL | With black/gray rotary handle | **XTPAXENAS55B** |
| | | | With red/yellow rotary handle for use as emergency-stop switch to VDE 0113 | **XTPAXENAS55RY** |

## Insulated Enclosures for Surface Mounting of Frame B XTPR (0.1–32A) Rotary Motor-Protective Circuit Breakers with XTPAXFAEM20 Early-Make Front-Mount Auxiliary Contact—Global Usage

| | Degree of Protection | For Use with… | Description | Catalog Number |
|---|---|---|---|---|
|  | IP65 | Frame B XTPR and XTPAXFAEM20 only or with: XTPAXFA_, XTPAXSA_, XTPAXSATR_, XTPAXUVR_, XTPAXSR_, XTPAXCL | With black/gray rotary handle | **XTPAXENCSEM65B** |
| | IP65 | | With red/yellow rotary handle for use as emergency-stop switches to IEC/EN 60204 | **XTPAXENCSEM65RY** |
| 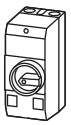 | IP55 | Frame B XTPR and XTPAXFAEM20 only or with: XTPAXFA_, XTPAXUVR_, XTPAXSR_, XTPAXCL | With black/gray rotary handle | **XTPAXENCSEM55B** |
| | IP55 | | With red/yellow rotary handle for use as emergency-stop switches to IEC/EN 60204 | **XTPAXENCSEM55RY** |

***Notes***

① M25 metric cable entry knock-out, top and bottom. Cable push-through membrane, top and bottom, in the back plate and as a control line entry. Includes N and PE terminals.

② Integrated terminal for PE(N) connection, two M25 cable entry knockouts at the top and bottom.

③ Built-in N and PE terminal, lower part without knockouts.



## Insulated Enclosures for Surface Mounting of Frame B XTPR (0.1–32A) Rotary Manual Motor Protectors with XTPAXFAEM20 Early-Make Front-Mount Auxiliary Contact—North American Usage ①

| Degree of Protection | For Use with… | Description | Catalog Number |
|---|---|---|---|
| IP55<br>NEMA 1, 12, 3R | Frame B XTPR only or with:<br>XTPAXSA_, XTPAXUVR_,<br>XTPAXCL | With black/grey rotary handle | **XTPAXENASEM55B** |
| | | With red/yellow rotary handle for use as emergency-stop switch to VDE 0113 | **XTPAXENASEM55RY** |

## Insulated Enclosures for Flush Mounting of Frame B (0.1–32A) XTPR Rotary Manual Motor Protectors—Global Usage ②

| Degree of Protection | For Use with… | Description | Catalog Number |
|---|---|---|---|
| Front IP40 | Frame B XTPR only or with:<br>XTPAXSA_, XTPAXUVR_,<br>XTPAXSR_, XTPAXCL | Cover with aperture dimensioned to accommodate front of MMP | **XTPAXENCF40** |
| Front IP55 | Frame B XTPR only or with:<br>XTPAXSA_, XTPAXUVR_,<br>XTPAXSR_, XTPAXFA_,<br>XTPAXCL | With black/gray rotary handle | **XTPAXENCF55B** |
| | | With red/yellow rotary handle for use as emergency-stop switches to IEC/EN 60204 | **XTPAXENCF55RY** |







## Insulated Enclosures for Surface Mounting of Frame D (10–65A) Rotary Motor-Protective Circuit Breakers

| Degree of Protection | For Use with… | Description | Catalog Number |
|---|---|---|---|
| IP65<br>NEMA 1, 12,<br>3R, 4X | Frame D XTPR only or with:<br>XTPAXFA_, XTPAXFAEM20,<br>XTPAXSA_, XTPAXSATR_,<br>XTPAXUVR_, XTPAXSR_,<br>XTPAXCL | With black/gray rotary handle | **XTPAXENCSD65B** |
| IP65<br>NEMA 1, 12,<br>3R, 4X | | With red/yellow rotary handle for use as emergency-stop switches to IEC/EN 60204 | **XTPAXENCSD65RY** |

***Notes***

① Built-in N and PE terminal, lower part without knockouts.

② Integrated terminal for PE(N) connection.

## *MMP Enclosure Accessories*

**XTPAXPL_**



### XTPR Manual Motor Protector Enclosure Padlock Attachment

| For Use with… | Description | Pkg. Qty. ① | Catalog Number |
|---|---|---|---|
| XTPAXENCS65B, XTPAXENCS65RY, XTPAXENCSEM65B, XTPAXENCSEM65RY, XTPAXENCS55B, XTPAXENCS55RY, XTPAXENCSEM55B, XTPAXENCSEM55RY | Padlocking feature. Up to three padlocks with 3–6 mm hasp thickness. For use as main switch to IEC/EN 60204 | 3 | **XTPAXPL1** ② |
| XTPAXENCSD65B, XTPAXENCSD65RY | | 1 | **XTPAXPL2** ② |
| XTPAXENCF55B, XTPAXENCF55RY | | 3 | **XTPAXPL3** ③ |

**XTPAXNT**



### Neutral Terminal for Use with XTPB and Frame B XTPR Flush-Mount Enclosures

| For Use with… | Description | Pkg. Qty. ① | Catalog Number |
|---|---|---|---|
| XTPBXENCF40, XTPBXENCF55, XTPAXENCF40, XTPAXENCF55B, XTPAXENCF55RY | For connection of a fifth conductor | 20 | **XTPAXNT** |

**XTPAXIL_**

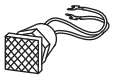

### Indicating Lights with Neon Bulb ④

| Color | Description—Indicating Light | Pkg. Qty. ① | Catalog Number |
|---|---|---|---|
| White | 110–230V | 10 | **XTPAXILWB** |
| | 230–400V | 10 | **XTPAXILWN** |
| | 415–500V | 10 | **XTPAXILWC** |
| Green | 110–230V | 10 | **XTPAXILGB** |
| | 230–400V | 10 | **XTPAXILGN** |
| | 415–500V | 10 | **XTPAXILGC** |
| Red | 110–230V | 10 | **XTPAXILRB** |
| | 230–400V | 10 | **XTPAXILRN** |

For use with XTPR and XTPB enclosures.

Lights do not carry individual IP or NEMA rating. All enclosure ratings remain valid when using indicating lights.

***Notes***

① Orders must be placed in multiples of package quantity listed.
② Lockable in the 0-position of the XTPR manual motor protector.
③ Lockable in the OFF position of the Frame B XTPR manual motor protector.
④ Product is not UL Listed/Registered.

1

## Technical Data and Specifications

### *XT* Manual Motor Protectors

| Description | XTPBP16B–<br>XTPB025B | XTPRP16B–<br>XTPR032B | XTPR016D–<br>XTPR063D |
|---|---|---|---|
| **General** | | | |
| Standards | IEC/EN 60947,<br>VDE 0660, UL 508,<br>CSA C22.2 No. 14 | IEC/EN 60947,<br>VDE 0660, UL 508,<br>CSA C22.2 No. 14 | IEC/EN 60947,<br>VDE 0660, UL 508,<br>CSA C22.2 No. 14 |
| Climatic proofing | ① | ① | ① |
| Ambient temperature, °C | | | |
| Storage | –25/80 | –25/80 | –25/70 |
| Open | –25/55 | –25/55 | –25/55 |
| Enclosed | –25/40 | –25/40 | –25/40 |
| Mounting position | 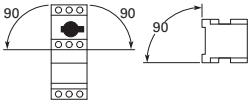 | 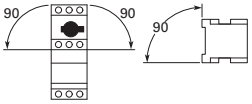 | 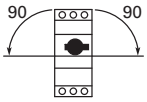 |
| Direction of incoming supply | As required | As required | As required |
| Degree of protection | | | |
| Device | IP20 | IP20 | IP20 |
| Terminals | IP00 | IP00 | IP00 |
| Protection against direct contact | Finger and<br>back-of-hand proof | Finger and<br>back-of-hand proof | Finger and<br>back-of-hand proof |
| Shock resistance half-sinusoidal shock<br>10 ms to IEC 60068-2-27 (g) | 25 | 25 | 15 |
| Altitude (m), maximum | 2000 | 2000 | 2000 |
| Terminal capacity | | | |
| Solid ($mm^2$) | 1 x (1–6)<br>2 x (1–6) | 1 x (1–6)<br>2 x (1–6) | 1 x (1–50)<br>2 x (1–35) |
| Flexible with ferrule to DIN 46228, ($mm^2$) | 1 x (1–6)<br>2 x (1–6) | 1 x (1–6)<br>2 x (1–6) | 1 x (1–35)<br>2 x (1–35) |
| Solid or stranded (AWG) | 18–10 | 18–10 | 14–2 |
| Terminal screw tightening torque | | | |
| Main cable, Nm | 1.7 | 1. | 3 |
| Main cable, lb-in | 15.0 | 15.0 | 26.6 |
| Control circuit cable, Nm | 1 | 1 | 1 |
| Control circuit cable, lb-in | 8.9 | 8.9 | 8.9 |
| **Main Contacts** | | | |
| Rated impulse withstand voltage ($U_{imp}$), Vac | 6000 | 6000 | 6000 |
| Overvoltage category/pollution degree | III/3 | III/3 | III/3 |
| Rated operational voltage ($U_e$), Vac | 690 | 690 | 690 |
| Rated uninterrupted current = rated operational current ($I_u = I_e$) in amperes | 25 or current setting of the overcurrent release | 25 or current setting of the overcurrent release | 25 or current setting of the overcurrent release |
| Rated frequency, Hz | 40–60 | 40–60 | 40–60 |
| Current heat loss (three-pole at operating temperature), W | 6 | 6 | 22 |
| Lifespan, mechanical (ops) | 50,000 | 100,000 | 30,000 |
| Lifespan, electrical (AC-3 at 400V) (ops) | 50,000 | 100,000 | 30,000 |
| Maximum operating frequency, operations/hr | 25 | 40 | 40 |
| Short-circuit rating | | | |
| AC | See **Page V5-T1-181** | See **Page V5-T1-181** | See **Page V5-T1-181** |
| DC (kA) | 60 | 60 (up to XTPR016B)<br>40 (XTPR020B–XTPR032B) | 60 |
| Motor switching capacity | | | |
| AC-3 (up to 690V) in amperes | 25 | 32 | 65 |
| DC-5 (up to 250V) in amperes | 25 | 25 (3 contacts in series) | 63 (3 contacts in series) |

***Note***

① Damp heat, constant, to IEC 60068-2-78; damp heat, cyclic, to IEC 60068-2-30.

## *XT* Manual Motor Protectors, continued

| Description | XTPBP16B–<br>XTPB025B | XTPRP16B–<br>XTPR032B | XTPR016D–<br>XTPR063D |
|---|---|---|---|
| **Releases** | | | |
| Overload release setting range (x $I_u$) | 0.6–1.0 | 0.6–1.0 | 0.6–1.0 |
| Fixed short-circuit release (x $I_u$) | 14 | 14 | 14 |
| Short-circuit release tolerance | ± 20% | ± 20% | ± 20% |
| Phase-failure sensitivity | IEC/EN 60947-1-1,<br>VDE 0660 Part 102 | IEC/EN 60947-1-1,<br>VDE 0660 Part 102 | IEC/EN 60947-1-1,<br>VDE 0660 Part 102 |
| Temperature compensation | | | |
| to IEC/EN 60947, VDE 0660, °C | –5/40 | –5/40 | –5/40 |
| operating range, °C | –25/55 | –25/55 | –25/55 |
| Temperature compensation residual error for T >20°C, %/K | ≤0.25 | ≤0.25 | ≤0.25 |

## Auxiliary Contacts

| Description | XTPAXSA_ _ | XTPAXFA_ _ | XTPA(B)XFAEM_ _ | XTPAXSATR_ _ |
|---|---|---|---|---|
| Rated impulse withstand voltage, $U_{imp}$ (Vac) | 6000 | 4000 | 4000 | 6000 |
| Overvoltage category/pollution degree | III/3 | III/3 | III/3 | III/3 |
| Rated operational voltage | | | | |
| $U_e$ (Vac) | 500 | 440 | 440 | 500 |
| $U_e$ (Vdc) | 250 | 250 | 250 | 250 |
| Safe isolation to VDE 0106 Part 101 and Part 101/A1 between auxiliary contacts and main contacts (Vac) | 690 | 690 | 690 | 690 |
| Rated operational current | | | | |
| AC-15 | | | | |
| 220–240 V, $I_e$ (A) | 3.5 | 1 | 1 | 3.5 |
| 380–415 V, $I_e$ (A) | 2 | — | — | 2 |
| 440–500 V, $I_e$ (A) | 1 | — | — | 1 |
| DC-13 L/R <100 ms | | | | |
| 24 V, $I_e$ (A) | 2 | 2 | 2 | 2 |
| 60 V, $I_e$ (A) | 1.5 | — | — | 1.5 |
| 110 V, $I_e$ (A) | 1 | — | — | 1 |
| 220 V, $I_e$ (A) | 0.25 | — | — | 0.25 |
| **Lifespan** | | | | |
| Mechanical, operations (x $10^6$) | 0.1 | 0.1 | 0.1 | 0.01 |
| Electrical, operations (x $10^6$) | 0.05 | 0.1 | 0.1 | 0.005 |
| Contact reliability (at $U_e$ = 24 Vdc, $U_{min}$–17V, $I_{min}$ = 5.4 mA, fault probability | $<10^{-8}$ <1 fault<br>at 1 x $10^8$ operations | $<10^{-8}$ <1 fault<br>at 1 x $10^8$ operations | $<10^{-8}$ <1 fault<br>at 1 x $10^8$ operations | $<10^{-8}$ <1 fault<br>at 1 x $10^8$ operations |
| Positively driven contacts to ZH 1/457 | Yes | — | — | — |
| **Short-Circuit Rating without Welding** | | | | |
| Fuseless | FAZ-B4/1-HI | — | — | FAZ-B4/1-HI |
| Fuse (A gG/gL) | 10 | 10 | 10 | 10 |
| **Terminal Capacity** | | | | |
| Solid or flexible conductor with ferrule ($mm^2$) | 0.75–2.5 | 0.75–1.5 | 0.75–1.5 | 0.75–2.5 |
| Solid or stranded (AWG) | 18–14 | 18–16 | 18–16 | 18–14 |

## Undervoltage Release

| Description | XTPAXUVR_ |
|---|---|
| **Cross-Section** | |
| Solid or flexible conductor with ferrule ($mm^2$) | 1 x (0.75–2.5)<br>2 x (0.75–2.5) |
| Solid or stranded (AWG) | 1 x (18–14)<br>2 x (18–14) |
| **Main Contact** | |
| Rated operational voltage, $U_e$ (Vac) | 42–480 |
| Rated operational voltage, $U_e$ (Vdc) | 24–250 |
| Pickup voltage, x $U_s$ | 0.85–1.1 |
| Dropout voltage, x $U_s$ | 0.7–0.35 |
| **Power Consumption** | |
| Pickup AC (VA) | 5 |
| Sealing AC (VA) | 3 |

## Current Limiter

| Description | XTPAXCL |
|---|---|
| Rated impulse withstand voltage ($U_{imp}$), Vac | 6000 |
| Overvoltage category/pollution degree | III/3 |
| Rated operational voltage, $U_e$ (Vac) | 690 |
| Rated interrupted current = Rated operational current ($I_u = I_e$) in amperes | 63 |

## XTPB, XTPR Single- and Two-Pole Circuits with DC and AC Current

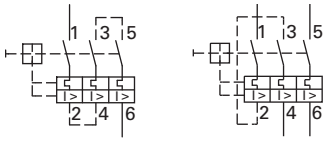


## Protection of PVC Insulated Cables Against Thermal Overload at Short-Circuit

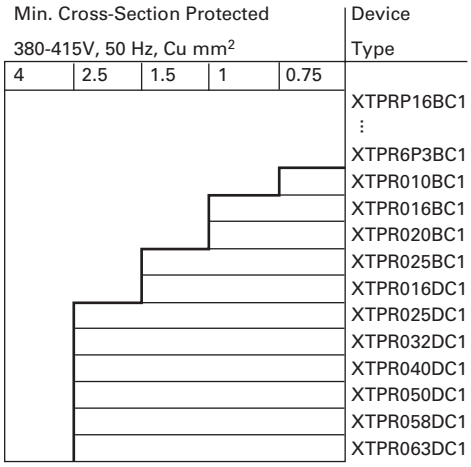


The chart above indicates which minimum cable cross-sections are protected by XTPR motor protective circuit breakers up to their rated conditional short-circuit current $I_q$.

## Shunt Release

| Description | XTPAXSR __ |
|---|---|
| **Cross-Section** | |
| Solid or flexible conductor with ferrule ($mm^2$) | 1 x (0.75–2.5)<br>2 x (0.75–2.5) |
| Solid or stranded (AWG) | 1 x (18–14)<br>2 x (18–14) |
| **Main Contact** | |
| Rated operational voltage, $U_e$ (Vac) | 42–480 |
| Rated operational voltage, $U_e$ (Vdc) | 24–250 |
| AC operating range, x $U_s$ | 0.7–1.1 |
| DC operating range, x $U_s$ (intermittent operation 5s) | 0.7–1.1 |
| **Power Consumption** | |
| Pickup AC (VA) | 5 |
| Sealing AC (VA) | 3 |
| Pickup DC (VA) | 3 |
| Sealing DC (VA) | 3 |

## Wiring Diagrams

### *Fuseless Installation with XTPR*

#### Backup Protection Diagram—XTPR...B

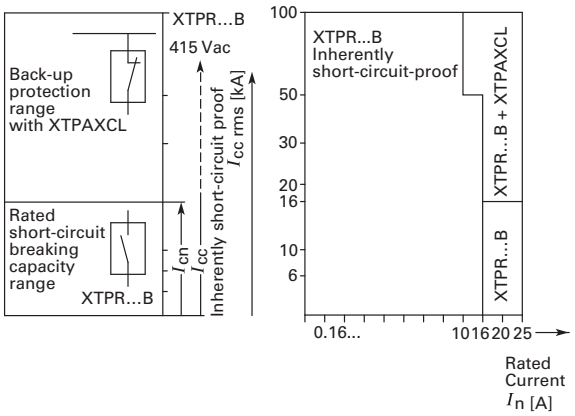


#### Backup Protection Diagram—XTPR...D

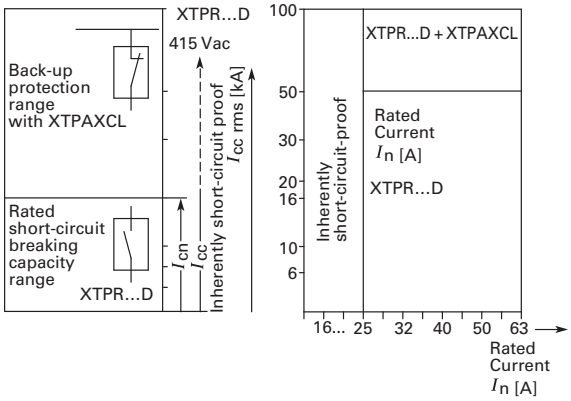


## Time/Current Curves

### *Characteristics*

The time/current characteristic, the current limiting characteristics and the $I^2t$ characteristics were determined in accordance with DIN VDE 0660 and IEC 60 947.

The tripping characteristic of the **inverse-time delayed overload releases** (thermal overload releases or "a" releases) for DC and AC with a frequency of 0 to 400 Hz also apply to the time/current characteristic.

The characteristics apply to the cold state. At operating temperature, the tripping times of the thermal releases are reduced to approximately 25%.

Under normal operating conditions, all three-poles of the device must be loaded. The three main conducting paths must be connected in series in order to protect single-phase or DC loads.

With three-pole loading, the maximum deviation in the tripping time for 3 times the setting current and upwards is ±20% and thus in accordance with DIN VDE 0165.

The tripping characteristics for the instantaneous, electromagnetic overcurrent releases (short-circuit releases or "n" releases) are based on the rated current $I_n$, which is also the maximum value of the setting range for circuit breakers with adjustable overload releases. If the current is set to a lower value, the tripping current of the "n" release is increased by a corresponding factor.

The characteristics of the electromagnetic overcurrent releases apply to frequencies of 50/60 Hz. Appropriate correction factors must be used for lower frequencies up to 16-2/3 Hz, for higher frequencies up to 400 Hz and for DC.

Time/current characteristics, current limiting characteristics and $I^2t$ characteristics are available on request.

### *MMP Tripping Characteristics*

#### XTPB, XTPR Frame B

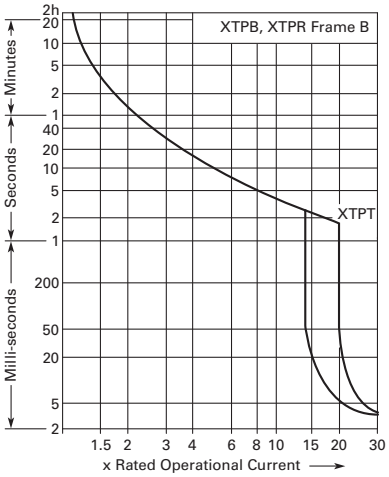


#### XTPR Frame D

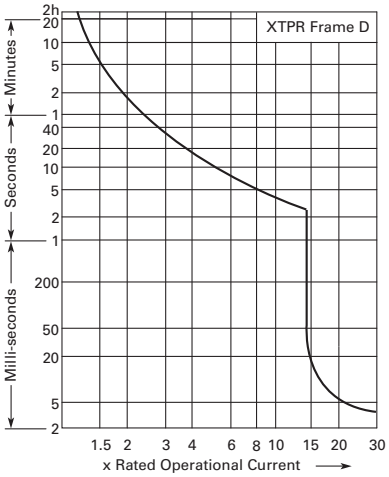

1

### *MMP Let-Through Tripping Characteristics*

#### XTPB, XTPR Frame B

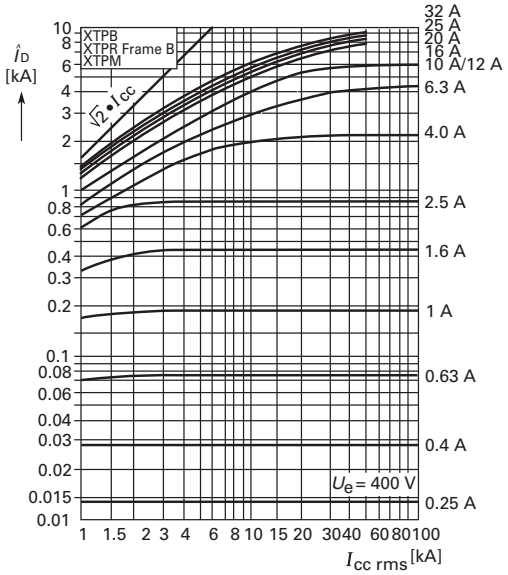


#### XTPR Frame D

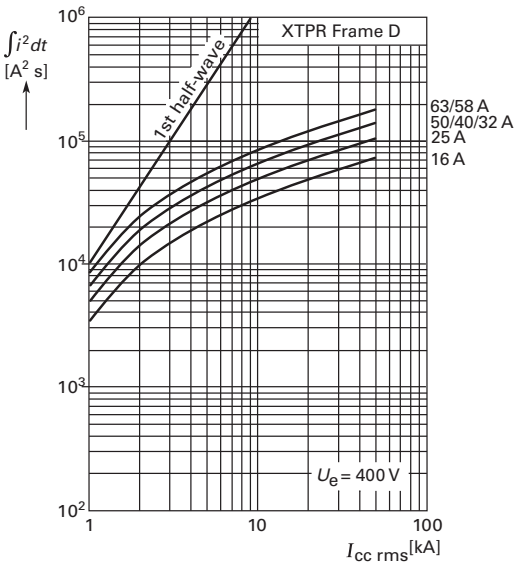


#### XTPR Frame D

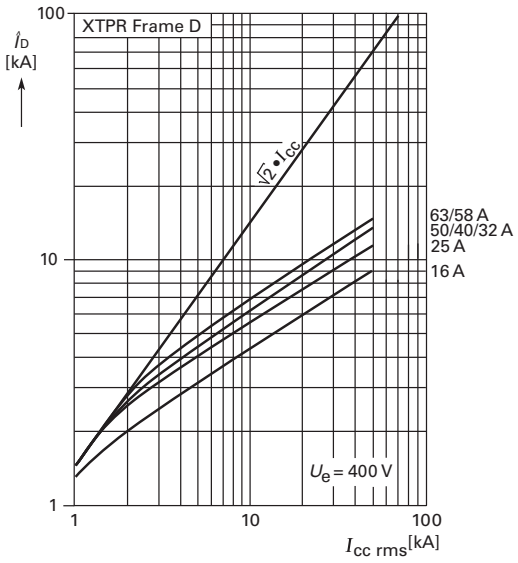

### *Manual Motor Protector Short-Circuit Ratings*

Rated uninterrupted current $I_u$ = Rated operational current $I_e$.
Rated conditional short-circuit current $I_q$—IEC/EN 60947-4-1.
Rated ultimate short-circuit breaking capacity $I_{cu}$— IEC/EN 60947-2.
Rated operational short-circuit breaking capacity $I_{cs}$— IEC/EN 60947-2.

## Global Use, IEC/EN 60947—XTPB with Classification Type "1" and Type "2"

| | 230V | | | | 400V | | | | 440V | | | | 500V | | | | 690V | | | |
|---|---|---|---|---|---|---|---|---|---|---|---|---|---|---|---|---|---|---|---|---|
| $I_u$ | $I_q$ | $I_{cu}$ | $I_{cs}$ | Fuse ①② | $I_q$ | $I_{cu}$ | $I_{cs}$ | Fuse ①② | $I_q$ | $I_{cu}$ | $I_{cs}$ | Fuse ①② | $I_q$ | $I_{cu}$ | $I_{cs}$ | Fuse ①② | $I_q$ | $I_{cu}$ | $I_{cs}$ | Fuse ①② |
| A | kA | kA | kA | A | kA | kA | kA | A | kA | kA | kA | A | kA | kA | kA | A | kA | kA | kA | A |
| 0.16–1 | 50 | 50 | 50 | 50 | 50 | 50 | 50 | 50 | 50 | 50 | 50 | 50 | — | — | — | — | — | — | — | — |
| 1.6 | 50 | 50 | 50 | 50 | 50 | 50 | 50 | 50 | 50 | 50 | 50 | 50 | — | — | — | — | — | — | — | — |
| 2.5 | 50 | 50 | 50 | 50 | 50 | 50 | 50 | 50 | 50 | 50 | 50 | 50 | — | — | — | — | — | — | — | — |
| 4 | 50 | 50 | 50 | 50 | 50 | 50 | 50 | 50 | 50 | 50 | 50 | 50 | — | — | — | — | — | — | — | — |
| 6.3 | 50 | 50 | 50 | 50 | 50 | 50 | 50 | 50 | 50 | 50 | 50 | 50 | — | — | — | — | — | — | — | — |
| 10 | 50 | 50 | 50 | 50 | 50 | 50 | 50 | 50 | 42 | 42 | 10 | 50 | — | — | — | — | — | — | — | — |
| 12 | 50 | 50 | 10 | 50 | 50 | 50 | 10 | 50 | 15 | 15 | 10 | 50 | — | — | — | — | — | — | — | — |
| 16 | 50 | 50 | 10 | 50 | 50 | 50 | 10 | 50 | 15 | 15 | 10 | 50 | — | — | — | — | — | — | — | — |
| 20 | 50 | 50 | 10 | 50 | 50 | 50 | 10 | 50 | 10 | 10 | 10 | 50 | — | — | — | — | — | — | — | — |
| 25 | 50 | 50 | 10 | 50 | 50 | 50 | 10 | 50 | 10 | 10 | 10 | 50 | — | — | — | — | — | — | — | — |

## Global Use, IEC/EN 60947—XTPR…BC1 with Classification Type "1" and Type "2"

| | 230V | | | | 400V | | | | 440V | | | | 500V | | | | 690V | | | |
|---|---|---|---|---|---|---|---|---|---|---|---|---|---|---|---|---|---|---|---|---|
| $I_u$ | $I_q$ | $I_{cu}$ | $I_{cs}$ | Fuse ①② | $I_q$ | $I_{cu}$ | $I_{cs}$ | Fuse ①② | $I_q$ | $I_{cu}$ | $I_{cs}$ | Fuse ①② | $I_q$ | $I_{cu}$ | $I_{cs}$ | Fuse ①② | $I_q$ | $I_{cu}$ | $I_{cs}$ | Fuse ①② |
| A | kA | kA | kA | A | kA | kA | kA | A | kA | kA | kA | A | kA | kA | kA | A | kA | kA | kA | A |
| 0.16–1 | 150 ③ | 150 ③ | 150 ③ | N | 150 ③ | 150 ③ | 150 ③ | N | ③ | ③ | ③ | N | ③ | ③ | ③ | N | ③ | ③ | ③ | N |
| 1.6 | 150 ③ | 150 ③ | 150 ③ | N | 150 ③ | 150 ③ | 150 ③ | N | ③ | ③ | ③ | N | ③ | ③ | ③ | N | ③ | ③ | ③ | N |
| 2.5 | 150 ③ | 150 ③ | 150 ③ | N | 150 ③ | 150 ③ | 150 ③ | N | ③ | ③ | ③ | N | ③ | ③ | ③ | N | 5 | 5 | 5 | 50 |
| 4 | 150 ③ | 150 ③ | 150 ③ | N | 150 ③ | 150 ③ | 150 ③ | N | ③ | ③ | ③ | N | ③ | ③ | ③ | N | 3 | 3 | 3 | 50 |
| 6.3 | 150 ③ | 150 ③ | 150 ③ | N | 150 ③ | 150 ③ | 150 ③ | N | ③ | ③ | ③ | N | 42 | 42 | 6 | 50 | 3 | 3 | 2 | 50 |
| 10 | 150 ③ | 150 ③ | 150 ③ | N | 150 ③ | 150 ③ | 150 ③ | N | 42 | 42 | 10 | 50 | 42 | 42 | 6 | 50 | 3 | 3 | 2 | 50 |
| 12 | 50 | 50 | 10 | 50 | 50 | 50 | 10 | 50 | 15 | 15 | 10 | 50 | 15 | 15 | 6 | 50 | 3 | 3 | 2 | 50 |
| 16 | 50 | 50 | 10 | 50 | 50 | 50 | 10 | 50 | 15 | 15 | 10 | 50 | 15 | 15 | 6 | 50 | 3 | 3 | 2 | 50 |
| 20 | 50 | 50 | 10 | 50 | 50 | 50 | 10 | 50 | 15 | 15 | 10 | 50 | 6 | 6 | 6 | 50 | 3 | 3 | 2 | 50 |
| 25 | 50 | 50 | 10 | 50 | 50 | 50 | 10 | 50 | 10 | 10 | 10 | 50 | 6 | 6 | 6 | 50 | 3 | 3 | 2 | 50 |
| 32 | 50 | 50 | 10 | 50 | 50 | 50 | 10 | 50 | 10 | 10 | 10 | 50 | 6 | 6 | 6 | 50 | 3 | 3 | 2 | 50 |

***Notes***

① N = Not required.

② XTPR…BC1, XTPT, XTPM—Required back-up fuse if the short-circuit current exceeds the rated conditional short-circuit current ($I_{cc} > I_q$); XTPB, XTPR…DC1—Fuse (A gG/gL) for enhancing the switching capacity of the motor protective circuit breaker to 100 kA.

③ No upstream protective device required, as it is the auto-protected range (100/150 kA—Frame B, 150 kA—Frame D).

## Global Use, IEC/EN 60947—XTPR…DC1 with Classification Type "1" and Type "2"

| | 230V | | | | 400V | | | | 440V | | | | 500V | | | | 690V | | | |
|---|---|---|---|---|---|---|---|---|---|---|---|---|---|---|---|---|---|---|---|---|
| $I_u$ | $I_q$ | $I_{cu}$ | $I_{cs}$ | Fuse ①② | $I_q$ | $I_{cu}$ | $I_{cs}$ | Fuse ①② | $I_q$ | $I_{cu}$ | $I_{cs}$ | Fuse ①② | $I_q$ | $I_{cu}$ | $I_{cs}$ | Fuse ①② | $I_q$ | $I_{cu}$ | $I_{cs}$ | Fuse ①② |
| A | kA | kA | kA | A | kA | kA | kA | A | kA | kA | kA | A | kA | kA | kA | A | kA | kA | kA | A |
| 16 | 150 ③ | 150 ③ | 25 | N | 150 ③ | 150 ③ | 25 | N | 45 | 45 | 25 | 100 | 15 | 15 | | 100 | 8 | 8 | 2.5 | 100 |
| 25 | 150 ③ | 150 ③ | 25 | N | 150 ③ | 150 ③ | 25 | N | 45 | 45 | 25 | 100 | 15 | 15 | | 100 | 8 | 8 | 2.5 | 100 |
| 32 | 50 | 50 | 25 | 100 | 50 | 50 | 25 | 100 | 45 | 45 | 25 | 100 | 15 | 15 | | 100 | 5 | 5 | 2.5 | 100 |
| 40 | 50 | 50 | 25 | 100 | 50 | 50 | 25 | 100 | 45 | 45 | 25 | 100 | 15 | 15 | | 100 | 5 | 5 | 2.5 | 100 |
| 50 | 50 | 50 | 25 | 100 | 50 | 50 | 25 | 100 | 45 | 45 | 25 | 100 | 15 | 15 | | 100 | 5 | 5 | 2.5 | 100 |
| 58 | 50 | 50 | 25 | 160 | 50 | 50 | 25 | 160 | 45 | 45 | 25 | 160 | 15 | 15 | | 160 | 5 | 5 | 2.5 | 160 |
| 63 | 50 | 50 | 25 | 160 | 50 | 50 | 25 | 160 | 45 | 45 | 25 | 160 | 15 | 15 | | 160 | 5 | 5 | 2.5 | 160 |

***Ratings for Group Motor Applications***

## UL 508/CSA C22.2 No. 14—XTPB—Frame B, Manual Motor Protector with Thermal and Magnetic Trip

| Catalog Number | Rated Uninterrupted Current—$I_u$ (Amps) | FLA Adjustment Range/Overload Release—$I_r$ (Amps) | Short Circuit Release—$I_{rm}$ (Amps) | Maximum Protective Device for UL/CSA Group Protection | | | | | |
|---|---|---|---|---|---|---|---|---|---|
| | | | | Maximum rms Sym Current—480V (kA) | w/Current Limiter—XTPAXCL | Maximum Fuse Rating (A) | w/Current Limiter—XTPAXCL | Circuit Breaker Maximum (A) | w/Current Limiter—XTPAXCL |
| **XTPBP16BC1** | 0.16 | 0.1–0.16 | 2.2 | 50 | — | 600 | — | 600 | — |
| **XTPBP25BC1** | 0.25 | 0.16–0.25 | 3.5 | 50 | — | 600 | — | 600 | — |
| **XTPBP40BC1** | 0.4 | 0.25–0.4 | 5.6 | 50 | — | 600 | — | 600 | — |
| **XTPBP63BC1** | 0.63 | 0.4–0.63 | 8.8 | 50 | — | 600 | — | 600 | — |
| **XTPB001BC1** | 1 | 0.63–1 | 14 | 50 | — | 600 | — | 600 | — |
| **XTPB1P6BC1** | 1.6 | 1–1.6 | 22 | 50 | — | 600 | — | 600 | — |
| **XTPB2P5BC1** | 2.5 | 1.6–2.5 | 35 | 50 | — | 600 | — | 600 | — |
| **XTPB004BC1** | 4 | 2.5–4 | 56 | 50 | — | 600 | — | 600 | — |
| **XTPB6P3BC1** | 6.3 | 4–6.3 | 88 | 50 | — | 600 | — | 600 | — |
| **XTPB010BC1** | 10 | 6.3–10 | 140 | 30 | 50 | 600 | 600 | 600 | 600 |
| **XTPB012BC1** | 12 | 8–12 | 168 | 10 | 50 | 150 | 600 | 125 ⑤ | 600 |
| **XTPB016BC1** | 16 | 10–16 | 224 | 10 | 50 | 150 | 600 | 125 ⑤ | 600 |
| **XTPB020BC1** ④ | 20 | 16–20 | 280 | 10 | 18 | 150 | 600 | 125 | 600 |
| **XTPB025BC1** ④ | 25 | 20–25 | 350 | 10 | 18 | 150 | 600 | 125 | 600 |

***Notes***

① N = Not required.

② XTPR…BC1, XTPT, XTPM—Required back-up fuse if the short-circuit current exceeds the rated conditional short-circuit current ($I_{cc} > I_q$); XTPB, XTPR…DC1—Fuse (A gG/gL) for enhancing the switching capacity of the motor protective circuit breaker to 100 kA.

③ No upstream protective device required, as it is the auto-protected range (100/150 kA—Frame B, 150 kA—Frame D).

④ IEC/EN 60947-4-1.

⑤ 22 kA 600 Vac.

## UL 508/CSA C22.2 No. 14—XTPR—Frame B (all Screw and Spring Cage Terminal Options), Manual Motor Protector with Thermal and Magnetic Trip

| Catalog Number | Rated Uninterrupted Current—$I_u$ (Amps) | FLA Adjustment Range/Overload Release—$I_r$ (Amps) | Short Circuit Release—$I_{rm}$ (Amps) | Maximum Protective Device for UL/CSA Group Protection | | | | | |
|---|---|---|---|---|---|---|---|---|---|
| | | | | Maximum rms Sym Current—480V (kA) | w/Current Limiter—XTPAXCL | Maximum Fuse Rating (A) | w/Current Limiter—XTPAXCL | Circuit Breaker Maximum (A) | w/Current Limiter—XTPAXCL |
| **XTPRP16BC1** | 0.16 | 0.1–0.16 | 2.2 | 50 | — | 600 | — | 600 | — |
| **XTPRP25BC1** | 0.25 | 0.16–0.25 | 3.5 | 50 | — | 600 | — | 600 | — |
| **XTPRP40BC1** | 0.4 | 0.25–0.4 | 5.6 | 50 | — | 600 | — | 600 | — |
| **XTPRP63BC1** | 0.63 | 0.4–0.63 | 8.8 | 50 | — | 600 | — | 600 | — |
| **XTPR001BC1** | 1 | 0.63–1 | 14 | 50 | — | 600 | — | 600 | — |
| **XTPR1P6BC1** | 1.6 | 1–1.6 | 22 | 50 | — | 600 | — | 600 | — |
| **XTPR2P5BC1** | 2.5 | 1.6–2.5 | 35 | 50 | — | 600 | — | 600 | — |
| **XTPR004BC1** | 4 | 2.5–4 | 56 | 50 | — | 600 | — | 600 | — |
| **XTPR6P3BC1** | 6.3 | 4–6.3 | 88 | 50 | — | 600 | — | 600 | — |
| **XTPR010BC1** | 10 | 6.3–10 | 140 | 30 | 50 | 600 | 600 | 600 | 600 |
| **XTPR012BC1** | 12 | 8–12 | 168 | 10 | 50 | 150 | 600 | 125 | 600 |
| **XTPR016BC1** | 16 | 10–16 | 224 | 10 | 50 | 150 | 600 | 125 ① | 600 |
| **XTPR032BC1** | 32 | 25–32 | 448 | 10 | 18 | 150 | 600 | 125 | 600 |
| **XTPR025BC1** | 25 | 20–25 | 350 | 10 | 18 | 150 | 600 | 125 | 600 |
| **XTPR032BC1** | 32 | 25–32 | 448 | 10 | 18 | 150 | 600 | 125 | 600 |

## UL 508/CSA C22.2 No. 14—XTPR—Frame D, Manual Motor Protector with Thermal and Magnetic Trip

| Catalog Number | Rated Uninterrupted Current—$I_u$ (Amps) | FLA Adjustment Range/Overload Release—$I_r$ (Amps) | Short Circuit Release—$I_{rm}$ (Amps) | Maximum Protective Device for UL/CSA Group Protection | | | | | |
|---|---|---|---|---|---|---|---|---|---|
| | | | | Maximum rms Sym Current—480V (kA) | w/Current Limiter—XTPAXCL | Maximum Fuse Rating (A) | w/Current Limiter—XTPAXCL | Circuit Breaker Maximum (A) | w/Current Limiter—XTPAXCL |
| **XTPR016DC1** | 16 | 10–16 | 224 | 65 | — | 600 | — | 600 | — |
| **XTPR025DC1** | 25 | 16–25 | 350 | 65 | — | 600 | — | 600 | — |
| **XTPR032DC1** | 32 | 25–32 | 448 | 65 | — | 600 | — | 600 | — |
| **XTPR040DC1** | 40 | 32–40 | 560 | 65 | — | 600 | — | 600 | — |
| **XTPR050DC1** | 50 | 40–50 | 700 | 65 | — | 600 | — | 600 | — |
| **XTPR058DC1** | 58 | 50–58 | 812 | 65 | — | 600 | — | 600 | — |
| **XTPR063DC1** | 65 | 55–63 | 882 | 65 | — | 600 | — | 600 | — |

***Note***

① 22 kA 600 Vac.

## UL 508 Type E Ratings—XTPR Frame B + XTPAXLSA

| Manual Motor Protector—Screw Terminal Catalog Number | Line Side Adapter Catalog Number | FLA Adjustment Range/Overload Release—$I_r$ (Amps) | Short Circuit Release—$I_{rm}$ (Amps) | UL 508 Type E Application Maximum rms Symmetrical Short-Circuit Ratings (kA) 480/277V | 600/347V | Maximum Upstream Protective Device (A) ① Maximum Fuse 600V | Maximum Circuit Breaker 600V |
|---|---|---|---|---|---|---|---|
| **XTPRP16BB1** | **XTPAXLSA** | 0.1–0.16 | 2.2 | 50 | 50 | Not required | Not required |
| **XTPRP25BC1** | **XTPAXLSA** | 0.16–0.25 | 3.5 | 50 | 50 | Not required | Not required |
| **XTPRP40BC1** | **XTPAXLSA** | 0.25–0.4 | 5.6 | 50 | 50 | Not required | Not required |
| **XTPRP63BC1** | **XTPAXLSA** | 0.4–0.63 | 8.82 | 50 | 50 | Not required | Not required |
| **XTPR001BC1** | **XTPAXLSA** | 0.63–1 | 14 | 50 | 50 | Not required | Not required |
| **XTPR1P6BC1** | **XTPAXLSA** | 1–1.6 | 22.4 | 50 | 50 | Not required | Not required |
| **XTPR2P5BC1** | **XTPAXLSA** | 1.6–2.5 | 35 | 50 | 50 | Not required | Not required |
| **XTPR004BC1** | **XTPAXLSA** | 2.5–4 | 56 | 50 | 50 | Not required | Not required |
| **XTPR6P3BC1** | **XTPAXLSA** | 4–6.3 | 88.2 | 65 | 50 | Not required | Not required |
| **XTPR010BC1** | **XTPAXLSA** | 6.3–10 | 140 | 65 | 50 | Not required | Not required |
| **XTPR012BC1** | **XTPAXLSA** | 8–12 | 168 | 65 | — | Not required | Not required |
| **XTPR016BC1** | **XTPAXLSA** | 10–16 | 224 | 42 | — | Not required | Not required |
| **XTPR020BC1** | **XTPAXLSA** | 16–20 | 280 | 18 | — | Not required | Not required |
| **XTPR025BC1** | **XTPAXLSA** | 20–25 | 350 | 18 | — | Not required | Not required |
| **XTPR032BC1** | **XTPAXLSA** | 25–32 | 448 | 18 | — | Not required | Not required |

## UL 508 Type E Ratings—XTPR Frame D + XTPAXLSAD

| Manual Motor Protector—Screw Terminal Catalog Number | Line Side Adapter Catalog Number | FLA Adjustment Range/Overload Release—$I_r$ (Amps) | Short Circuit Release—$I_{rm}$ (Amps) | UL 508 Type E Application Maximum rms Symmetrical Short-Circuit Ratings (kA) 240V | 480/277V | 600/347V | Maximum Upstream Protective Device (A) ① Maximum Fuse 600V | Maximum Circuit Breaker 600V |
|---|---|---|---|---|---|---|---|---|
| **XTPR016DC1** | **XTPAXLSAD** | 10–16 | 224 | 65 | 65 | 25 | Not required | Not required |
| **XTPR025DC1** | **XTPAXLSAD** | 16–25 | 350 | 65 | 65 | 25 | Not required | Not required |
| **XTPR032DC1** | **XTPAXLSAD** | 25–32 | 448 | 65 | 65 | 25 | Not required | Not required |
| **XTPR040DC1** | **XTPAXLSAD** | 32–40 | 560 | 65 | 65 | 25 | Not required | Not required |
| **XTPR050DC1** | **XTPAXLSAD** | 40–50 | 700 | 65 | 65 | — | Not required | Not required |
| **XTPR058DC1** | **XTPAXLSAD** | 50–58 | 812 | 65 | 65 | — | Not required | Not required |
| **XTPR063DC1** | **XTPAXLSAD** | 55–65 | 882 | 65 | 65 | — | Not required | Not required |

***Note***

① For UL 508 Type E applications, the manual motor protector assembly does not require a dedicated upstream protective device in the panel, thus a maximum rating is not required.

## Dimensions

Approximate Dimensions in mm [in]

### Manual Motor Protectors—XTPB

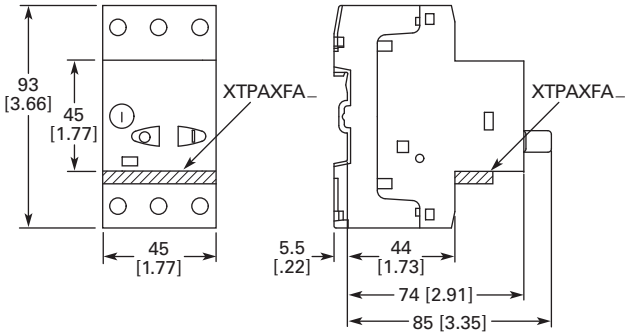


### Manual Motor Protectors, Manual Transformer Protectors—XTPR...B

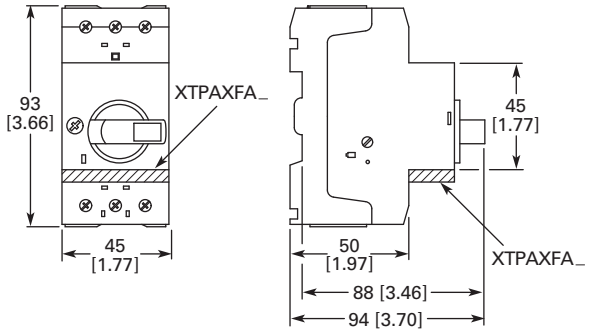


### Manual Motor Protector—XTPR...DC1

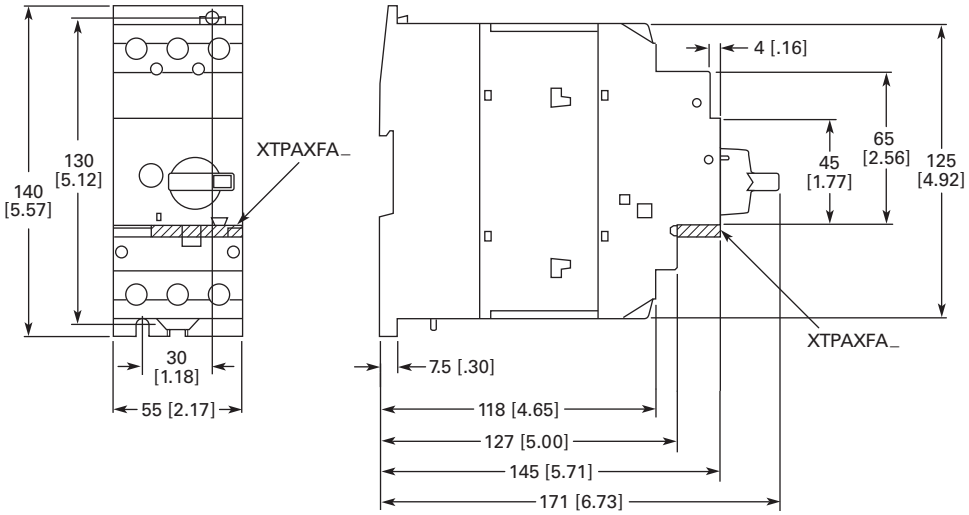


### Current Limiter—XTPAXCL

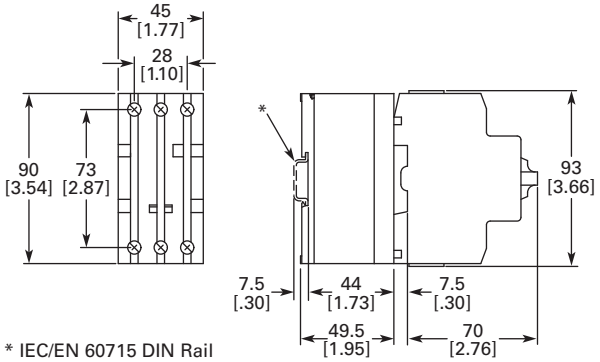


* IEC/EN 60715 DIN Rail

### MMPs with Early-Make Auxiliary Contacts—XTPR...BC1 + XTPAXFAEM20

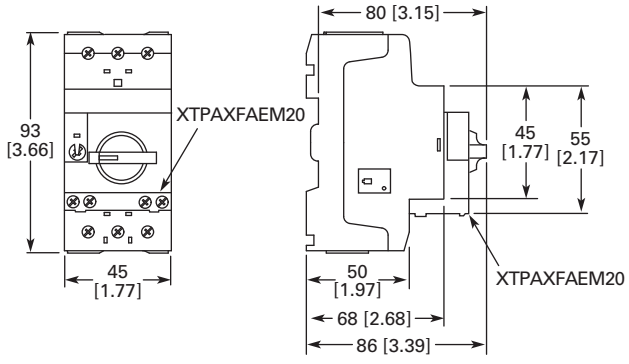

Approximate Dimensions in mm [in]

### Standard Auxiliary Contact—XTPAXSA_

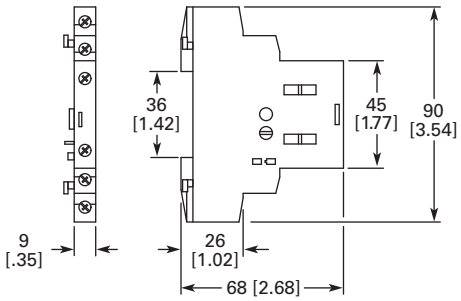


### Trip Indicating Auxiliary Contact—XTPAXSATR_

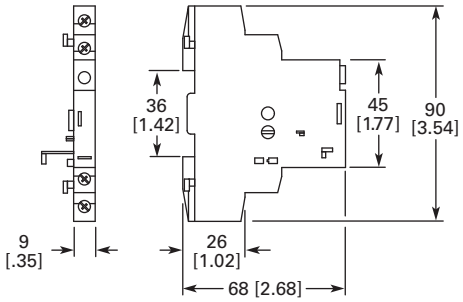


### Undervoltage/Shunt Release—XTPAXUVR_, XTPAXSR_

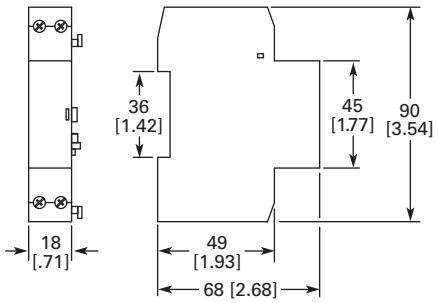


### Three-Phase Commoning Link—XTPAXCLKA4, XTPAXCLKA2

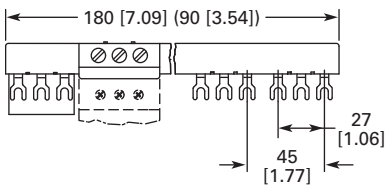


### Three-Phase Commoning Link—XTPAXCLKB5, XTPAXCLKB4, XTPAXCLKB3 and XTPAXCLKB2

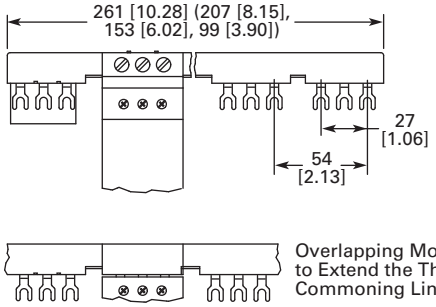


### Three-Phase Commoning Link—XTPAXCLKC4, XTPAXCLKC2

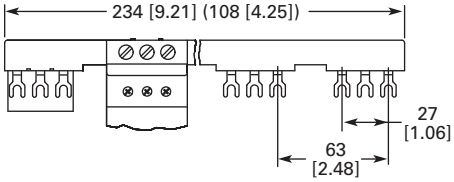


### Incoming Terminal, Line Side Adapter—XTPAXIT, XTPAXLSA

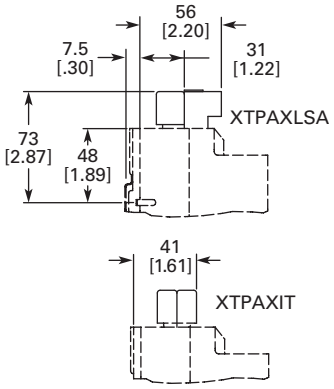

Approximate Dimensions in mm [in]

***Three-Phase Commoning Link***

### XTPAXCLKA4D, XTPAXCLKA3D and XTPAXCLKA2D

#### XTPAXCLKA4D

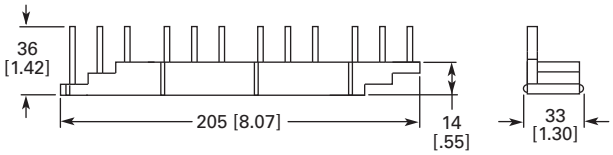


#### XTPAXCLKA3D

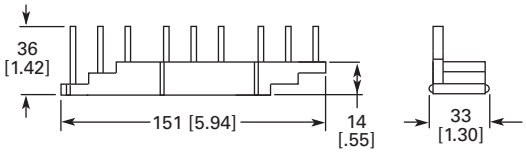


#### XTPAXCLKA2D

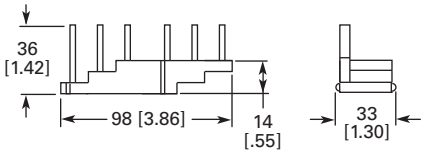


### XTPAXCLKB4D, XTPAXCLKB3D and XTPAXCLKB2D

#### XTPAXCLKB4D

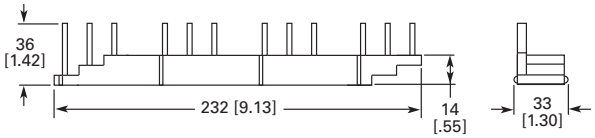


#### XTPAXCLKB3D

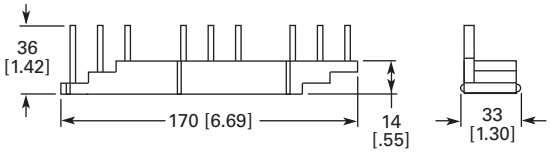


#### XTPAXCLKB2D

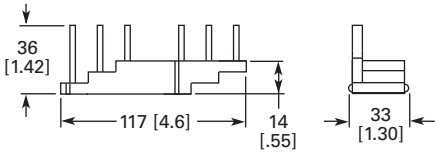


### XTPAXCLKC4D and XTPAXCLKC2D

#### XTPAXCLKC4D

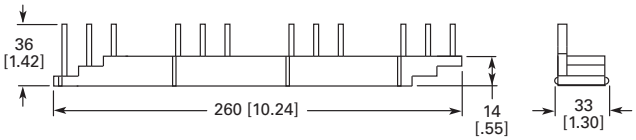


#### XTPAXCLKC2D

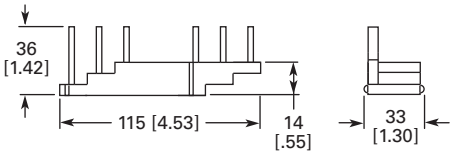

Approximate Dimensions in mm [in]

## Insulated Enclosures for Surface Mounting of XTPB Manual Motor Protectors

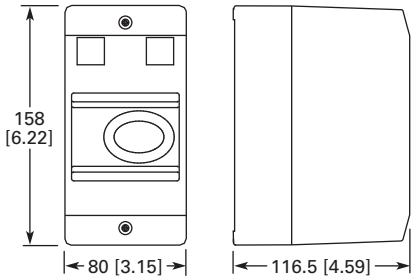


**XTPBXENCS40, XTPBXENCS65, XTPBXENAS41, XTPBXENAS65**

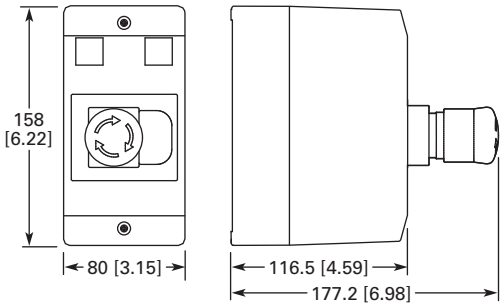


**XTPBXENCSEK65, XTPBXENCSES65, XTPBXENASEK65, XTPBXENASES65**

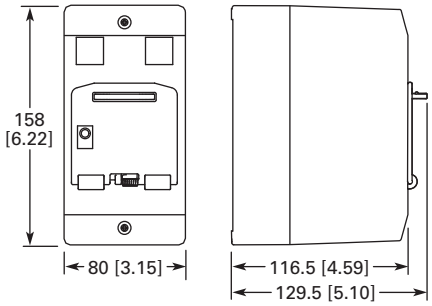


**XTPBXENCSLE65, XTPBXENCSLO65, XTPBXENASLE65, XTPBXENASO065**

## Insulated Enclosures for Flush Mounting of XTPB Manual Motor Protectors

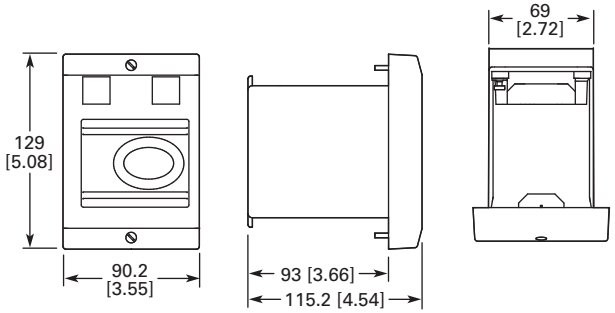


**XTPBXENCF40, XTPBXENCF55**

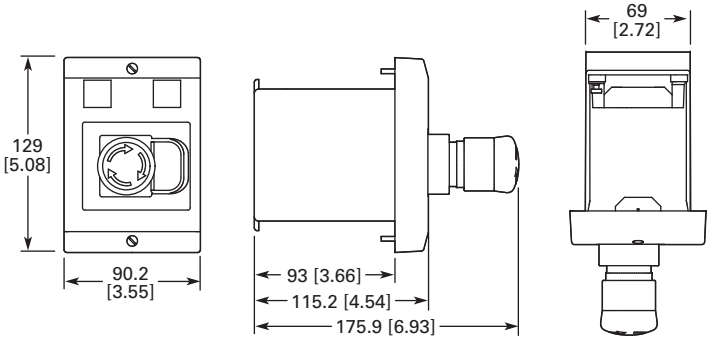


**XTPBXENCFEK55, XTPBXENCFES55**

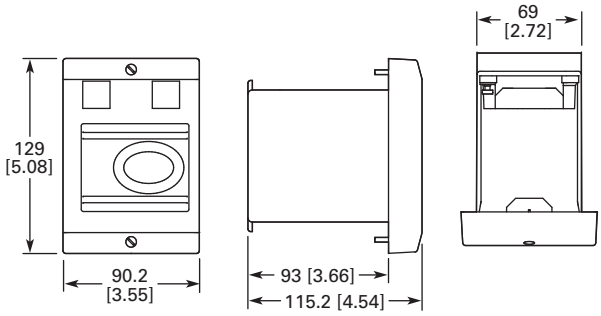


**XTPBXENCFLE55, XTPBXENCFLO55**

Approximate Dimensions in mm [in]

## Insulated Enclosures for Surface Mounting of XTPR…B Manual Motor Protectors

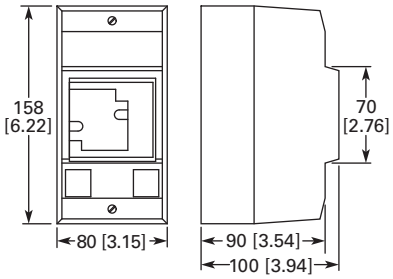


**XTPAXENCS40**

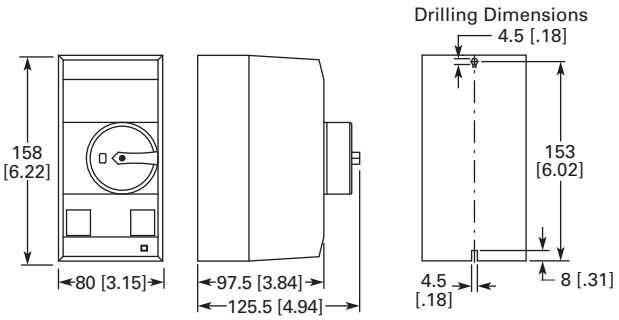


**XTPAXENCS55B, XTPAXENCS55RY, XTPAXENCSEM55B, XTPAXENCSEM55RY**

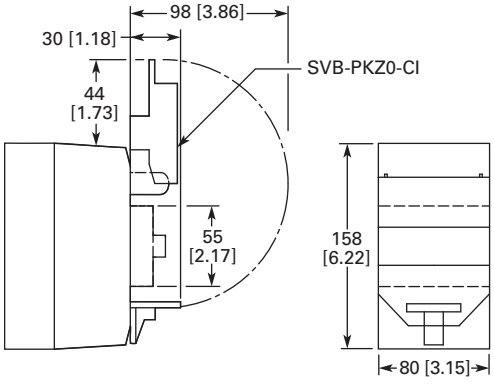


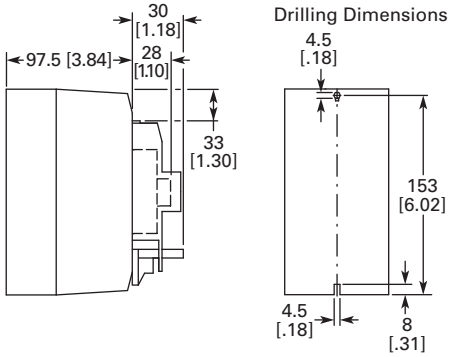





**XTPAXENCS55_ + XTPAXPL1, XTPAXENCSEM55_ + XTPAXPL1**

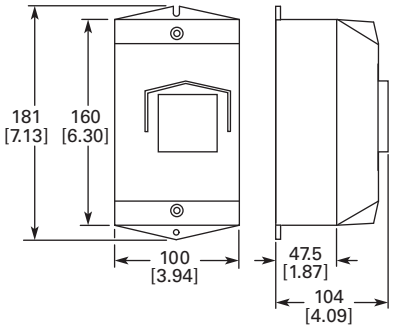


**XTPAXENCSH41, XTPAXENCS41, XTPAXENAS41**

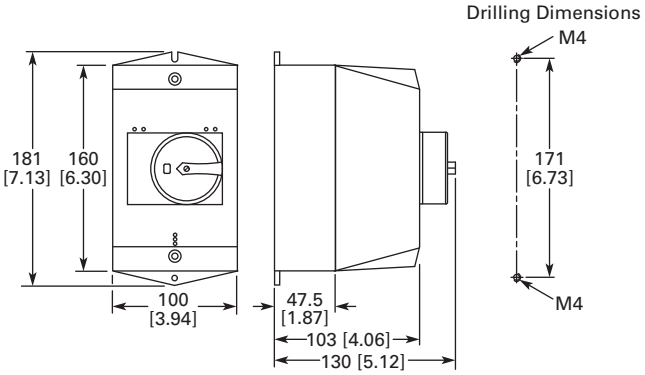


**XTPAXENCS65B, XTPAXENCS65RY, XTPAXENCSEM65B, XTPAXENCSEM65RY, XTPAXENAS55B, XTPAXENAS55RY, XTPAXENASEM55B, XTPAXENASEM55RY, XTPAXENCSH65B, XTPAXENCSH65RY, XTPAXENCSEMH65B, XTPAXENCSEMH65RY**

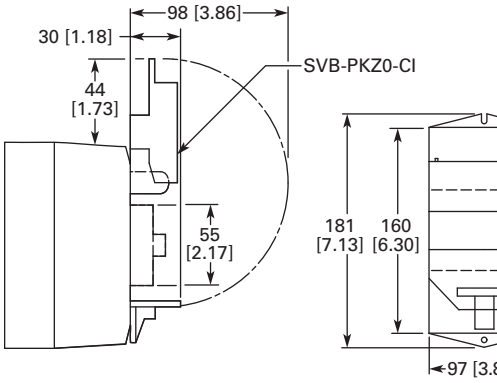


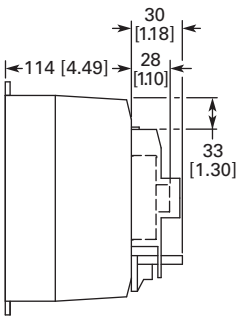


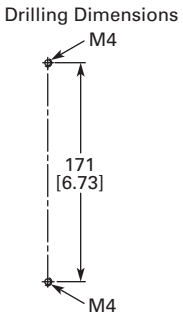


**XTPAXENCS65_ + XTPAXPL1, XTPAXENCSEM65_ + XTPAXPL1**

1

Approximate Dimensions in mm [in]

## Insulated Enclosures for Flush Mounting of XTPR…B Manual Motor Protectors

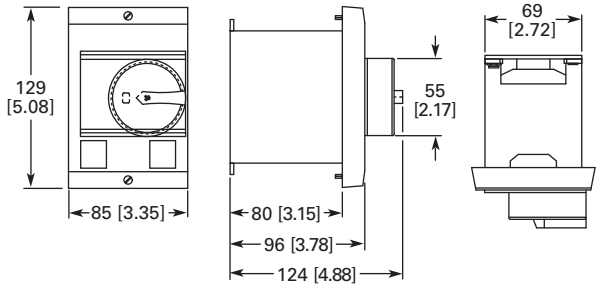


**XTPAXENCF40, XTPAXENCF55B, XTPAXENCF55RY**

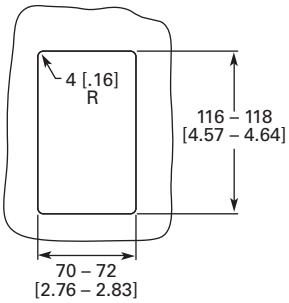


**Mounting Cutout XTPAXENCF_**

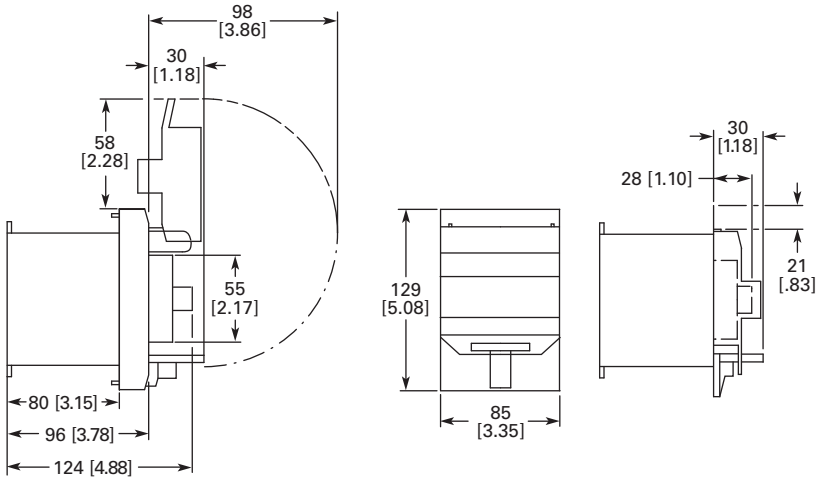


**XTPAXENCF55_ + XTPAXPL3**

Approximate Dimensions in mm [in]

## Insulated Enclosures for Surface Mounting of XTPR...D Manual Motor Protectors

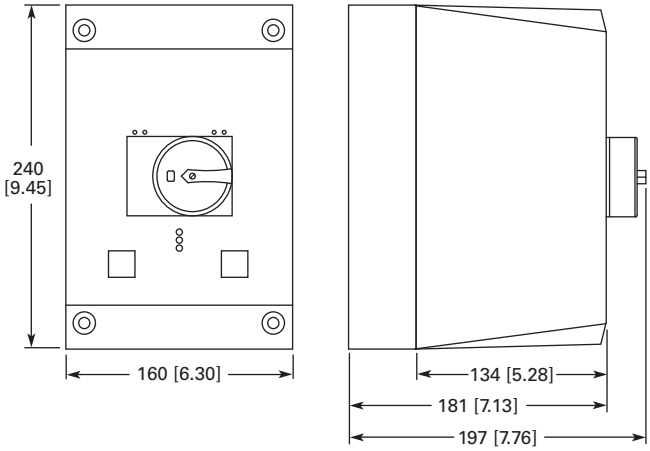


**XTPAXENCSD65B, XTPAXENCSD65RY**

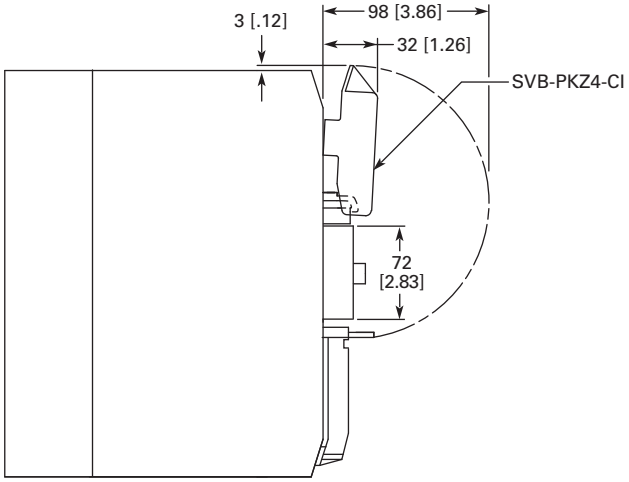


**XTPAXENCSD65_ + XTPAXPL2**

Drilling Dimensions

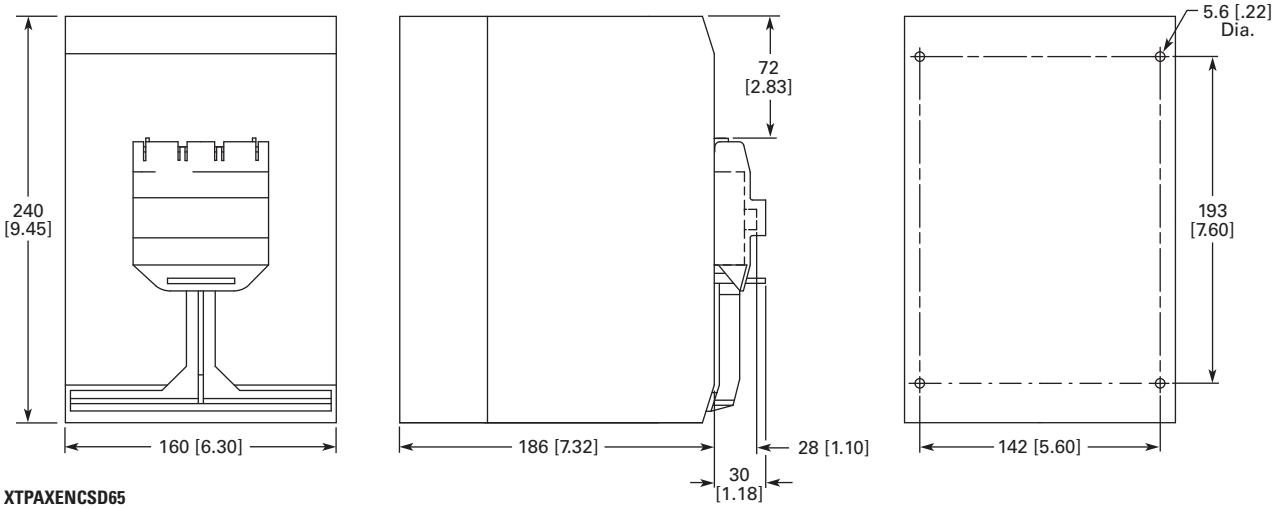


**XTPAXENCSD65**

## Rotary Handle Mechanism—XTPAXRHM_

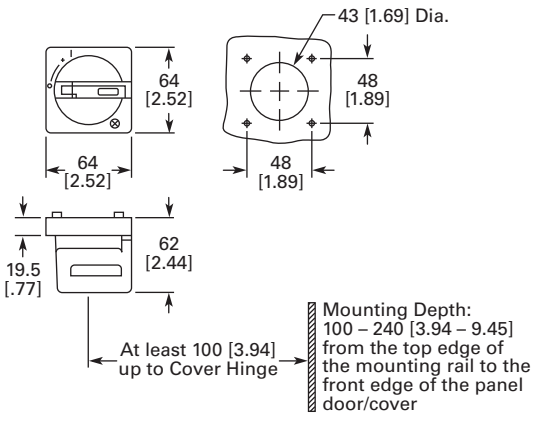

Approximate Dimensions in mm [in]

***Pushbutton MMP Enclosures***

## Insulated Enclosures for Surface Mounting

### XTPB Pushbutton Motor-Protective Circuit Breakers

| Catalog Number | H x W x D |
|---|---|
| **Global Usage** | |
| **XTPBXENCS40** | 158 x 80 x 116.5 [6.22 x 3.15 x 4.59] |
| **XTPBXENCS65** | 158 x 80 x 116.5 [6.22 x 3.15 x 4.59] |
| **XTPBXENCSLO65** | 158 x 80 x 129.5 [6.22 x 3.15 x 5.10] |
| **XTPBXENCSLE65** | 158 x 80 x 129.5 [6.22 x 3.15 x 5.10] |
| **XTPBXENCSES65** | 158 x 80 x 177.2 [6.22 x 3.15 x 6.98] |
| **XTPBXENCSEK65** | 158 x 80 x 177.2 [6.22 x 3.15 x 6.98] |

### XTPB Pushbutton Manual Motor Protectors

| Catalog Number | H x W x D |
|---|---|
| **North American Usage** | |
| **XTPBXENAS41** | 158 x 80 x 116.5 [6.22 x 3.15 x 4.59] |
| **XTPBXENAS65** | 158 x 80 x 116.5 [6.22 x 3.15 x 4.59] |
| **XTPBXENASLO65** | 158 x 80 x 129.5 [6.22 x 3.15 x 5.10] |
| **XTPBXENASLE65** | 158 x 80 x 129.5 [6.22 x 3.15 x 5.10] |
| **XTPBXENASES65** | 158 x 80 x 177.2 [6.22 x 3.15 x 6.98] |
| **XTPBXENASEK65** | 158 x 80 x 177.2 [6.22 x 3.15 x 6.98] |

### Frame B (0.1–32A) XTPR Motor-Protective Circuit Breakers

| Catalog Number | H x W x D |
|---|---|
| **Global Usage** | |
| **XTPAXENCS41** | 160 x 100 x 104 [6.30 x 3.94 x 4.09] |
| **XTPAXENCS65B** | 160 x 100 x 130 [6.30 x 3.94 x 5.12] |
| **XTPAXENCS65RY** | 160 x 100 x 130 [6.30 x 3.94 x 5.12] |
| **XTPAXENCS40** | 158 x 80 x 100 [6.22 x 3.15 x 3.94] |
| **XTPAXENCS55B** | 158 x 80 x 125.5 [6.22 x 3.15 x 4.94] |
| **XTPAXENCS55RY** | 158 x 80 x 125.5 [6.22 x 3.15 x 4.94] |

### Frame B (0.1–32A) XTPR Rotary Manual Motor Protectors

| Catalog Number | H x W x D |
|---|---|
| **North American Usage** | |
| **XTPAXENAS55B** | 160 x 100 x 130 [6.30 x 3.94 x 5.12] |
| **XTPAXENAS55RY** | 160 x 100 x 130 [6.30 x 3.94 x 5.12] |

### Frame B XTPR (0.1–32A) Rotary Motor-Protective Circuit Breakers with XTPAXFAEM20 Early-Make Front-Mount Auxiliary Contact

| Catalog Number | H x W x D |
|---|---|
| **Global Usage** | |
| **XTPAXENCSEM65B** | 160 x 100 x 130 [6.30 x 3.94 x 5.12] |
| **XTPAXENCSEM65RY** | 160 x 100 x 130 [6.30 x 3.94 x 5.12] |
| **XTPAXENCSEM55B** | 158 x 80 x 100 [6.22 x 3.15 x 3.94] |
| **XTPAXENCSEM55RY** | 158 x 80 x 100 [6.22 x 3.15 x 3.94] |

### Frame B XTPR (0.1–32A) Rotary Manual Motor Protectors with XTPAXFAEM20 Early-Make Front-Mount Auxiliary Contact

| Catalog Number | H x W x D |
|---|---|
| **North American Usage** | |
| **XTPAXENCSEM55B** | 160 x 100 x 130 [6.30 x 3.94 x 5.12] |
| **XTPAXENCSEM55RY** | 160 x 100 x 130 [6.30 x 3.94 x 5.12] |

### Frame D (10–65A) Rotary Motor-Protective Circuit Breakers

| Catalog Number | H x W x D |
|---|---|
| **Global and North American Usage** | |
| **XTPAXENCSD65B** | 240 x 160 x 197 [9.45 x 6.30 x 7.76] |
| **XTPAXENCSD65RY** | 240 x 160 x 197 [9.45 x 6.30 x 7.76] |

## Insulated Enclosures for Flush Mounting

### XTPB Pushbutton Manual Motor Protectors

| Catalog Number | H x W x D |
|---|---|
| **Global and North American Usage** | |
| **XTPBXENCF40** | 129 x 90.2 x 115.2 [5.08 x 3.55 x 4.54] |
| **XTPBXENCF55** | 129 x 90.2 x 115.2 [5.08 x 3.55 x 4.54] |
| **XTPBXENCFLO55** | 129 x 90.2 x 115.2 [5.08 x 3.55 x 4.54] |
| **XTPBXENCFLE55** | 129 x 90.2 x 115.2 [5.08 x 3.55 x 4.54] |
| **XTPBXENCFES55** | 129 x 90.2 x 175.9 [5.08 x 3.55 x 6.93] |
| **XTPBXENCFEK55** | 129 x 90.2 x 175.9 [5.08 x 3.55 x 6.93] |

### Frame B (0.1–32A) XTPR Rotary Manual Motor Protectors

| Catalog Number | H x W x D |
|---|---|
| **Global Usage** | |
| **XTPAXENCF40** | 129 x 85 x 96 [5.08 x 3.35 x 3.78] |
| **XTPAXENCF55B** | 129 x 85 x 124 [5.08 x 3.35 x 4.88] |
| **XTPAXENCF55RY** | 129 x 85 x 124 [5.08 x 3.35 x 4.88] |

**Combination Motor Controllers**



## Contents


| *Description* | *Page* |
|---|---|
| Relays and Timers | V5-T1-3 |
| Miniature Controls | V5-T1-18 |
| Contactors and Starters | V5-T1-35 |
| Thermal Overload Relays | V5-T1-128 |
| C440/*XT* Electronic Overload Relay | V5-T1-141 |
| Manual Motor Protectors | V5-T1-157 |
| Combination Motor Controllers | |
| Features | V5-T1-194 |
| Standards and Certifications | V5-T1-194 |
| Catalog Number Selection | V5-T1-195 |
| Product Selection | V5-T1-195 |
| Accessories | V5-T1-203 |
| Technical Data and Specifications | V5-T1-205 |
| Dimensions | V5-T1-211 |
| An Eaton Green Solution | |
| *XT* Electronic Manual Motor Protector | V5-T1-216 |
| EMS—Electronic Motor Starter | V5-T1-229 |
| Reference Data | V5-T1-231 |


## Combination Motor Controllers

### Product Description

Eaton's ***XT*** IEC open non-reversing and reversing manual motor controllers combine a manual motor protector with an IEC contactor(s) to provide a complete motor protection solution by combining motor disconnect function, thermal overload protection, magnetic short-circuit protection and remote control operation in one compact, assembled unit. these assembled manual motor controllers cover motors with FLA ratings from 0.10A to 65A.

The UL 508 Type F labeled combination motor controller (CMC) includes a line side adapter (LSA). These assembled combination motor controllers cover motors with FLA ratings from 0.10A to 65A.

### Application Description

The ***XT*** IEC non-reversing and reversing manual and combination motor controllers can be used in the following applications:

#### *Group Motor Control*

Manual motor controllers (MMCs) are ideal for group motor applications where an upstream breaker or fuse provides protection for two or more motors. ***XT*** manual motor controllers (MMC) combine a manual motor protector, a wiring connector link and IEC contactor.

#### *Individual Branch Circuit for Motor Loads*

Combination motor controller (CMC), consisting of a line side adapter, manual motor protector, wiring connector link and IEC contactor, provide an efficient means to build an entire branch circuit. The ***XT*** CMC is UL 508 Type F approved, meaning it is "self-protected" and doesn't require the use of an additional fuse or breaker for short circuit protection. This approval means CMC's can be used in place of a traditional fuse-starter and breaker-starter motor circuit.

Based around two key functional components (MMP and contactor), the CMC is a very cost effective means to build a branch circuit. Fuses and breakers must be oversized to prevent tripping during motor start up, and thus these oversized devices can no longer protect the motor. To compensate for this, a motor overload relay is necessary to protect the motor.

The manual motor protector was invented in Germany by Moeller to correct this inefficiency. The MMP operates similarly to a circuit breaker, except the inrush (magnetic) protection is set to 14 times the running current, thus accounting for motor start-up current without the necessity to oversize. A overcurrent dial was added to the face of the MMP to serve as the motor overload protection. This "motor protective circuit breaker", as it is referred to in Europe, now accomplishes all four key functions of a motor branch circuit: disconnect, short circuit, motor controller and motor overload protection. With the addition of a contactor, users have the ability to remotely control the starter device.

Whether a single motor application or a multiple motor application, CMC's are an ideal solution for machinery OEMs and panel builders.

1

## Features

- ON/OFF rotary handle with lockout provision
- Visible trip indication
- Test trip function
- Motor applications from 0.10A to 65A
- Class 10 overload protection
- Built-in heater and magnetic trip elements to protect the motor
- Phase loss sensitivity
- Type 2 coordination
- Ambient compensated up to 55°C [140°F]
- Control inputs located at front of starter for easy access and wiring
- Wide range of coils
- DIN rail mount—XTSC…BB_
- Mounting plates—XTSC…BC_, XTSC…D motor controllers
- Adjustment dial for setting motor FLA
- Short-circuit trip at 14 times the maximum setting of the FLA adjustment dial
- UL 508 Type F CMC high fault short-circuit ratings
- 1NO-1NC auxiliary contact as standard on manual motor controller and combination motor controller

## Standards and Certifications

UL 508 Type F combination motor controller

- IEC Type 2 Approved per IEC 60947-4-1
- UL Listed File No. E245398
- CE Mark

**Note:** For Type 2 Coordination of MMCs, see **Page V5-T1-232**. Protection in different controller types

## MMC and CMC Applications

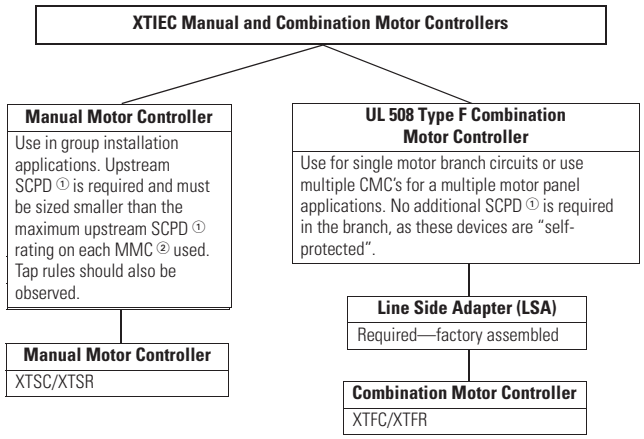


***Notes***

Technical Paper AP03402001E.

Line side adapters are not required for non-U.S. applications. Most countries outside of the U.S. classify the MMP as a motor-protective circuit breaker.

① SCPD = Short-circuit protective device (circuit breaker, fuses).
② MMC = Manual motor controller

## Catalog Number Selection

### Combination Motor Controllers

**XT SC 012 B B A**

| Designation |
|---|
| ***XT*** = ***XT*** IEC power control |

| Type | |
|---|---|
| **SC** | = Manual motor controller—FVNR |
| **SR** | = Manual motor controller—FVR |
| **FC** | = Combination motor controller, UL 508 Type F—FVNR |
| **FR** | = Combination motor controller, UL 508 Type F—FVR |

| Rated Current of MMP | |
|---|---|
| **Frame B** | **Frame D** |
| **P16** = 0.16A | **016** = 16A |
| **P25** = 0.25A | **025** = 25A |
| **P40** = 0.40A | **032** = 32A |
| **P63** = 0.63A | **040** = 40A |
| **001** = 1A | **050** = 50A |
| **1P6** = 1.6A | **058** = 58A |
| **2P5** = 2.5A | **063** = 63A |
| **004** = 4A | |
| **6P3** = 6.3A | |
| **010** = 10A | |
| **012** = 12A | |
| **016** = 16A | |
| **020** = 20A | |
| **025** = 25A | |
| **032** = 32A | |

| Frame Size—MMP |
|---|
| **B** = 45 mm, 0.1 to 32A |
| **D** = 55 mm, 16 to 63A |

| Frame Size—Contactor |
|---|
| **B** = 45 mm, 7 to 15A |
| **C** = 45 mm, 18 to 32A |
| **D** = 55 mm, 40 to 65A |

| Coil Voltage | |
|---|---|
| **A** | = 110V 50 Hz, 120V 60 Hz |
| **B** | = 220V 50 Hz, 240V 60 Hz |
| **C** | = 415V 50 Hz, 480V 60 Hz |
| **D** | = 600V 60 Hz |
| **E** | = 208V 50 Hz |
| **F** | = 230V 50 Hz |
| **G** | = 190V 50 Hz, 220V 60 Hz |
| **H** | = 240V 50 Hz, 277V 60 Hz |
| **L** | = 380V 50 Hz, 440V 60 Hz |
| **N** | = 400V 50 Hz |
| **P** | = 380V 60 Hz |
| **R** | = 12V 50/60 Hz |
| **T** | = 24V 50/60 Hz |
| **W** | = 42V 50 Hz, 48V 60 Hz |
| **Y** | = 48V 50 Hz |
| **AD** | = 120 Vdc |
| **BD** | = 220 Vdc |
| **RD** | = 12 Vdc |
| **TD** | = 24 Vdc |
| **WD** | = 48 Vdc |

## Product Selection

### *XTSC and XTSR Manual Motor Controllers (MMC)/Starter Combinations*

**Frame B MMP + Frame B Contactor**



### Factory-Assembled Manual Motor Controller—Frame B MMP + Frame B Contactor—Maximum UL Ratings ①

| FLA Adjustment Range/Overload Release—$I_r$ (Amps) | Short-Circuit Release—$I_{rm}$ (Amps) | Three-Phase | | | | Assembled Manual Motor Controller ② | |
|---|---|---|---|---|---|---|---|
| | | 200V | 240V | 480V | 600V | Non-Reversing Catalog Number | Reversing Catalog Number |
| 0.1–0.16 | 3.2 | ③ | ③ | 1/2 | 1/2 | **XTSCP16BB_** | **XTSRP16BB_** |
| 0.16–0.25 | 3.5 | ③ | ③ | 1/2 | 1/2 | **XTSCP25BB_** | **XTSRP25BB_** |
| 0.25–0.4 | 5.6 | ③ | ③ | 1/2 | 1/2 | **XTSCP40BB_** | **XTSRP40BB_** |
| 0.4–0.63 | 8.82 | ③ | ③ | 1/2 | 1/2 | **XTSCP63BB_** | **XTSRP63BB_** |
| 0.63–1 | 14 | ③ | ③ | 1/2 | 1/2 | **XTSC001BB_** | **XTSR001BB_** |
| 1–1.6 | 22.4 | ③ | ③ | 3/4 | 1 | **XTSC1P6BB_** | **XTSR1P6BB_** |
| 1.6–2.5 | 35 | 1/2 | 1/2 | 1 | 1-1/2 | **XTSC2P5BB_** | **XTSR2P5BB_** |
| 2.5–4 | 56 | 1 | 1 | 2 | 3 | **XTSC004BB_** | **XTSR004BB_** |
| 4–6.3 | 88.2 | 1-1/2 | 1-1/2 | 3 | 5 | **XTSC6P3BB_** | **XTSR6P3BB_** |
| 6.3–10 | 140 | 3 | 3 | 7-1/2 | 7.5 | **XTSC010BB_** | **XTSR010BB_** |
| 8–12 | 168 | 3 | 3 | 7-1/2 | 7.5 | **XTSC012BB_** | **XTSR012BB_** |
| 10–16 | 224 | 3 | 3 | 10 | 7.5 | **XTSC016BB_** | — |

***Notes***

① Select manual motor controllers by full load amperes. Maximum motor ratings (kW, hp) are for reference only.

② Underscore (_) indicates magnetic coil suffix required. See **Page V5-T1-198**.

③ In this range, calculate motor rating according to rated current. Specified values to NEC 430.6(A)(1).

**Frame B MMP + Frame B Contactor**



## Factory-Assembled Motor Protective Device with Thermal and Magnetic Trip + Contactor—Maximum IEC Ratings①

| FLA Adjustment Range/Overload Release—$I_r$ (Amps) | Short-Circuit Release—$I_{rm}$ (Amps) | Three-Phase 220–240V | 380–415V | 500V | 660–690V | Assembled Manual Motor Controller ② Non-Reversing Catalog Number | Reversing Catalog Number |
|---|---|---|---|---|---|---|---|
| 0.1–0.16 | 3.2 | — | — | — | 0.06 | **XTSCP16BB_** | **XTSRP16BB_** |
| 0.16–0.25 | 3.5 | — | 0.06 | 0.06 | 0.12 | **XTSCP25BB_** | **XTSRP25BB_** |
| 0.25–0.4 | 5.6 | 0.06 | 0.09 | 0.12 | 0.18 | **XTSCP40BB_** | **XTSRP40BB_** |
| 0.4–0.63 | 8.82 | 0.09 | 0.18 | 0.25 | 0.25 | **XTSCP63BB_** | **XTSRP63BB_** |
| 0.63–1 | 14 | 0.12 | 0.25 | 0.37 | 0.55 | **XTSC001BB_** | **XTSR001BB_** |
| 1–1.6 | 22.4 | 0.25 | 0.55 | 0.75 | 1.1 | **XTSC1P6BB_** | **XTSR1P6BB_** |
| 1.6–2.5 | 35 | 0.37 | 0.75 | 1.1 | 1.5 | **XTSC2P5BB_** | **XTSR2P5BB_** |
| 2.5–4 | 56 | 0.75 | 1.5 | 2.2 | 3 | **XTSC004BB_** | **XTSR004BB_** |
| 4–6.3 | 88.2 | 1.1 | 2.2 | 3 | 4 | **XTSC6P3BB_** | **XTSR6P3BB_** |
| 6.3–10 | 140 | 2.2 | 4 | 4 | 7.5 | **XTSC010BB_** | **XTSR010BB_** |
| 8–12 | 168 | 3 | 5.5 | 5.5 | 11 | **XTSC012BB_** | **XTSR012BB_** |
| 10–16 | 224 | 4 | 7.5 | 9 | 12.5 | **XTSC016BB_** | — |

**Frame B MMP + Frame C Contactor**



## Factory-Assembled Manual Motor Controller—Frame B MMP + Frame C Contactor—Maximum UL Ratings ①

| FLA Adjustment Range/Overload Release—$I_r$ (Amps) | Short-Circuit Release—$I_{rm}$ (Amps) | Three-Phase 200V | 240V | 480V | 600V | Assembled Manual Motor Controller ② Non-Reversing Catalog Number | Reversing Catalog Number |
|---|---|---|---|---|---|---|---|
| 10–16 | 224 | 3 | 3 | 10 | 10 | **XTSC016BC_** | **XTSR016BC_** |
| 16–20 | 280 | 5 | 5 | 10 | 15 | **XTSC020BC_** | **XTSR020BC_** |
| 20–25 | 350 | 5 | 7-1/2 | 15 | 20 | **XTSC025BC_** | **XTSR025BC_** |
| 25–32 | 448 | 7-1/2 | 10 | 20 | 25 | **XTSC032BC_** | **XTSR032BC_** |

**Frame B MMP + Frame C Contactor**



## Factory-Assembled Manual Motor Controller—Frame B MMP + Frame C Contactor—Maximum IEC RatingS ①

| FLA Adjustment Range/Overload Release—$I_r$ (Amps) | Short-Circuit Release—$I_{rm}$ (Amps) | Three-Phase 220–240V | 380–415V | 500V | 660–690V | Assembled Manual Motor Controller ② Non-Reversing Catalog Number | Reversing Catalog Number |
|---|---|---|---|---|---|---|---|
| 10–16 | 224 | 4 | 7.5 | 9 | 12.5 | **XTSC016BC_** | **XTSR016BC_** |
| 16–20 | 280 | 5.5 | 9 | 12.5 | 15 | **XTSC020BC_** | **XTSR020BC_** |
| 20–25 | 350 | 5.5 | 11 | 15 | 22 | **XTSC025BC_** | **XTSR025BC_** |
| 25–32 | 448 | 7.5 | 15 | 22 | 30 | **XTSC032BC_** | **XTSR032BC_** |

***Notes***

① Select manual motor controllers by full load amperes. Maximum motor ratings (kW, hp) are for reference only.

② Underscore (_) indicates magnetic coil suffix required. See **Page V5-T1-198**.

Frame D MMP + Frame C Contactor



## Factory-Assembled Manual Motor Controller—Frame D MMP + Frame C Contactor—Maximum UL Ratings ①

| FLA Adjustment Range/Overload Release—$I_r$ (Amps) | Short-Circuit Release—$I_{rm}$ (Amps) | Three-Phase 200V | 240V | 480V | 600V | Assembled Manual Motor Controller ② Non-Reversing Catalog Number | Reversing Catalog Number |
|---|---|---|---|---|---|---|---|
| 10–16 | 224 | 3 | 5 | 10 | 15 | **XTSC016DC_** | **XTSR016DC_** |
| 16–25 | 350 | 5 | 7-1/2 | 15 | 20 | **XTSC025DC_** | **XTSR025DC_** |
| 25–32 | 448 | 7-1/2 | 10 | 20 | 30 | **XTSC032DC_** | **XTSR032DC_** |

Frame D MMP + Frame C Contactor



## Factory-Assembled Manual Motor Controller—Frame D MMP + Frame C Contactor—Maximum IEC Ratings ①

| FLA Adjustment Range/Overload Release—$I_r$ (Amps) | Short-Circuit Release—$I_{rm}$ (Amps) | Three-Phase 220–240V | 380–415V | 500V | 660–690V | Assembled Manual Motor Controller ② Non-Reversing Catalog Number | Reversing Catalog Number |
|---|---|---|---|---|---|---|---|
| 10–16 | 224 | 4 | 7.5 | 9 | 12.5 | **XTSC016DC_** | **XTSR016DC_** |
| 16–25 | 350 | 5.5 | 12.5 | 12.5 | 22 | **XTSC025DC_** | **XTSR025DC_** |
| 25–32 | 448 | 7.5 | 15 | 17.5 | 22 | **XTSC032DC_** | **XTSR032DC_** |

Frame D MMP + Frame D Contactor

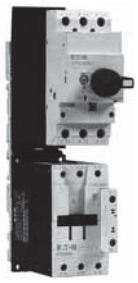

## Factory-Assembled Manual Motor Controller—Frame D MMP + Frame D Contactor—Maximum UL Ratings ①

| FLA Adjustment Range/Overload Release—$I_r$ (Amps) | Short-Circuit Release—$I_{rm}$ (Amps) | Three-Phase 200V | 240V | 480V | 600V | Assembled Manual Motor Controller ② Non-Reversing Catalog Number | Reversing Catalog Number |
|---|---|---|---|---|---|---|---|
| 32–40 | 560 | 10 | 15 | 30 | 30 | **XTSC040DD_** | **XTSR040DD_** |
| 40–50 | 700 | 15 | 15 | 30 | — | **XTSC050DD_** | **XTSR050DD_** |
| 50–58 | 812 | 15 | 15 | 40 | — | **XTSC058DD_** | **XTSR058DD_** |
| 55–65 | 882 | 15 | 15 | 40 | — | **XTSC063DD_** | **XTSR063DD_** |

***Notes***

① Select manual motor controllers by full load amperes. Maximum motor ratings (kW, hp) are for reference only.

② Underscore (_) indicates magnetic coil suffix required. See **Page V5-T1-198**.

**Frame D MMP + Frame D Contactor**



## Factory-Assembled Manual Motor Controller—Frame D MMP + Frame D Contactor—Maximum IEC Ratings ①

| FLA Adjustment Range/Overload Release—$I_r$ (Amps) | Short-Circuit Release—$I_{rm}$ (Amps) | Three-Phase 220–240V | Three-Phase 380–415V | Three-Phase 500V | Three-Phase 660–690V | Assembled Manual Motor Controller ② Non-Reversing Catalog Number | Assembled Manual Motor Controller ② Reversing Catalog Number |
|---|---|---|---|---|---|---|---|
| 32–40 | 560 | 11 | 20 | 22 | 30 | **XTSC040DD_** | **XTSR040DD_** |
| 40–50 | 700 | 14 | 25 | 30 | 45 | **XTSC050DD_** | **XTSR050DD_** |
| 50–58 | 812 | 17 | 30 | 37 | 55 | **XTSC058DD_** | **XTSR058DD_** |
| 55–65 | 882 | 18.5 | 34 | 37 | 55 | **XTSC063DD_** | **XTSR063DD_** |

## AC and DC Coil Suffixes

| Coil Voltage | Suffix Code | Coil Voltage | Suffix Code | Coil Voltage | Suffix Code | Coil Voltage | Suffix Code |
|---|---|---|---|---|---|---|---|
| **Frame B Contactors** | | | | **Frame C and D Contactors** | | | |
| 110V 50 Hz, 120V 60 Hz | **A** | 380V 50 Hz, 440V 60 Hz | **L** | 110V 50 Hz, 120V 60 Hz | **A** | 380V 50 Hz, 440V 60 Hz | **L** |
| 220V 50 Hz, 240V 60 Hz | **B** | 400V 50 Hz | **N** | 220V 50 Hz, 240V 60 Hz | **B** | 400V 50 Hz | **N** |
| 230V 50 Hz | **F** | 380V 60 Hz | **P** | 230V 50 Hz | **F** | 380V 60 Hz | **P** |
| 24V 50/60 Hz | **T** | 12V 50/60 Hz | **R** | 24V 50/60 Hz | **T** | 12V 50/60 Hz | **R** |
| 24 Vdc | **TD** ③ | 42V 50 Hz, 48V 60 Hz | **W** | 24–27 Vdc | **TD** ③ | 42V 50 Hz, 48V 60 Hz | **W** |
| 415V 50 Hz, 480V 60 Hz | **C** | 48V 50 Hz | **Y** | 415V 50 Hz, 480V 60 Hz | **C** | 48V 50 Hz | **Y** |
| 600V 60 Hz | **D** | 120 Vdc | **AD** ③ | 550V 50 Hz, 600V 60 Hz | **D** | 110–130 Vdc | **AD** ③ |
| 208V 60 Hz | **E** | 220 Vdc | **BD** ③ | 208V 60 Hz | **E** | 200–240 Vdc | **BD** ③ |
| 190V 50 Hz, 220V 60 Hz | **G** | 12 Vdc | **RD** ③ | 190V 50 Hz, 220V 60 Hz | **G** | 12–14 Vdc | **RD** ③ |
| 240V 50 Hz, 277V 60 Hz | **H** | 48 Vdc | **WD** ③ | 240V 50 Hz, 277V 60 Hz | **H** | 48–60 Vdc | **WD** ③ |

***Notes***

The assembled manual motor controller (MMC) consists of an XTPR manual motor protector (MMP) and an XTCE contactor. For Frame B MMP + Frame B contactor assemblies, the XTSC and XTSR can be mounted directly on DIN rail without an adapter. The contactors are supported mechanically with a mechanical connection element (included in XTPAXTPCB, XTPAXRPCRB). For MMCs using a Frame C or Frame D contactor, the assembly is mounted via a DIN rail adapter plate (XTPAXTPCPC, XTPAXTPCPD) and the electrical connection is made with electrical contact modules (XTPAXECMC, XTPAXECMD), both included in XTPAXTPCC and XTPAXTPCD.

Service Factor (SF)—Setting Ir of current scale in dependence of load factor:

SF = 1.15 → $I_r = 1 \times I_{n\ mot}$

SF = 1 → $I_r = 0.9 \times I_{n\ mot}$

Single-phasing sensitivity to IEC/EN 60947-4-1, VDE 0660 Part 102.

① Select manual motor controllers by full load amperes. Maximum motor ratings (kW, hp) are for reference only.

② Underscore (_) indicates magnetic coil suffix required. See AC and DC coil suffixes above.

③ With DC operation: Integrated diode-resistor combination, coil rating 2.6W.

## Non-Reversing Manual Motor Controller Power Circuit

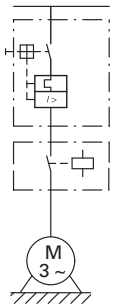


## Reversing Manual Motor Controller Power Circuit

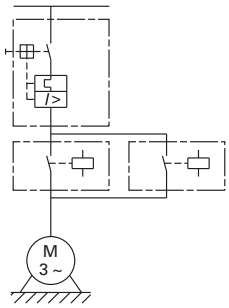

*XTFC and XTFR Combination Motor Controllers (CMC), UL 508 Type F*

1

**Frame B MMP + Two Frame B Contactors**



## Factory-Assembled Type F Combination Motor Controller—Frame B MMP + Frame B Contactor—Maximum UL Ratings ①

| FLA Adjustment Range/Overload Release—$I_r$ (Amps) | Short-Circuit Release—$I_{rm}$ (Amps) | Three-Phase | | | | Assembled Manual Motor Controller ② | |
|---|---|---|---|---|---|---|---|
| | | 200V | 240V | 480V | 600V | Non-Reversing Catalog Number | Reversing Catalog Number |
| 0.16–0.25 | 3.5 | ③ | ③ | 1/2 | 1/2 | **XTFCP25BB_** | **XTFRP25BB_** |
| 0.25–0.4 | 5.6 | ③ | ③ | 1/2 | 1/2 | **XTFCP40BB_** | **XTFRP40BB_** |
| 0.4–0.63 | 8.82 | ③ | ③ | 1/2 | 1/2 | **XTFCP63BB_** | **XTFRP63BB_** |
| 0.63–1 | 14 | ③ | ③ | 1/2 | 1/2 | **XTFC001BB_** | **XTFR001BB_** |
| 1–1.6 | 22.4 | ③ | ③ | 3/4 | 1 | **XTFC1P6BB_** | **XTFR1P6BB_** |
| 1.6–2.5 | 35 | 1/2 | 1/2 | 1 | 1-1/2 | **XTFC2P5BB_** | **XTFR2P5BB_** |
| 2.5–4 | 56 | 1 | 1 | 2 | 3 | **XTFC004BB_** | **XTFR004BB_** |
| 4–6.3 | 88.2 | 1-1/2 | 1-1/2 | 3 | 5 | **XTFC6P3BB_** | **XTFR6P3BB_** |
| 6.3–10 | 140 | 3 | 3 | 7-1/2 | 7.5 | **XTFC010BB_** | **XTFR010BB_** |
| 8–12 | 168 | 3 | 3 | 7-1/2 | — | **XTFC012BB_** | **XTFR012BB_** |
| 10–16 | 224 | 3 | 5 | 10 | — | **XTFC016BB_** | — |

## Factory-Assembled Type F Combination Motor Controller—Frame B MMP + Frame B Contactor—Maximum IEC Ratings ①

| FLA Adjustment Range/Overload Release—$I_r$ (Amps) | Short-Circuit Release—$I_{rm}$ (Amps) | Three-Phase | | | | Assembled Manual Motor Controller ② | |
|---|---|---|---|---|---|---|---|
| | | 220–240V | 380–415V | 500V | 660–690V | Non-Reversing Catalog Number | Reversing Catalog Number |
| 0.1–0.16 | 2.2 | — | — | — | 0.06 | **XTFCP16BB_** | **XTFRP16BB_** |
| 0.16–0.25 | 3.5 | — | 0.06 | 0.06 | 0.12 | **XTFCP25BB_** | **XTFRP25BB_** |
| 0.25–0.4 | 5.6 | 0.06 | 0.09 | 0.12 | 0.18 | **XTFCP40BB_** | **XTFRP40BB_** |
| 0.4–0.63 | 8.82 | 0.09 | 0.18 | 0.25 | 0.25 | **XTFCP63BB_** | **XTFRP63BB_** |
| 0.63–1 | 14 | 0.12 | 0.25 | 0.37 | 0.55 | **XTFC001BB_** | **XTFR001BB_** |
| 1–1.6 | 22.4 | 0.25 | 0.55 | 0.75 | 1.1 | **XTFC1P6BB_** | **XTFR1P6BB_** |
| 1.6–2.5 | 35 | 0.37 | 0.75 | 1.1 | 1.5 | **XTFC2P5BB_** | **XTFR2P5BB_** |
| 2.5–4 | 56 | 0.75 | 1.5 | 2.2 | 3 | **XTFC004BB_** | **XTFR004BB_** |
| 4–6.3 | 88.2 | 1.1 | 2.2 | 3 | 4 | **XTFC6P3BB_** | **XTFR6P3BB_** |
| 6.3–10 | 140 | 2.2 | 4 | 4 | 7.5 | **XTFC010BB_** | **XTFR010BB_** |
| 8–12 | 168 | 3 | 5.5 | 5.5 | 11 | **XTFC012BB_** | **XTFR012BB_** |
| 10–16 | 224 | 4 | 7.5 | 9 | 12.5 | **XTFC016BB_** | — |

***Notes***

① Select combination motor controllers by full load amperes. Maximum motor ratings (kW, hp) are for reference only.

② Underscore (_) indicates magnetic coil suffix required. See **Page V5-T1-202**.

③ In this range, calculate motor rating according to rated current. Specified values to NEC 430.6(A)(1).

## Factory-Assembled Type F Combination Motor Controller—Frame B MMP + Frame C Contactor—Maximum UL Ratings ①

| FLA Adjustment Range/Overload Release—$I_r$ (Amps) | Short-Circuit Release—$I_{rm}$ (Amps) | Three-Phase | | | | Assembled Manual Motor Controller ② | |
|---|---|---|---|---|---|---|---|
| | | 200V | 240V | 480V | 600V | Non-Reversing Catalog Number | Reversing Catalog Number |
| 10–16 | 224 | 3 | 5 | 10 | — | **XTFC016BC_** | **XTFR016BC_** |
| 16–20 | 280 | 5 | 5 | — | — | **XTFC020BC_** | **XTFR020BC_** |
| 20–25 | 350 | 5 | 7-1/2 | 15 | — | **XTFC025BC_** | **XTFR025BC_** |
| 25–32 | 448 | 7-1/2 | 10 | 20 | — | **XTFC032BC_** | **XTFR032BC_** |

## Factory-Assembled Type F Combination Motor Controller—Frame B MMP + Frame C Contactor—Maximum IEC Ratings ①

| FLA Adjustment Range/Overload Release—$I_r$ (Amps) | Short-Circuit Release—$I_{rm}$ (Amps) | Three-Phase | | | | Assembled Manual Motor Controller ② | |
|---|---|---|---|---|---|---|---|
| | | 220–240V | 380–415V | 500V | 660–690V | Non-Reversing Catalog Number | Reversing Catalog Number |
| 10–16 | 224 | 4 | 7.5 | 9 | 12.5 | **XTFC016BC_** | **XTFR016BC_** |
| 16–20 | 280 | 5.5 | 9 | 12.5 | 15 | **XTFC020BC_** | **XTFR020BC_** |
| 20–25 | 350 | 5.5 | 11 | 15 | 22 | **XTFC025BC_** | **XTFR025BC_** |
| 25–32 | 448 | 7.5 | 15 | 22 | 30 | **XTFC032BC_** | **XTFR032BC_** |

***Notes***

① Select combination motor controllers by full load amperes. Maximum motor ratings (kW, hp) are for reference only.

② Underscore (_) indicates magnetic coil suffix required. See **Page V5-T1-202**.

## Factory-Assembled Type F Combination Motor Controller—Frame D MMP + Frame C Contactor—Maximum UL Ratings ①

| FLA Adjustment Range/Overload Release—$I_r$ (Amps) | Short-Circuit Release—$I_{rm}$ (Amps) | Three-Phase | | | | Assembled Manual Motor Controller ② | |
|---|---|---|---|---|---|---|---|
| | | 200V | 240V | 480V | 600V | Non-Reversing Catalog Number | Reversing Catalog Number |
| 10–16 | 224 | 3 | 5 | 10 | 10 | **XTFC016DC_** | **XTFR016DC_** |
| 16–25 | 350 | 5 | 7-1/2 | 15 | 20 | **XTFC025DC_** | **XTFR025DC_** |
| 25–32 | 448 | 7-1/2 | 10 | 25 | 30 | **XTFC032DC_** | **XTFR032DC_** |

## Factory-Assembled Type F Combination Motor Controller—Frame D MMP + Frame C Contactor—Maximum IEC Ratings ①

| FLA Adjustment Range/Overload Release—$I_r$ (Amps) | Short-Circuit Release—$I_{rm}$ (Amps) | Three-Phase | | | | Assembled Manual Motor Controller ② | |
|---|---|---|---|---|---|---|---|
| | | 220–240V | 380–415V | 500V | 660–690V | Non-Reversing Catalog Number | Reversing Catalog Number |
| 10–16 | 224 | 4 | 7.5 | 9 | 12.5 | **XTFC016DC_** | **XTFR016DC_** |
| 16–25 | 350 | 5.5 | 12.5 | 12.5 | 22 | **XTFC025DC_** | **XTFR025DC_** |
| 25–32 | 448 | 7.5 | 15 | 17.5 | 22 | **XTFC032DC_** | **XTFR032DC_** |

## Factory-Assembled Type F Combination Motor Controller—Frame D MMP + Frame D Contactor—Maximum UL Ratings ①

| FLA Adjustment Range/Overload Release—$I_r$ (Amps) | Short-Circuit Release—$I_{rm}$ (Amps) | Three-Phase | | | | Assembled Manual Motor Controller ② | |
|---|---|---|---|---|---|---|---|
| | | 200V | 240V | 480V | 600V | Non-Reversing Catalog Number | Reversing Catalog Number |
| 32–40 | 560 | 10 | 15 | 30 | 30 | **XTFC040DD_** | **XTFR040DD_** |
| 40–50 | 700 | 10 | 15 | 30 | — | **XTFC050DD_** | **XTFR050DD_** |
| 50–58 | 812 | 15 | 15 | 40 | — | **XTFC058DD_** | **XTFR058DD_** |
| 55–65 | 882 | 15 | 15 | 40 | — | **XTFC063DD_** | **XTFR063DD_** |

***Notes***

① Select combination motor controllers by full load amperes. Maximum motor ratings (kW, hp) are for reference only.

② Underscore (_) indicates magnetic coil suffix required. See **Page V5-T1-202**.

## Factory-Assembled Type F Combination Motor Controller—Frame D MMP + Frame D Contactor—Maximum IEC Ratings ①

| FLA Adjustment Range/Overload Release—$I_r$ (Amps) | Short-Circuit Release—$I_{rm}$ (Amps) | Three-Phase 220–240V | 380–415V | 500V | 660–690V | Assembled Manual Motor Controller ② Non-Reversing Catalog Number | Reversing Catalog Number |
|---|---|---|---|---|---|---|---|
| 32–40 | 560 | 11 | 20 | 22 | 30 | **XTFC040DD_** | **XTFR040DD_** |
| 40–50 | 700 | 14 | 25 | 30 | 45 | **XTFC050DD_** | **XTFR050DD_** |
| 50–58 | 812 | 17 | 30 | 37 | 55 | **XTFC058DD_** | **XTFR058DD_** |
| 55–65 | 882 | 18.5 | 34 | 37 | 55 | **XTFC063DD_** | **XTFR063DD_** |

## AC and DC Coil Suffixes

| Coil Voltage | Suffix Code | Coil Voltage | Suffix Code | Coil Voltage | Suffix Code | Coil Voltage | Suffix Code |
|---|---|---|---|---|---|---|---|
| **Frame B Contactors** | | | | **Frame C and D Contactors** | | | |
| 110V 50 Hz, 120V 60 Hz | **A** | 380V 50 Hz, 440V 60 Hz | **L** | 110V 50 Hz, 120V 60 Hz | **A** | 380V 50 Hz, 440V 60 Hz | **L** |
| 220V 50 Hz, 240V 60 Hz | **B** | 400V 50 Hz | **N** | 220V 50 Hz, 240V 60 Hz | **B** | 400V 50 Hz | **N** |
| 230V 50 Hz | **F** | 380V 60 Hz | **P** | 230V 50 Hz | **F** | 380V 60 Hz | **P** |
| 24V 50/60 Hz | **T** | 12V 50/60 Hz | **R** | 24V 50/60 Hz | **T** | 12V 50/60 Hz | **R** |
| 24 Vdc | **TD** ③ | 42V 50 Hz, 48V 60 Hz | **W** | 24–27 Vdc | **TD** ③ | 42V 50 Hz, 48V 60 Hz | **W** |
| 415V 50 Hz, 480V 60 Hz | **C** | 48V 50 Hz | **Y** | 415V 50 Hz, 480V 60 Hz | **C** | 48V 50 Hz | **Y** |
| 600V 60 Hz | **D** | 120 Vdc | **AD** ③ | 550V 50 Hz, 600V 60 Hz | **D** | 110–130 Vdc | **AD** ③ |
| 208V 60 Hz | **E** | 220 Vdc | **BD** ③ | 208V 60 Hz | **E** | 200–240 Vdc | **BD** ③ |
| 190V 50 Hz, 220V 60 Hz | **G** | 12 Vdc | **RD** ③ | 190V 50 Hz, 220V 60 Hz | **G** | 12–14 Vdc | **RD** ③ |
| 240V 50 Hz, 277V 60 Hz | **H** | 48 Vdc | **WD** ③ | 240V 50 Hz, 277V 60 Hz | **H** | 48–60 Vdc | **WD** ③ |

***Notes***

The assembled manual motor controller (MMC) consists of an XTPR manual motor protector (MMP) and an XTCE contactor. For Frame B MMP + Frame B contactor assemblies, the XTSC and XTSR can be mounted directly on DIN rail without an adapter. The contactors are supported mechanically with a mechanical connection element (included in XTPAXTPCB, XTPAXRPCRB). For 16A and above, the assembly is mounted via a DIN rail adapter plate (XTPAXTPCPC, XTPAXTPCPD) and the electrical connection is made with electrical contact modules (XTPAXECMC, XTPAXECMD), both included in XTPAXTPCC and XTPAXTPCD.

Service Factor (SF)—Setting $I_r$ of current scale in dependence of load factor:

SF = 1.15 → $I_r = 1 \times I_{n\ mot}$

SF = 1 → $I_r = 0.9 \times I_{n\ mot}$

Single-phasing sensitivity to IEC/EN 60947-4-1, VDE 0660 Part 102.

① Select combination motor controllers by full load amperes. Maximum motor ratings (kW, hp) are for reference only.

② Underscore (_) indicates magnetic coil suffix required. See AC and DC coil suffixes above.

③ With DC operation: Integrated diode-resistor combination, coil rating 2.6W.

## XTFC Manual Motor Controller

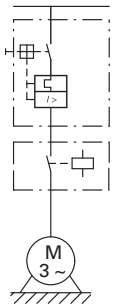


## XTFR Manual Motor Controller

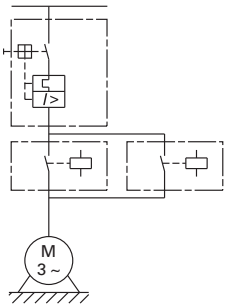

## Accessories

### *Line Side Adapters*

Line side adapters are required for use with XTPR MMPs only when used as Type E self-protected manual combination starters or as part of XTFC or XTFR Type F combination motor controllers. Not required for group installation.

#### Line Side Adapters

| | Description | Catalog Number |
|---|---|---|
| **XTPAXLSA**  | For use with Frame B MMPs (up to 32A) | **XTPAXLSA** |
| **XTPAXLSAD**  | For use with Frame D MMPs (up to 40A) | **XTPAXLSAD** |

### *Combination Connection Kits*

Combination connection kits include the necessary components to field assemble a manual motor controller with an MMP (XTPR) and contactor (XTCE).

#### Non-Reversing Starters

| | For Use with … | Description/Composed of … | Std. Pack ① | Catalog Number |
|---|---|---|---|---|
| **XTPAXTPCB** 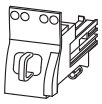 | XTPR…B + XTCE…B | Mechanical connection element for XTPR…B and contactor | 1 | **XTPAXTPCB** |
| | | Main current wiring between XTPR…B and contactor in toolless plug connection | 1 | |
| | | Cable guidance | 1 | |
| | | Use as contactor auxiliary switch XTCEXFAT_. Control cable guidance: max. six cables up to 2.5 $mm^2$ external diameter or four cables up to 3.5 $mm^2$ external diameter | | |
| **XTPAXEMCB** 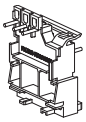 | XTPR…B + XTCE…B | Mechanical connection element for XTPR…B and contactor | 1 | **XTPAXEMCB** |
| | | Main current wiring between XTPR…B and contactor screw in type connection | 1 | |
| **XTPAXTPCC and XTPAXTPCD** 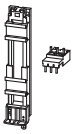 | XTPR…B + XTCE…C | DIN rail adapter plate | 1 | **XTPAXTPCC** |
| | XTPR…D + XTCE…D | Main current wiring between XTPR and contactor | 1 | **XTPAXTPCD** |

#### Reversing Starters

| | For Use with … | Description/Composed of … | Std. Pack ① | Catalog Number |
|---|---|---|---|---|
| **XTPAXTPCRB** 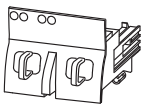 | XTPR…B + XTCE…B01_ | Mechanical connection element for XTPR…B and contactor | 1 | **XTPAXTPCRB** |
| | | Reversing starter main current wiring in toolless plug connection | 1 | |
| | | Control cables for electrical interlocking in toolless plug connection— K1M: A1–K2M: 21, K1M: 21–K2M: A1, K1M: A2–K2M: A2 | 1 | |
| | | Cable guidance | 1 | |
| | | Use as contactor auxiliary switch XTCEXFAT_. Control cable guidance: max. six cables up to 2.5 $mm^2$ external diameter or four cables up to 3.5 $mm^2$ external diameter. | | |
| **XTPAXTPCRC** 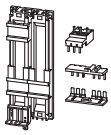 | XTPR…B + XTCE…C | DIN rail adapter plate | 1 | **XTPAXTPCRC** |
| | | Reversing starter main current wiring | 1 | |

***Note***

① Orders must be placed in multiples of package quantity listed.

## Electric Contact Module

**XTPAXEC_**

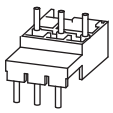

| For Use with … | Description/Composed of … | Std. Pack ① | Catalog Number |
|---|---|---|---|
| XTPR…B + XTCE…C | Main current wiring between XTPR…B and contactor | 5 | **XTPAXECMC** |
| | Use only in combination with busbar adapter | | |
| XTPR…D + XTCE…D | Main current wiring between XTPR…D and contactor | 5 | **XTPAXECMD** |
| | Use only in combination with busbar adapter | | |

## DIN Rail Adapter Plates

| | For Use with … | Description/Composed of … | Std. Pack ① | Catalog Number |
|---|---|---|---|---|
| **XTPAXTPCPB**  | XTPAXTPCB<br>XTPAXTPCRB | 45 mm wide adapter plate with one DIN rail | 4 | **XTPAXTPCPB** |
| | | Connection element for side-by-side positioning of further plates | | |
| **XTPAXTPCRPB** 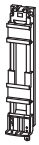 | XTPR…B + XTCE…C<br>XTPAXECMC | 45 mm wide adapter plate with one DIN rail | 4 | **XTPAXTPCRPB** |
| | | Connection element for side-by-side positioning of further plates | | |
| **XTPAXTPCPD**  | XTPAXECMD<br>XTPR…D + XTCE…C<br>XTPR…D + XTCE…D | 55 mm wide adapter plate with two DIN rails | 4 | **XTPAXTPCPD** |
| | | Connection cams for further plates | 4 | |
| | | For use with reversing and star-delta starters | | |

## Lateral Module

| For Use with … | Description/Composed of … | Std. Pack ① | Catalog Number |
|---|---|---|---|
| — | Can be grouped on the DIN rail adapter | 10 | **XTPAXLM** |
| | Expansion of the mounting width by 9 mm | | |

## Connection Element

| For Use with … | Description/Composed of … | Std. Pack ① | Catalog Number |
|---|---|---|---|
| — | For connection of several DIN rail adapters | 50 | **XTPAXCNE** |

***Note***

① Orders must be placed in multiples of package quantity listed.

## Technical Data and Specifications



### XTSC Non-Reversing Manual Motor Controllers (MMC)—Component Bill of Material

**Factory Assembled Manual Motor Protector + Contactor**

| Assembled Manual Motor Controller ① | FLA Adjustment Range/Overload Release—$I_r$ (Amps) | Component Catalog Numbers | | | |
|---|---|---|---|---|---|
| | | Manual Motor Protector | Combination Connection Kit | Contactor ① | Manual Motor Protector Auxiliary Contact |
| **XTSC Frame B MMP + Frame B Contactor** | | | | | |
| **XTSCP16BB_** | 0.1–0.16 | XTPRP16BC1 | XTPAXTPCB | XTCE007B10_ | XTPAXFA11 |
| **XTSCP25BB_** | 0.16–0.25 | XTPRP25BC1 | XTPAXTPCB | XTCE007B10_ | XTPAXFA11 |
| **XTSCP40BB_** | 0.25–0.4 | XTPRP40BC1 | XTPAXTPCB | XTCE007B10_ | XTPAXFA11 |
| **XTSCP63BB_** | 0.4–0.63 | XTPRP63BC1 | XTPAXTPCB | XTCE007B10_ | XTPAXFA11 |
| **XTSC001BB_** | 0.63–1 | XTPR001BC1 | XTPAXTPCB | XTCE007B10_ | XTPAXFA11 |
| **XTSC1P6BB_** | 1–1.6 | XTPR1P6BC1 | XTPAXTPCB | XTCE007B10_ | XTPAXFA11 |
| **XTSC2P5BB_** | 1.6–2.5 | XTPR2P5BC1 | XTPAXTPCB | XTCE007B10_ | XTPAXFA11 |
| **XTSC004BB_** | 2.5–4 | XTPR004BC1 | XTPAXTPCB | XTCE007B10_ | XTPAXFA11 |
| **XTSC6P3BB_** | 4–6.3 | XTPR6P3BC1 | XTPAXTPCB | XTCE007B10_ | XTPAXFA11 |
| **XTSC010BB_** | 6.3–10 | XTPR010BC1 | XTPAXTPCB | XTCE009B10_ | XTPAXFA11 |
| **XTSC012BB_** | 8–12 | XTPR012BC1 | XTPAXTPCB | XTCE012B10_ | XTPAXFA11 |
| **XTSC016BB_** | 10–16 | XTPR016BC1 | XTPAXTPCB | XTCE015B10_ | XTPAXFA11 |
| **XTSC Frame B MMP + Frame C Contactor** | | | | | |
| **XTSC016BC_** | 10–16 | XTPR016BC1 | XTPAXTPCC | XTCE018C10_ | XTPAXFA1 |
| **XTSC020BC_** | 16–20 | XTPR020BC1 | XTPAXTPCC | XTCE025C10_ | XTPAXFA11 |
| **XTSC025BC_** | 20–25 | XTPR025BC1 | XTPAXTPCC | XTCE025C10_ | XTPAXFA11 |
| **XTSC032BC_** | 25–32 | XTPR032BC1 | XTPAXTPCC | XTCE032C10_ | XTPAXFA11 |
| **XTSC Frame D MMP + Frame C Contactor** | | | | | |
| **XTSC016DC_** | 10–16 | XTPR016DC1 | ② | XTCE018C10_ | XTPAXFA1 |
| **XTSC025DC_** | 16–25 | XTPR025DC1 | ② | XTCE025C10_ | XTPAXFA11 |
| **XTSC032DC_** | 25–32 | XTPR032DC1 | ② | XTCE032C10_ | XTPAXFA11 |
| **XTSC Frame D MMP + Frame D Contactor** | | | | | |
| **XTSC040DD_** | 32–40 | XTPR040DC1 | XTPAXTPCD ③ | XTCE040D00_ | XTPAXFA11 |
| **XTSC050DD_** | 40–50 | XTPR050DC1 | XTPAXTPCD ③ | XTCE050D00_ | XTPAXFA11 |
| **XTSC058DD_** | 50–58 | XTPR058DC1 | XTPAXTPCD ③ | XTCE065D00_ | XTPAXFA11 |
| **XTSC063DD_** | 55–65 | XTPR063DC1 | XTPAXTPCD ③ | XTCE065D00_ | XTPAXFA11 |

***Notes***

① Underscore (_) indicates magnetic coil suffix required. See **Page V5-T1-202**.

② The connection between the XTPR…DC1 and the XTCE…C_ contactor will be made with flexible wire and mounted to the DIN rail adapter plate (XTPAXTPCPD).

③ The reversing connection between the XTPR…DC1 and the (2) XTCE…C_ contactors will be accomplished by using the non-reversing combination connection kit (XTPAXTPCD), Frame D reversing link kit (XTCEXRLD), additional DIN rail adapter plate (XTPAXTPCPD) and DIN adapter connection element (XTPAXCNE).

1

## XTSR Reversing Manual Motor Controllers (MMC)—Component Bill of Material

**Factory Assembled Manual Motor Protector + Contactor**

| Assembled Manual Motor Controller ① | FLA Adjustment Range/Overload Release—$I_r$ (Amps) | Component Catalog Numbers<br>Manual Motor Protector | Combination Connection Kit | Contactor ① | Manual Motor Protector Auxiliary Contact |
|---|---|---|---|---|---|
| **XTSR Frame B MMP + Frame B Contactor** | | | | | |
| **XTSRP16BB_** | 0.1–0.16 | XTPRP16BC1 | XTPAXTPCRB | (2) XTCE007B01_ | XTPAXFA11 |
| **XTSRP25BB_** | 0.16–0.25 | XTPRP25BC1 | XTPAXTPCRB | (2) XTCE007B01_ | XTPAXFA11 |
| **XTSRP40BB_** | 0.25–0.4 | XTPRP40BC1 | XTPAXTPCRB | (2) XTCE007B01_ | XTPAXFA11 |
| **XTSRP63BB_** | 0.4–0.63 | XTPRP63BC1 | XTPAXTPCRB | (2) XTCE007B01_ | XTPAXFA11 |
| **XTSR001BB_** | 0.63–1 | XTPR001BC1 | XTPAXTPCRB | (2) XTCE007B01_ | XTPAXFA11 |
| **XTSR1P6BB_** | 1–1.6 | XTPR1P6BC1 | XTPAXTPCRB | (2) XTCE007B01_ | XTPAXFA11 |
| **XTSR2P5BB_** | 1.6–2.5 | XTPR2P5BC1 | XTPAXTPCRB | (2) XTCE007B01_ | XTPAXFA11 |
| **XTSR004BB_** | 2.5–4 | XTPR004BC1 | XTPAXTPCRB | (2) XTCE007B01_ | XTPAXFA11 |
| **XTSR6P3BB_** | 4–6.3 | XTPR6P3BC1 | XTPAXTPCRB | (2) XTCE007B01_ | XTPAXFA11 |
| **XTSR010BB_** | 6.3–10 | XTPR010BC1 | XTPAXTPCRB | (2) XTCE009B01_ | XTPAXFA11 |
| **XTSR012BB_** | 8–12 | XTPR012BC1 | XTPAXTPCRB | (2) XTCE012B01_ | XTPAXFA11 |
| **XTSR Frame B MMP + Frame C Contactor** | | | | | |
| **XTSR016BC_** | 10–16 | XTPR016BC1 | XTPAXTPCRC | (2) XTCE018C01 | XTPAXFA11 |
| **XTSR020BC_** | 16–20 | XTPR020BC1 | XTPAXTPCRC | (2) XTCE025C01_ | XTPAXFA11 |
| **XTSR025BC_** | 20–25 | XTPR025BC1 | XTPAXTPCRC | (2) XTCE025C01_ | XTPAXFA11 |
| **XTSR032BC_** | 25–32 | XTPR032BC1 | XTPAXTPCRC | (2) XTCE032C01_ | XTPAXFA11 |
| **XTSR Frame D MMP + Frame C Contactor** | | | | | |
| **XTSR016DC_** | 10–16 | XTPR016DC1 | ② | (2) XTCE018C01 | XTPAXFA11 |
| **XTSR025DC_** | 16–25 | XTPR025DC1 | ② | (2) XTCE025C01_ | XTPAXFA11 |
| **XTSR032DC_** | 25–32 | XTPR032DC1 | ② | (2) XTCE032C01_ | XTPAXFA11 |
| **XTSR Frame D MMP + Frame D Contactor** | | | | | |
| **XTSR040DD_** | 32–40 | XTPR040DC1 | ③ | (2) XTCE040D00_ | XTPAXFA11 |
| **XTSR050DD_** | 40–50 | XTPR050DC1 | ③ | (2) XTCE050D00_ | XTPAXFA11 |
| **XTSR058DD_** | 50–58 | XTPR058DC1 | ③ | (2) XTCE065D00_ | XTPAXFA11 |
| **XTSR063DD_** | 55–65 | XTPR063DC1 | ③ | (2) XTCE065D00_ | XTPAXFA11 |

***Notes***

① Underscore (_) indicates magnetic coil suffix required. See **Page V5-T1-202**.

② The connection between the XTPR…DC1 and the XTCE…C_ contactor will be made with flexible wire and mounted to the DIN rail adapter plate (XTPAXTPCPD).

③ The reversing connection between the XTPR…DC1 and the (2) XTCE…C_ contactors will be accomplished by using the non-reversing combination connection kit (XTPAXTPCD), Frame D reversing link kit (XTCEXRLD), additional DIN rail adapter plate (XTPAXTPCPD) and DIN adapter connection element (XTPAXCNE).

## XTFC Non-Reversing Combination Motor Controllers—Component Bill of Material

**Factory Assembled Manual Motor Protector + Contactor + Line Side Adapter**

| Assembled Combination Motor Controller ① | FLA Adjustment Range/ Overload Release—$I_r$ (Amps) | Component Catalog Numbers | | | | |
|---|---|---|---|---|---|---|
| | | Line Side Adapter | Manual Motor Protector | Combination Connection Kit | Contactor ① | Manual Motor Protector Auxiliary Contact |
| **XTFC Frame B MMP + Frame B Contactor** | | | | | | |
| **XTFCP16BB_** | 0.1–0.16 | XTPAXLSA | XTPRP16BC1 | XTPAXTPCB | XTCE007B10_ | XTPAXFA11 |
| **XTFCP25BB_** | 0.16–0.25 | XTPAXLSA | XTPRP25BC1 | XTPAXTPCB | XTCE007B10_ | XTPAXFA11 |
| **XTFCP40BB_** | 0.25–0.4 | XTPAXLSA | XTPRP40BC1 | XTPAXTPCB | XTCE007B10_ | XTPAXFA11 |
| **XTFCP63BB_** | 0.4–0.63 | XTPAXLSA | XTPRP63BC1 | XTPAXTPCB | XTCE007B10_ | XTPAXFA11 |
| **XTFC001BB_** | 0.63–1 | XTPAXLS | XTPR001BC1 | XTPAXTPCB | XTCE007B10_ | XTPAXFA11 |
| **XTFC1P6BB_** | 1–1.6 | XTPAXLSA | XTPR1P6BC1 | XTPAXTPCB | XTCE007B10_ | XTPAXFA11 |
| **XTFC2P5BB_** | 1.6–2.5 | XTPAXLSA | XTPR2P5BC1 | XTPAXTPCB | XTCE007B10_ | XTPAXFA11 |
| **XTFC004BB_** | 2.5–4 | XTPAXLSA | XTPR004BC1 | XTPAXTPCB | XTCE007B10_ | XTPAXFA11 |
| **XTFC6P3BB_** | 4–6.3 | XTPAXLSA | XTPR6P3BC1 | XTPAXTPCB | XTCE007B10_ | XTPAXFA11 |
| **XTFC010BB_** | 6.3–10 | XTPAXLSA | XTPR010BC1 | XTPAXTPCB | XTCE009B10_ | XTPAXFA11 |
| **XTFC012BB_** | 8–12 | XTPAXLSA | XTPR012BC1 | XTPAXTPCB | XTCE012B10_ | XTPAXFA11 |
| **XTFC016BB_** | 10–16 | XTPAXLSA | XTPR016BC1 | XTPAXTPCB | XTCE015B10_ | XTPAXFA11 |
| **XTFC Frame B MMP + Frame C Contactor** | | | | | | |
| **XTFC016BC_** | 10–16 | XTPAXLSA | XTPR016BC1 | XTPAXTPCC | XTCE018C10_ | XTPAXFA11 |
| **XTFC020BC_** | 16–20 | XTPAXLSA | XTPR020BC1 | XTPAXTPCC | XTCE025C10_ | XTPAXFA11 |
| **XTFC025BC_** | 20–25 | XTPAXLSA | XTPR025BC1 | XTPAXTPCC | XTCE025C10_ | XTPAXFA11 |
| **XTFC032BC_** | 25–32 | XTPAXLSA | XTPR032BC1 | XTPAXTPCC | XTCE032C10_ | XTPAXFA11 |
| **XTFC Frame D MMP + Frame C Contactor** | | | | | | |
| **XTFC016DC_** | 10–16 | XTPAXLSAD | XTPR016DC1 | ② | XTCE018C10_ | XTPAXFA11 |
| **XTFC025DC_** | 16–25 | XTPAXLSAD | XTPR025DC1 | ② | XTCE025C10_ | XTPAXFA11 |
| **XTFC032DC_** | 25–32 | XTPAXLSAD | XTPR032DC1 | ② | XTCE032C10_ | XTPAXFA11 |
| **XTFC Frame D MMP + Frame D Contactor** | | | | | | |
| **XTFC040DD_** | 32–40 | XTPAXLSAD | XTPR040DC1 | XTPAXTPCD ③ | XTCE040D00_ | XTPAXFA11 |
| **XTFC050DD_** | 40–50 | XTPAXLSAD | XTPR050DC1 | XTPAXTPCD ③ | XTCE050D00_ | XTPAXFA11 |
| **XTFC058DD_** | 50–58 | XTPAXLSAD | XTPR058DC1 | XTPAXTPCD ③ | XTCE065D00_ | XTPAXFA11 |
| **XTFC063DD_** | 55–65 | XTPAXLSAD | XTPR063DC1 | XTPAXTPCD ③ | XTCE065D00_ | XTPAXFA11 |

***Notes***

① Underscore (_) indicates magnetic coil suffix required. See **Page V5-T1-202**.

② The connection between the XTPR…DC1 and the XTCE…C_ contactor will be made with flexible wire and mounted to the DIN rail adapter plate (XTPAXTPCPD).

③ The reversing connection between the XTPR…DC1 and the (2) XTCE…C_ contactors will be accomplished by using the non-reversing combination connection kit (XTPAXTPCD), Frame D reversing link kit (XTCEXRLD), additional DIN rail adapter plate (XTPAXTPCPD) and DIN adapter connection element (XTPAXCNE).

1

## XTFR Reversing Combination Motor Controllers—Component Bill of Material

**Factory Assembled Manual Motor Protector + Contactor + Line Side Adapter**

| Assembled Combination Motor Controller ① | FLA Adjustment Range/ Overload Release—$I_r$ (Amps) | Component Catalog Numbers | | | | |
|---|---|---|---|---|---|---|
| | | Line Side Adapter | Manual Motor Protector | Combination Connection Kit | Contactor ① | Manual Motor Protector Auxiliary Contact |
| **XTFR Frame B MMP + Frame B Contactor** | | | | | | |
| **XTFRP16BB_** | 0.1–0.16 | XTPAXLSA | XTPRP16BC1 | XTPAXTPCRB | (2) XTCE007B01_ | XTPAXFA11 |
| **XTFRP25BB_** | 0.16–0.25 | XTPAXLSA | XTPRP25BC1 | XTPAXTPCRB | (2) XTCE007B01_ | XTPAXFA11 |
| **XTFRP40BB_** | 0.25–0.4 | XTPAXLSA | XTPRP40BC1 | XTPAXTPCRB | (2) XTCE007B01_ | XTPAXFA11 |
| **XTFRP63BB_** | 0.4–0.63 | XTPAXLSA | XTPRP63BC1 | XTPAXTPCRB | (2) XTCE007B01_ | XTPAXFA11 |
| **XTFR001BB_** | 0.63–1 | XTPAXLSA | XTPR001BC1 | XTPAXTPCRB | (2) XTCE007B01_ | XTPAXFA11 |
| **XTFR1P6BB_** | 1–1.6 | XTPAXLSA | XTPR1P6BC1 | XTPAXTPCRB | (2) XTCE007B01_ | XTPAXFA11 |
| **XTFR2P5BB_** | 1.6–2.5 | XTPAXLSA | XTPR2P5BC1 | XTPAXTPCRB | (2) XTCE007B01_ | XTPAXFA11 |
| **XTFR004BB_** | 2.5–4 | XTPAXLSA | XTPR004BC1 | XTPAXTPCRB | (2) XTCE007B01_ | XTPAXFA11 |
| **XTFR6P3BB_** | 4–6.3 | XTPAXLSA | XTPR6P3BC1 | XTPAXTPCRB | (2) XTCE007B01_ | XTPAXFA11 |
| **XTFR010BB_** | 6.3–10 | XTPAXLSA | XTPR010BC | XTPAXTPCRB | (2) XTCE009B01_ | XTPAXFA11 |
| **XTFR012BB_** | 8–12 | XTPAXLSA | XTPR012BC1 | XTPAXTPCRB | (2) XTCE012B01_ | XTPAXFA11 |
| **XTFR Frame B MMP + Frame C Contactor** | | | | | | |
| **XTFR016BC_** | 10–16 | XTPAXLSA | XTPR016BC1 | XTPAXTPCRC | (2) XTCE018C01_ | XTPAXFA11 |
| **XTFR020BC_** | 16–20 | XTPAXLSA | XTPR020BC1 | XTPAXTPCRC | (2) XTCE025C01_ | XTPAXFA11 |
| **XTFR025BC_** | 20–25 | XTPAXLSA | XTPR025BC1 | XTPAXTPCRC | (2) XTCE025C01_ | XTPAXFA11 |
| **XTFR032BC_** | 25–32 | XTPAXLSA | XTPR032BC1 | XTPAXTPCRC | (2) XTCE032C01_ | XTPAXFA11 |
| **XTFR Frame D MMP + Frame C Contactor** | | | | | | |
| **XTFR016DC_** | 10–16 | XTPAXLSAD | XTPR016DC1 | ② | (2) XTCE018C01_ | XTPAXFA11 |
| **XTFR025DC_** | 16–25 | XTPAXLSAD | XTPR025DC1 | ② | (2) XTCE025C01_ | XTPAXFA11 |
| **XTFR032DC_** | 25–32 | XTPAXLSAD | XTPR032DC1 | ② | (2) XTCE032C01_ | XTPAXFA11 |
| **XTFR Frame D MMP + Frame D Contactor** | | | | | | |
| **XTFR040DD_** | 32–40 | XTPAXLSAD | XTPR040DC1 | ③ | (2) XTCE040D00_ | XTPAXFA11 |
| **XTFR050DD_** | 40–50 | XTPAXLSAD | XTPR050DC1 | ③ | (2) XTCE050D00_ | XTPAXFA11 |
| **XTFR058DD_** | 50–58 | XTPAXLSAD | XTPR058DC1 | ③ | (2) XTCE065D00_ | XTPAXFA11 |
| **XTFR063DD_** | 55–65 | XTPAXLSAD | XTPR063DC1 | ③ | (2) XTCE065D00_ | XTPAXFA11 |

***Notes***

① Underscore (_) indicates magnetic coil suffix required. See **Page V5-T1-202**.

② The connection between the XTPR…DC1 and the XTCE…C_ contactor will be made with flexible wire and mounted to the DIN rail adapter plate (XTPAXTPCPD).

③ The reversing connection between the XTPR…DC1 and the (2) XTCE…C_ contactors will be accomplished by using the non-reversing combination connection kit (XTPAXTPCD), Frame D reversing link kit (XTCEXRLD), additional DIN rail adapter plate (XTPAXTPCPD) and DIN adapter connection element (XTPAXCNE).

## Manual Motor Controllers Short-Circuit Ratings for UL/CSA Group Installations

**XTSC and XTSR Manual Motor Controllers (MMC)**

| Assembled Controller ① | | FLA Adjustment Range/Overload Release— $I_r$ (Amps) | Short-Circuit Release— $I_{rm}$ (Amps) | Group Installation, UL/CSA Max. rms Symmetrical Short-Circuit Ratings (kA/kA with Current Limiter) | | | Maximum Upstream Protective Device (A/A with Current Limiter) | |
|---|---|---|---|---|---|---|---|---|
| Non-Reversing | Reversing | | | 240V | 480V | 600V | Maximum Fuse 600V | Maximum Circuit Breaker 600V |
| **XTSC and XTSR Frame B MMP + Frame B Contactor** | | | | | | | | |
| XTSCP16BB_ | XTSRP16BB_ | 0.1–0.16 | 2.2 | 50 | 50 | 50 | 600 | 600 |
| XTSCP25BB_ | XTSRP25BB_ | 0.16–0.25 | 3.5 | 50 | 50 | 50 | 600 | 600 |
| XTSCP40BB_ | XTSRP40BB_ | 0.25–0.4 | 5.6 | 50 | 50 | 50 | 600 | 600 |
| XTSCP63BB_ | XTSRP63BB_ | 0.4–0.63 | 8.82 | 50 | 50 | 50 | 600 | 600 |
| XTSC001BB_ | XTSR001BB_ | 0.63–1 | 14 | 50 | 50 | 50 | 600 | 600 |
| XTSC1P6BB_ | XTSR1P6BB_ | 1–1.6 | 22.4 | 50 | 50 | 50 | 600 | 600 |
| XTSC2P5BB_ | XTSR2P5BB_ | 1.6–2.5 | 35 | 50 | 50 | 50 | 600 | 600 |
| XTSC004BB_ | XTSR004BB_ | 2.5–4 | 56 | 50 | 50 | 50 | 600 | 600 |
| XTSC6P3BB_ | XTSR6P3BB_ | 4–6.3 | 88.2 | 50 | 50 | 50 | 600 | 600 |
| XTSC010BB_ | XTSR010BB_ | 6.3–10 | 140 | 22 | 22 | 22 | 150/600 | 125/600 |
| XTSC012BB_ | XTSR012BB_ | 8–12 | 168 | 10/50 | 10/50 | 10/50 | 150/600 | 125/600 |
| XTSC016BB_ | — | 10–16 | 224 | 10/50 | 10/50 | 10/50 | 150/600 | 125/600 |
| **XTSC and XTSR Frame B MMP + Frame C Contactor** | | | | | | | | |
| XTSC016BC_ | XTSR016BC_ | 10–16 | 224 | 10/50 | 10/50 | 10/50 | 150/600 | 125/600 |
| XTSC020BC_ | XTSR020BC_ | 16–20 | 280 | 10/18 | 10/18 | 10/18 | 150/600 | 125/600 |
| XTSC025BC_ | XTSR025BC_ | 20–25 | 350 | 10/18 | 10/18 | 10/18 | 150/600 | 125/600 |
| XTSC032BC_ | XTSR032BC_ | 25–32 | 448 | 5/18 | 5/18 | 5/18 | 150/600 | 125/600 |
| **XTSC and XTSR Frame D MMP + Frame C Contactor** | | | | | | | | |
| XTSC016DC_ | XTSR016DC_ | 10–16 | 224 | 50 | 50 | 10 | 600 | 600 |
| XTSC025DC_ | XTSR025DC_ | 16–25 | 350 | 50 | 50 | 10 | 600 | 600 |
| XTSC032DC_ | XTSR032DC_ | 25–32 | 448 | 50 | 50 | 10 | 600 | 600 |
| **XTSC and XTSR Frame D MMP + Frame D Contactor** | | | | | | | | |
| XTSC040DD_ | XTSR040DD_ | 32–40 | 560 | 50 | 50 | 10 | 600 | 600 |
| XTSC050DD_ | XTSR050DD_ | 40–50 | 700 | 50 | 50 | 10 | 600 | 600 |
| XTSC058DD | XTSR058DD_ | 50–58 | 812 | 50 | 50 | — | — | — |
| XTSC063DD_ | XTSR063DD_ | 55–65 | 882 | 50 | 50 | — | — | — |

***Note***

① Underscore (_) indicates magnetic coil suffix required. See **Page V5-T1-202**.

1

## Combination Motor Controllers Short-Circuit Ratings for UL 508 Type F Application

**XTFC and XTFR Combination Motor Controllers (CMC), UL 508 Type F**

| Assembled Controller ① | | FLA Adjustment Range/Overload Release— $I_r$ (Amps) | Short-Circuit Release— $I_{rm}$ (Amps) | UL 508 Type F Application Max. rms Symmetrical Short-Circuit Ratings (kA) | | | Maximum Upstream Protective Device (A) ② | |
|---|---|---|---|---|---|---|---|---|
| Non-Reversing | Reversing | | | 240V | 480/277V | 600/347V | Maximum Fuse 600V | Maximum Circuit Breaker 600V |
| **XTFC and XTFR Frame B MMP + Frame B Contactor** | | | | | | | | |
| **XTFCP16BB_** | **XTFRP16BB_** | 0.1–0.16 | 2.2 | 65 | 65 | — | Not required | Not required |
| **XTFCP25BB_** | **XTFRP25BB_** | 0.16–0.25 | 3.5 | 65 | 65 | — | Not required | Not required |
| **XTFCP40BB_** | **XTFRP40BB_** | 0.25–0.4 | 5.6 | 65 | 65 | — | Not required | Not required |
| **XTFCP63BB_** | **XTFRP63BB_** | 0.4–0.63 | 8.82 | 65 | 65 | — | Not required | Not required |
| **XTFC001BB_** | **XTFR001BB_** | 0.63–1 | 14 | 65 | 65 | — | Not required | Not required |
| **XTFC1P6BB_** | **XTFR1P6BB_** | 1–1.6 | 22.4 | 65 | 65 | — | Not required | Not required |
| **XTFC2P5BB_** | **XTFR2P5BB_** | 1.6–2.5 | 35 | 65 | 65 | — | Not required | Not required |
| **XTFC004BB_** | **XTFR004BB_** | 2.5–4 | 56 | 65 | 65 | — | Not required | Not required |
| **XTFC6P3BB_** | **XTFR6P3BB_** | 4–6.3 | 88.2 | 65 | 65 | — | Not required | Not required |
| **XTFC010BB_** | **XTFR010BB_** | 6.3–10 | 140 | 65 | 65 | — | Not required | Not required |
| **XTFC012BB_** | **XTFR012BB_** | 8–12 | 168 | 50 | 50 | — | Not required | Not required |
| **XTFC016BB_** | — | 10–16 | 224 | 50 | 50 | — | Not required | Not required |
| **XTFC and XTFR Frame B MMP + Frame C Contactor** | | | | | | | | |
| **XTFC016BC_** | **XTFR016BC_** | 10–16 | 224 | 18 | 18 | — | Not required | Not required |
| **XTFC020BC_** | **XTFR020BC_** | 16–20 | 280 | 18 | 18 | — | Not required | Not required |
| **XTFC025BC_** | **XTFR025BC_** | 20–25 | 350 | 18 | 18 | — | Not required | Not required |
| **XTFC032BC_** | **XTFR032BC_** | 25–32 | 448 | 18 | 18 | — | Not required | Not required |
| **XTFC and XTFR Frame D MMP + Frame C Contactor** | | | | | | | | |
| **XTFC016DC_** | **XTFR016DC_** | 10–16 | 224 | 65 | 65 | 50 | Not required | Not required |
| **XTFC025DC_** | **XTFR025DC_** | 16–25 | 350 | 65 | 65 | 50 | Not required | Not required |
| **XTFC032DC_** | **XTFR032DC_** | 25–32 | 448 | 65 | 65 | 50 | Not required | Not required |
| **XTFC and XTFR Frame D MMP + Frame D Contactor** | | | | | | | | |
| **XTFC040DD_** | **XTFR040DD_** | 32–40 | 560 | 65 | 65 | 50 | Not required | Not required |
| **XTFC050DD_** | **XTFR050DD_** | 40–50 | 700 | 65 | 65 | — | Not required | Not required |
| **XTFC058DD_** | **XTFR058DD_** | 50–58 | 812 | 65 | 65 | — | Not required | Not required |
| **XTFC063DD_** | **XTFR063DD_** | 55–65 | 882 | 65 | 65 | — | Not required | Not required |

***Notes***

① Underscore (_) indicates magnetic coil suffix required. See **Page V5-T1-202**.

② For UL 508 Type F applications, the combination motor controller assembly does not require a dedicated upstream protective device in the panel, thus a maximum rating is not required.

## Dimensions

Approximate Dimensions in mm [in]

### XTSC...BB_

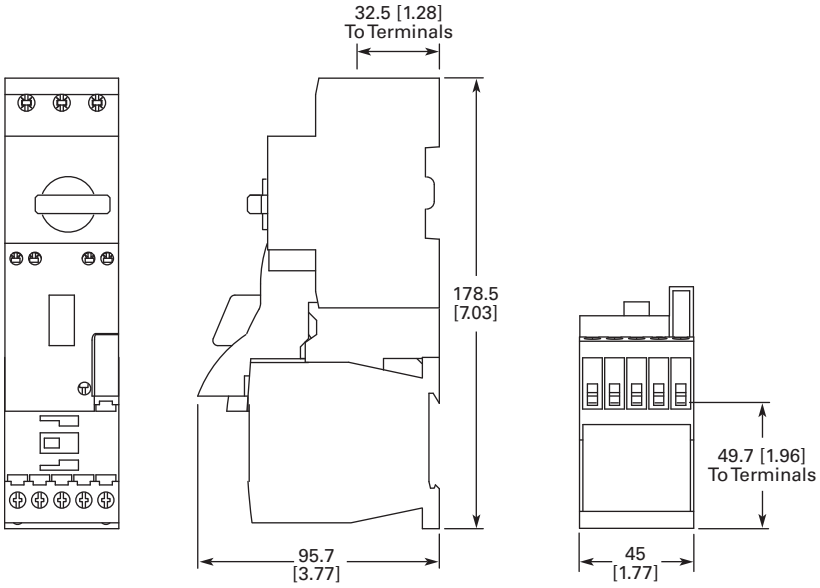


### XTSR...BB_

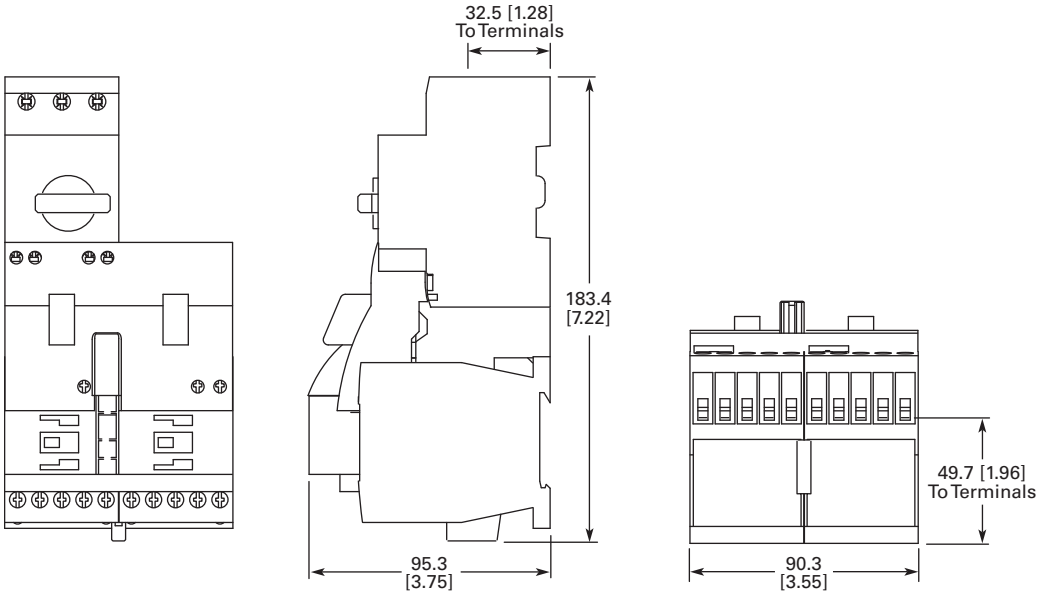

1

Approximate Dimensions in mm [in]

## XTSC...BC_

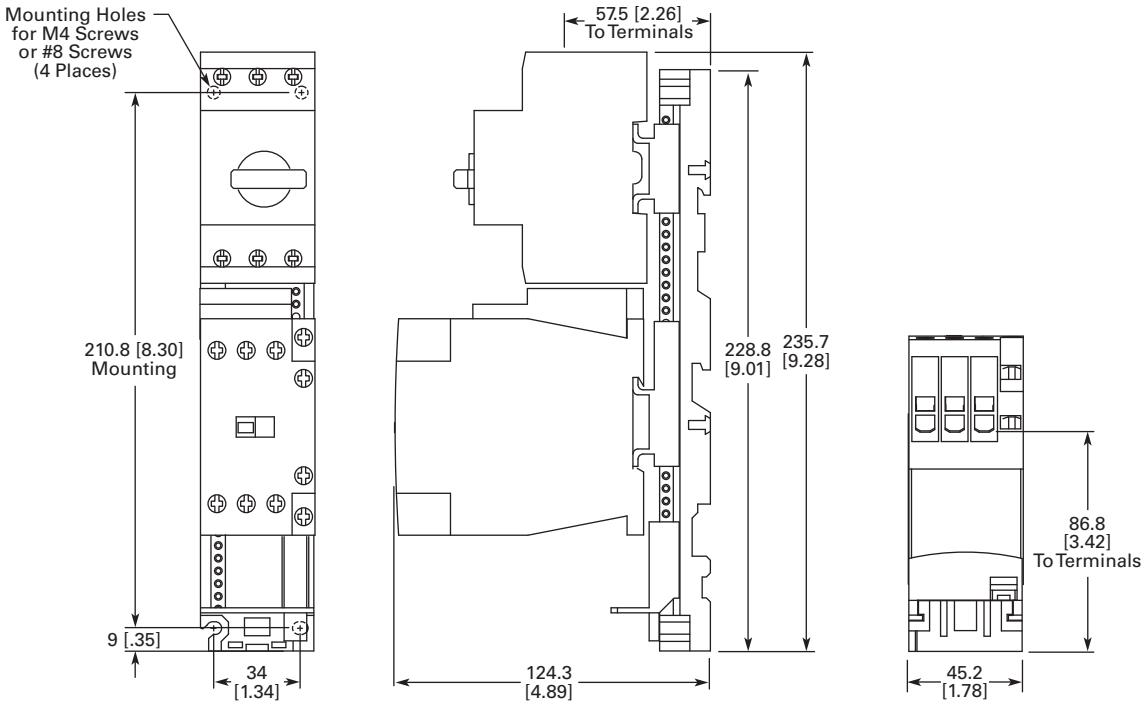


## XTSR...BC_

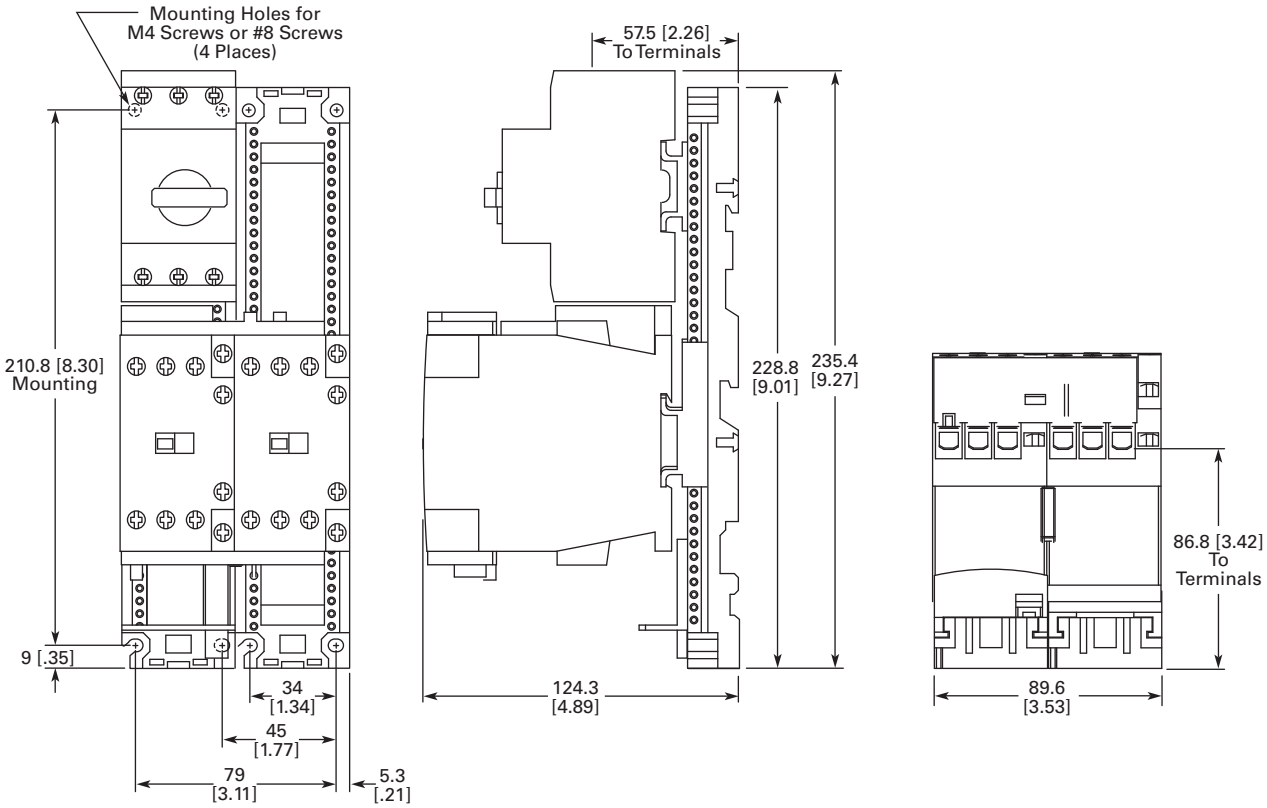

Approximate Dimensions in mm [in]

## XTSC...DD_

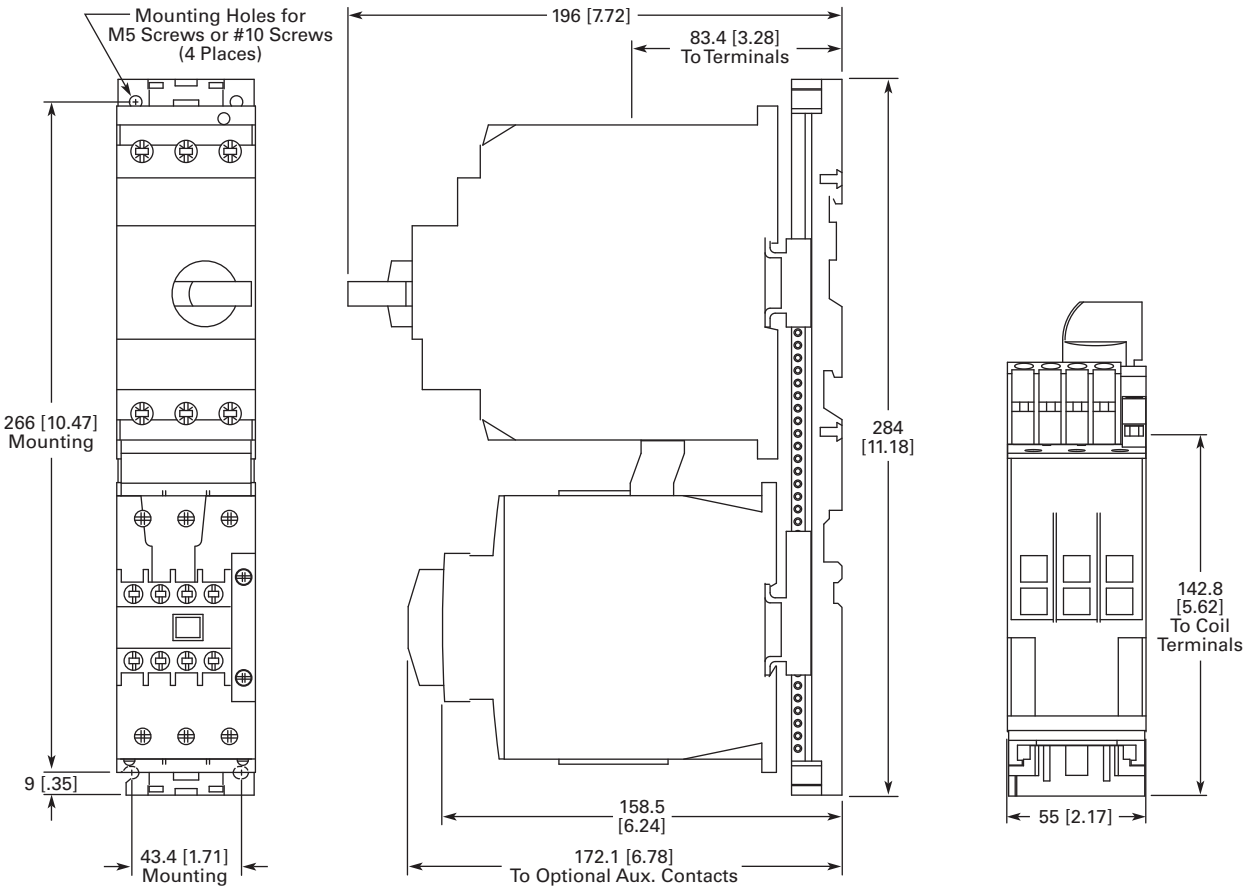


## XTFC...BB_

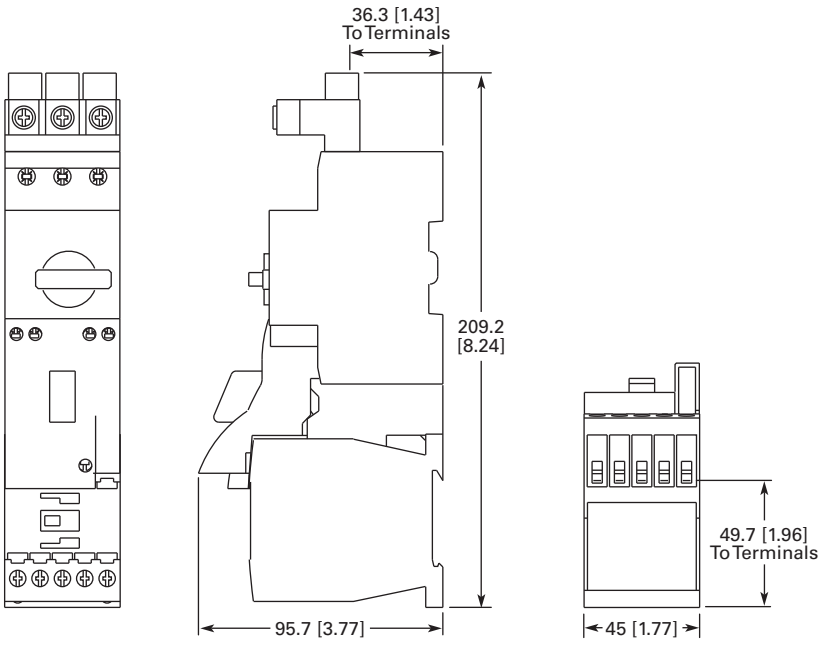

1

Approximate Dimensions in mm [in]

**XTFR...BB_**

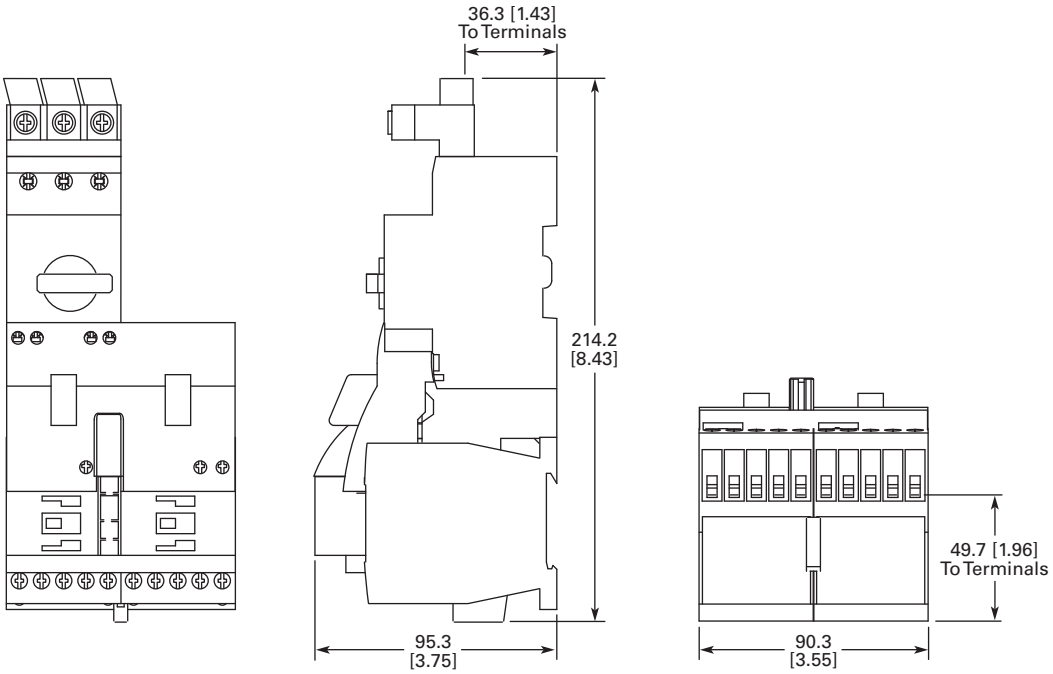


**XTFC...BC_**

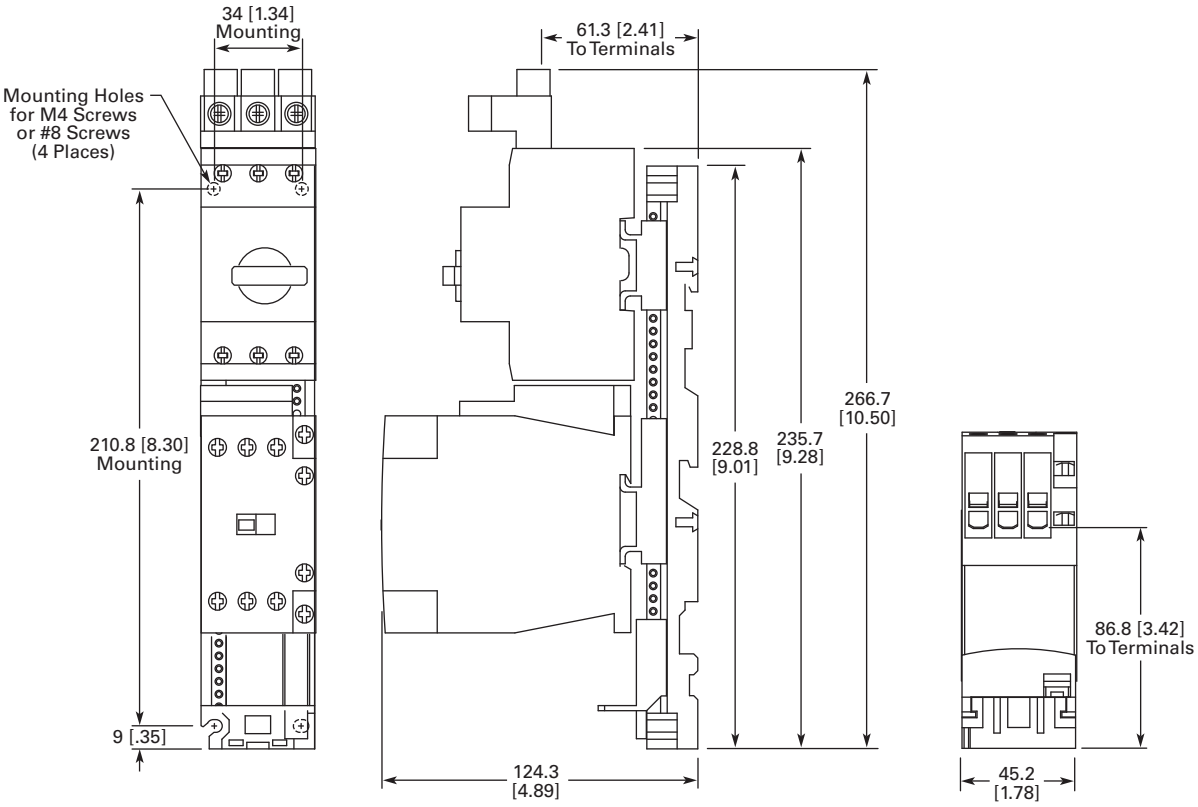

Approximate Dimensions in mm [in]

## XTFR...BC_

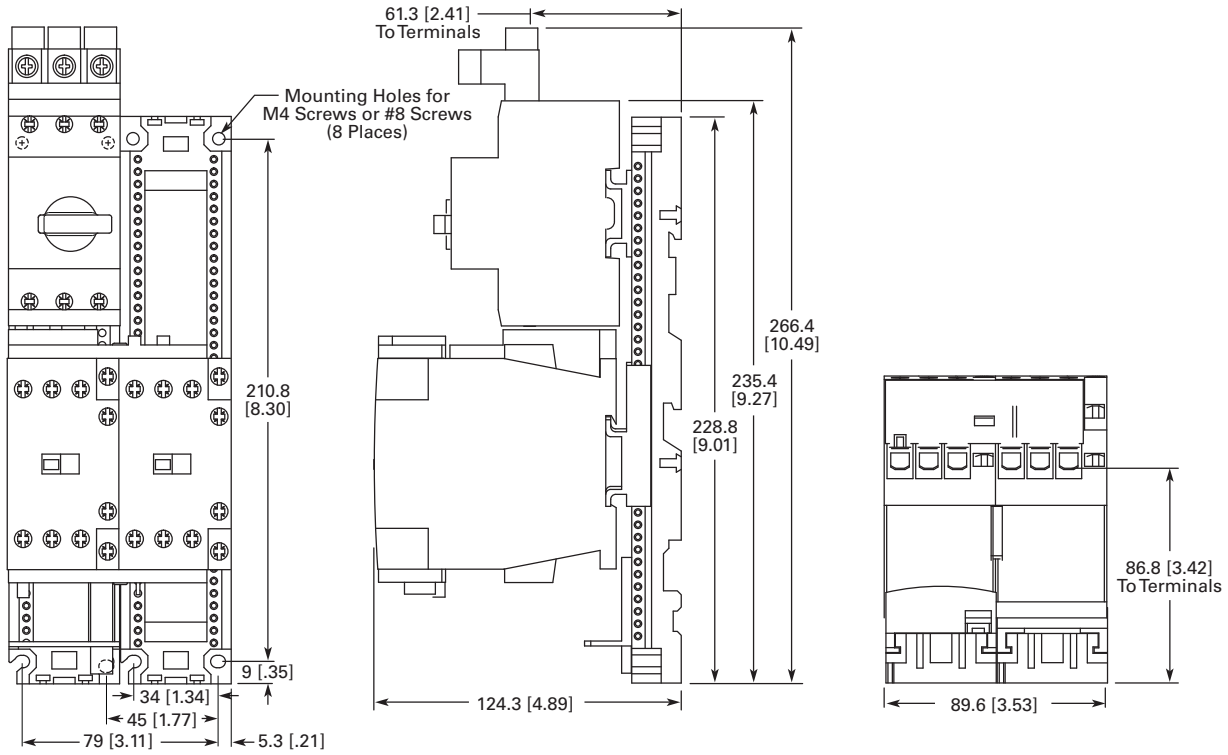


## XTFC...DD_

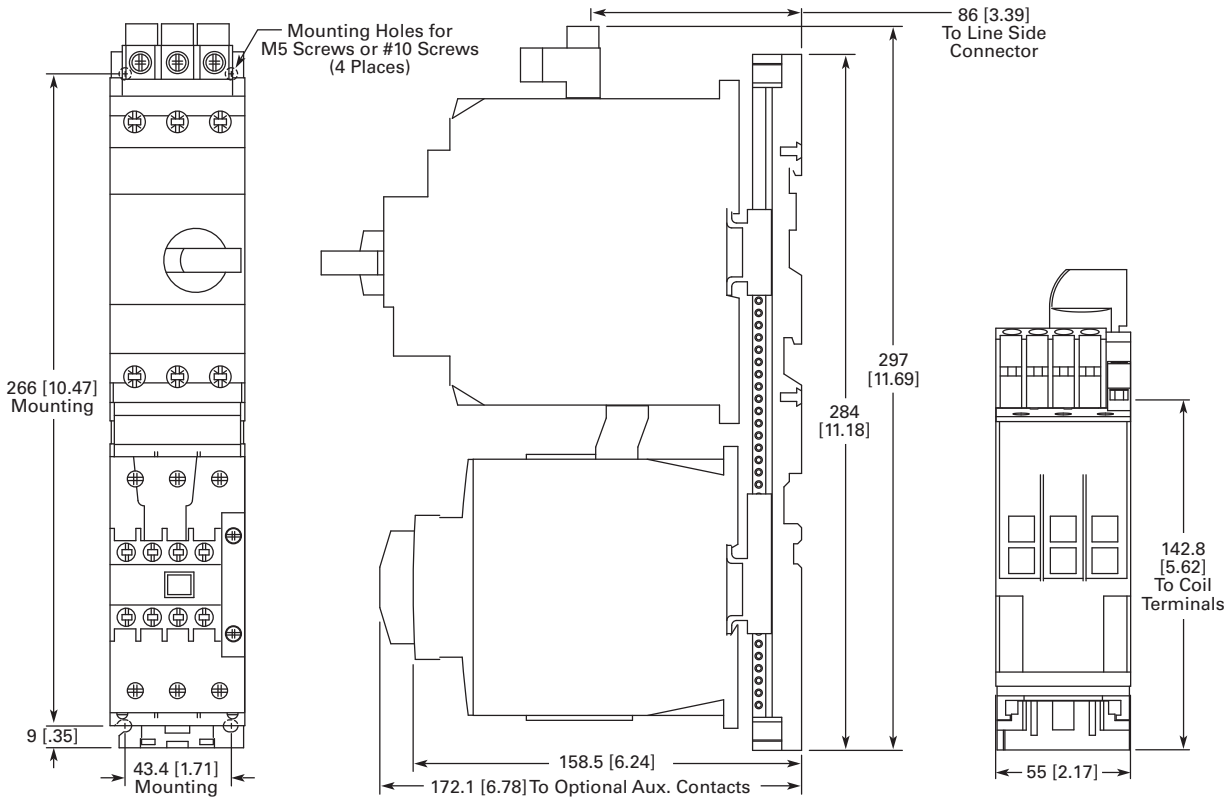

Courtesy of Steven Engineering, Inc. • 230 Ryan Way, South San Francisco, CA, 94080-6370 • Main Office: (650) 588-9200 • Outside Local Area: (800) 258-9200 • www.stevenengineering.com

# ISSC

# SOLID STATE TIMER AND CONTROL COMPONENT CATALOG

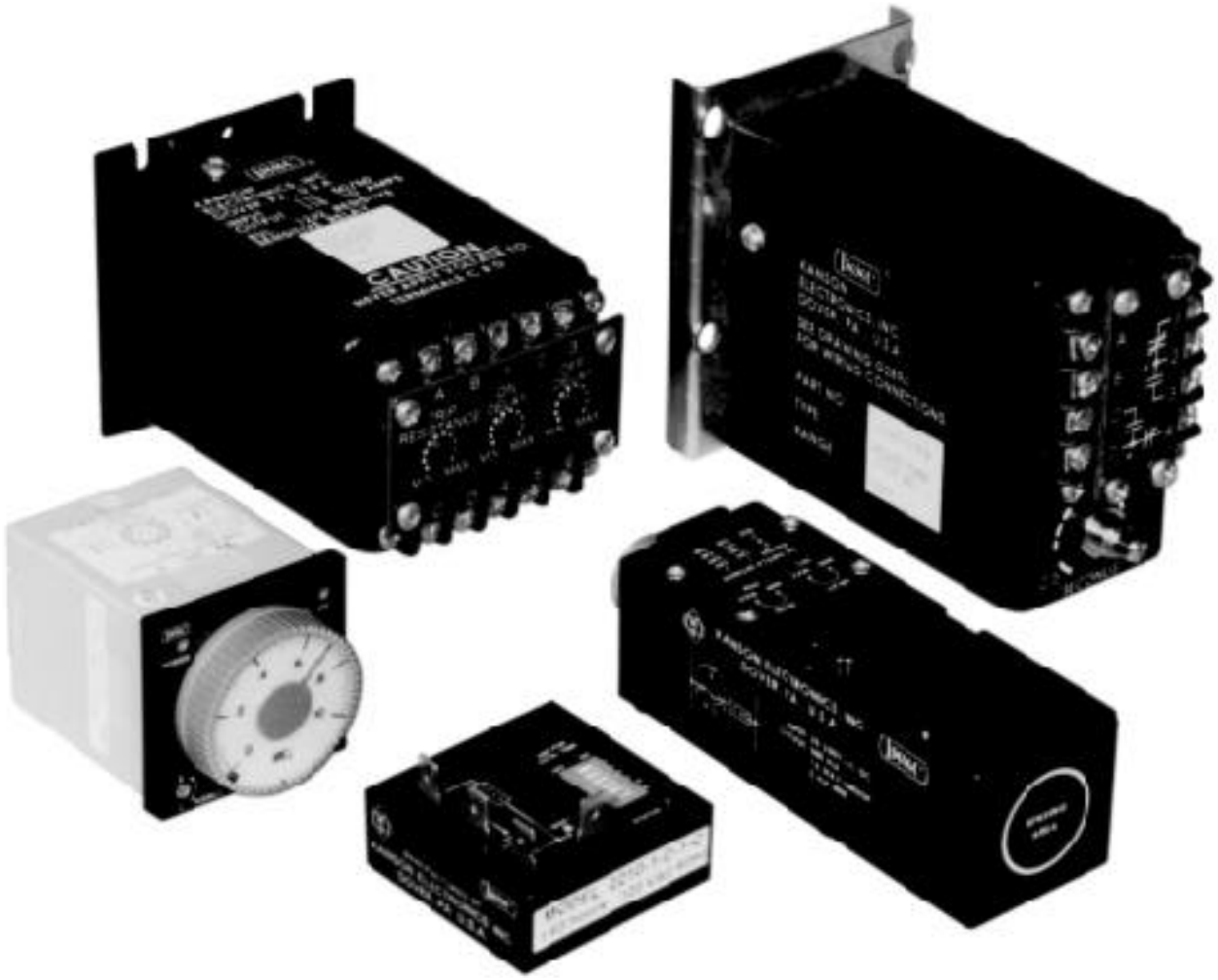

**http://www.issc-kanson.com/**

Courtesy of Steven Engineering, Inc. • 230 Ryan Way, South San Francisco, CA, 94080-6370 • Main Office: (650) 588-9200 • Outside Local Area: (800) 258-9200 • www.stevenengineering.com

# KANSON ELECTRONICS, INC.



1017-SP7
Utility Industry on delay timer with high voltage DC output. Time proven circuitry in a rugged metal can housing, functions reliably in the toughest environments.
See page 5.



2210 Non-volatile on delay timer suitable for machine maintenance applications. This same timer is also available with custom timing functions. See pages 16 and 17.



1248A our popular combination proximity sensor and motion detector in a compact limit switch housing. See page 29.

PLC watchdog applications.



Many designers are specifying external watchdog timers in PLC systems. The 1217 motion detector is an ideal selection for this application. It is available with a 24V AC/DC power supply for use in low voltage systems. See page 28.



1232 Resistance detector with built-in time delays, eliminate problems caused by part bounce or poor initial contact. See page 36.



Analog setting dials
pages 18 thru 21

## New to this catalog!

DIN style timers in both analog and digital versions.

Pushbutton setting controls
pages 22 thru 24



# CONTENTS

**TIMING FUNCTIONS** . . . . . ii
**SELECTOR GUIDES** . . . . . iv
**GLOSSARY** . . . . . vi
**REMOTE ADJUST CALCULATIONS** . . . . . vii
**TIMERS**
Model 1010 Base mount . . . . . 1
Model 1013 Base mount . . . . . 2
Model 1014 Base mount w/instant contacts . . . . . 3
Model 1017 Plug-in, on delay . . . . . 4
Model 1017 SP7 Base mount, on delay . . . . . 5
Model 1018 Plug-in . . . . . 6
Model 1019 Plug-in on delay . . . . . 7
Model 1030 Base mount, dual adjust . . . . . 8
Model 1060 Base mount, dual adjust, repeat cycle . . . . . 9
Model 1061 Base mount, dual adjust, repeat cycle . . . . . 10
Model 1071 Plug-in, on delay . . . . . 11
Model 2110 Block, on delay, DIP switch setting . . . . . 12
Model 2112 Block, on delay, pot setting . . . . . 13
Model 2115 Block, interval . . . . . 14
Model 2122 Block, dual input one-shot . . . . . 15
Series 2200 Block, semicustom . . . . . 16
Model 2210 Block, non-volatile on delay . . . . . 17
**DIN STYLE TIMERS AND COUNTER**
Model 1068 Repeat cycle . . . . . 18
Model 1073 Programmable or On delay only . . . . . 19
Model 1081 True off delay . . . . . 20
Model 1090 Multifunction . . . . . 21
Model 1095 Multifunction digital . . . . . 22
Model 1096 Multifunction digital dual . . . . . 23
Model 1105C Counter . . . . . 24
**MOTION DETECTORS OR PLC WATCHDOG TIMERS**
Model 1214 Base mount, underspeed, mechanical input . . . . . 27
Model 1217 Base mount, 24V supply, limit style prox switch . . . . . 28
Model 1248A Sensor and timer in limit style housing . . . . . 30
Model 1260 Base mount . . . . . 32
Model 1262 Base mount, MSHA approved . . . . . 33
**RESISTANCE/VOLTAGE DETECTORS**
Model 1213 Resistive or voltage sensitive relay . . . . . 35
Model 1230 Resistive sensitive switch . . . . . 36
Model 1232 Resistance detector with time delays . . . . . 37
Model 1234 Hi/lo resistance detector . . . . . 38
Model LLD-100/LLP-100 Liquid level detector and probe . . . . . 39
**PROXIMITY SWITCHES**
Model 1217P Limit style, see 1217 . . . . . 28
Model 1221 Limit style . . . . . 40
Model 1250 Limit style . . . . . 41
Model TMS-D Magnet sensor . . . . . 42
**ACCESSORIES**
Output devices . . . . . 43
Potentiometers and Related Hardware . . . . . 43
Sockets . . . . . 44
Miscellaneous Hardware . . . . . 45

Courtesy of Steven Engineering, Inc. • 230 Ryan Way, South San Francisco, CA, 94080-6370 • Main Office: (650) 588-9200 • Outside Local Area: (800) 258-9200 • www.stevenengineering.com

# TIMING FUNCTIONS

KANSON ELECTRONICS, INC.

Courtesy of Steven Engineering, Inc. • 230 Ryan Way, South San Francisco, CA, 94080-6370 • Main Office: (650) 588-9200 • Outside Local Area: (800) 258-9200 • www.stevenengineering.com

## Type 1 - On Delay

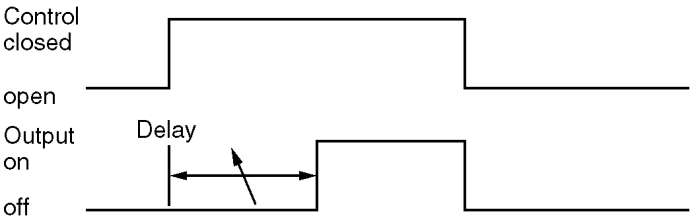


Adjustable time delay on energizing

- Closing the control circuit starts the time delay
- Opening the control circuit during timing resets time delay to zero - no accumulation of time delay or false output

## Type 2 - Off Delay

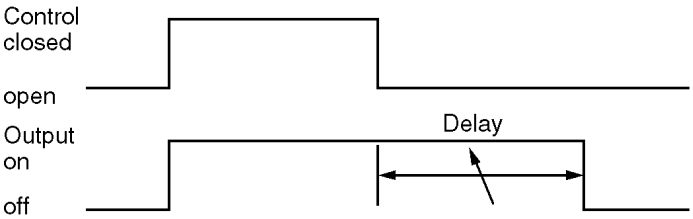


Adjustable time delay on de-energizing

- Closing the control circuit energizes output
- Opening the control circuit starts the time delay Reclosing the control circuit during timing resets time delay to zero no accumulation of time delay or false output

## Type 3 - Programmable

User programmable to either On Delay, Off Delay, Pulsed Interval, Maintained Interval or other function

## Type 4 - Pulsed Interval

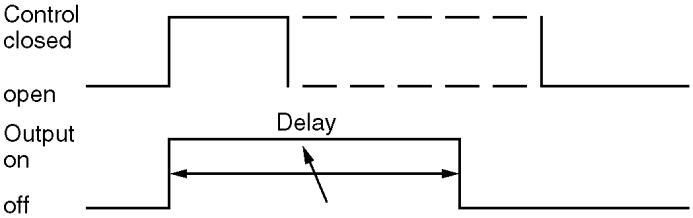


Adjustable time output pulse

- Closing the control circuit initiates timed output pulse
- Opening and closing the control circuit during timing will not effect timing or output

## Type 5 - Maintained Interval

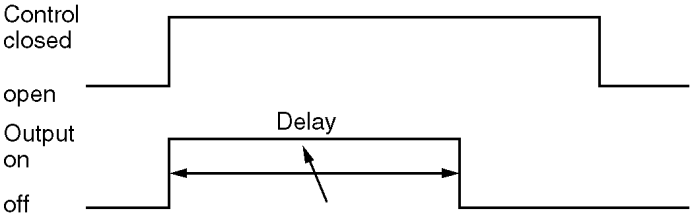


Adjustable timed output interval

- Closing the control circuit starts timed output interval
- Opening the control circuit during timing resets time delay to zero and de-energizes output

## Type 6 - Pulsed Off-On One Cycle

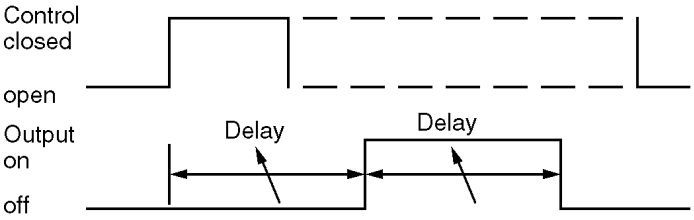


Adjustable dual time delay

- Closing the control circuit initiates timing sequence
- Opening and closing the control circuit during timing will not effect timing or output

## Type 7 - Maintained Off-On One Cycle

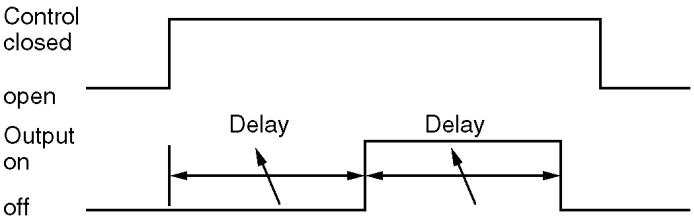


Adjustable dual time delay

- Closing the control circuit starts timing sequence
- Opening the control circuit during timing resets both time delays to zero and de-energizes output

## Type 8 - On Delay/Off Delay

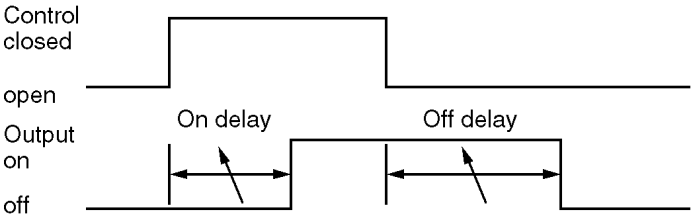


Adjustable dual time delay

- Closing the control circuit starts timing sequence
- Combines functions of On Delay and Off Delay into a single timer

## Type 9 - Repeat Cycle

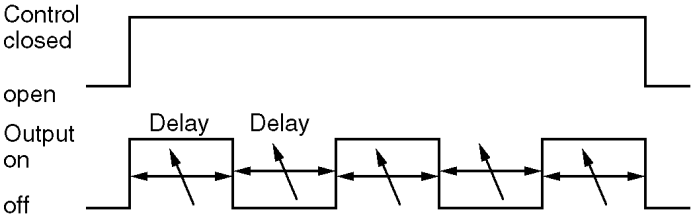


Adjustable dual time delay

- Closing the control circuit starts timing sequence
- Opening the control circuit during either timing period resets both time delays to zero and de-energizes output

::

KANSON ELECTRONICS, INC.

# TIMING FUNCTIONS

## Type E - Pulsed On Delay Latched

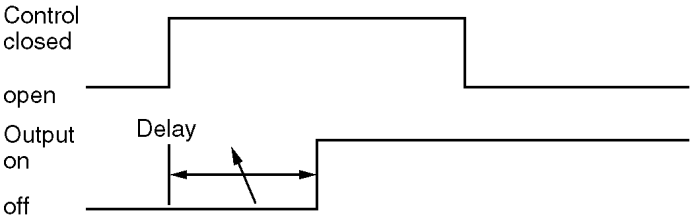


Adjustable dual time delay

- Closing the control circuit initiates timing sequence
- Opening and closing the control circuit during timing will not effect timing or output

## Type OC - One Cycle, Maintained Interval

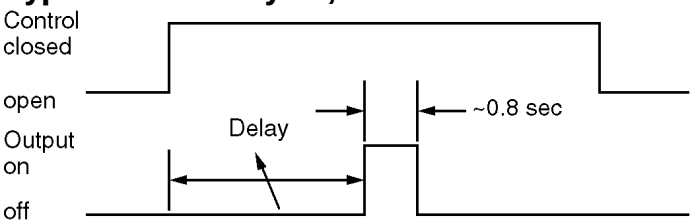


Fixed time (0.8 sec.) output pulse

- Closing the control circuit starts the timing sequence. The output contacts change state for 0.8 sec. after time delay is completed
- Opening the control circuit during timing resets the time delay to zero

## Type G - On Delay, Time Totalizing

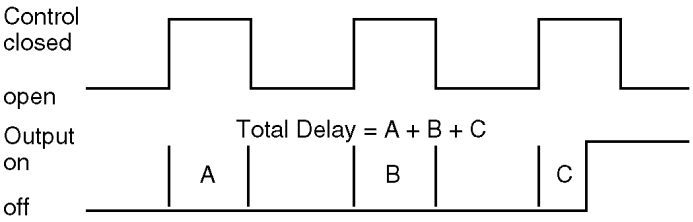


Adjustable time delay on energizing

- Closing the control circuit starts the timing sequence
- Opening control circuit during timing stops the timing sequence but does not reset the time accumulated
- Upon time-out, the output will remain latched until reset.

## Type Total A - Maintained On Delay/Off Delay One Cycle, Time Totalizing

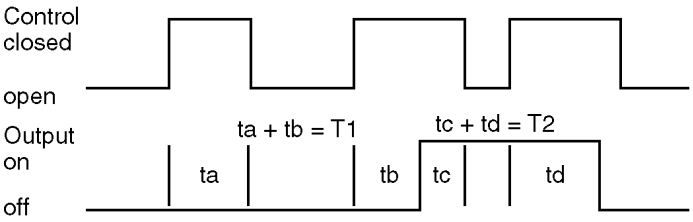


Programmable dual time delay

- Closing control circuit starts timing sequence
- Opening the control circuit during either timing period stops the timing sequence but does not reset the time accumulated
- Reset is achieved via external reset control

## Type Total B - Repeat Cycle, Start Off Time Totalizing

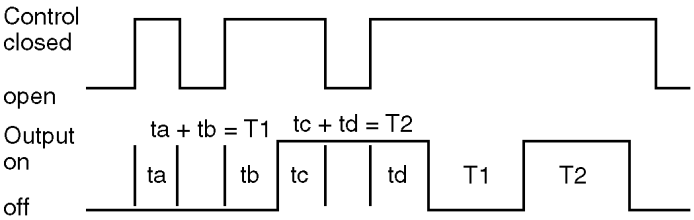


Programmable dual time repeat cycle

- Closing control circuit starts timing sequence
- Opening the control circuit during either timing period stops the timing sequence but does not reset the time accumulated
- Reset is achieved via external reset control

## Type Total C - Repeat Cycle, Start On Time Totalizing

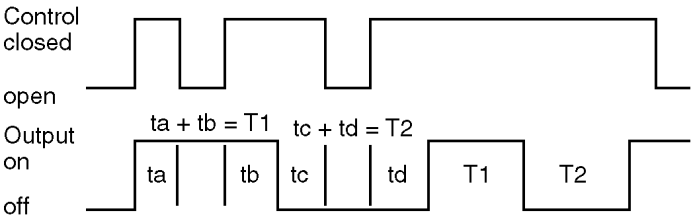


Programmable dual time repeat cycle

- Closing control circuit starts timing sequence
- Opening the control circuit during either timing period stops the timing sequence but does not reset the time accumulated
- Reset is achieved via external reset control

Courtesy of Steven Engineering, Inc. • 230 Ryan Way, South San Francisco, CA, 94080-6370 • Main Office: (650) 588-9200 • Outside Local Area: (800) 258-9200 • www.stevenengineering.com

# SELECTOR GUIDES

KANSON ELECTRONICS, INC.

## TIMERS

| Timing Function | Time Range Capability | Mounting | | | | Input | Output | Model |
|---|---|---|---|---|---|---|---|---|
| | | Base | Plug-in | Block | Panel | | | |
| Type 1 On Delay | 0.06-500 secs | X | | | | AC | R/SS(1) | 1010 |
| | | X | | | | AC | R | 1013 |
| | | X | | | | AC | R(3) | 1014 |
| | 0.025-10 secs | | | | | AC | R | 1017 |
| | 0.02-300 secs | X | | | | AC/DC | R | 1017 SP7 |
| | 0.02-500 secs | | X | | | AC/DC | R | 1019 |
| | 0.025-2000 secs(2) | | X | | | AC/DC | R | 1071 |
| | 0.1-10230 sec | | | X | | AC/DC | SS | 2110 |
| | 0.02-100 hrs(2) | | X | | X | AC/DC | R | 1073 |
| | 0.1 sec-1000 min | | | X | | AC | SS | 2112 |
| | 1 min-6300 days | | | X | | AC | SS | 2210 |
| Type 2 Off Delay | 0.06-500 secs | X | | | | AC | R/SS(1) | 1010 |
| | | X | | | | AC | R | 1013 |
| | | X | | | | AC | R(3) | 1014 |
| | 0.06-1000 secs | | X | | | AC/DC | R | 1018 |
| | 0.02-500 secs | | X | | X | AC/DC | R | 1081 |
| Type 3 Programmable | 0.1 sec-500 hrs | | X | | X | AC/DC | R | 1073 |
| | 0.02 sec-100 hrs | | X | | X | AC/DC | R | 1090 |
| | 0.01 sec-9,999 hrs | | X | | X | AC/DC | R/SS | 1095 |
| | 0.02 sec-9,999 hrs | | X | | X | AC/DC | R/SS | 1096 |
| | Counter | | X | | X | AC/DC | R/SS | 1105C |
| Type 4 Pulsed Interval | 0.06-500 secs | X | | | | AC | R/SS(1) | 1010 |
| | | X | | | | AC | R | 1013 |
| | 0.06-1000 secs | | X | | | AC/DC | R | 1018 |
| Type 5 Maintained Interval | 0.06-500 secs | X | | | | AC | R/SS(1) | 1010 |
| | | X | | | | AC | R | 1013 |
| | 0.06-1000 secs | | X | | | AC/DC | R | 1018 |
| | 0.1-10230 secs | | | X | | AC | SS | 2115 |
| Types 6 & 7 Pulsed/Maintained Off/On One Cycle | 0.06-500 secs | X | | | | AC | R/SS(1) | 1030 |
| Type 8 On Delay/Off Delay | 0.06-500 secs | X | | | | AC/DC | R/SS(1) | 1030 |
| Type 9 Repeat Cycle | 0.06-500 secs | X | | | | AC | R/SS(1) | 1060 |
| | 0.06-500 secs | X | | | | AC/DC | SS | 1061 |
| | 0.02 sec - 100 hr(2) | | X | | X | AC/DC | R | 1068 |

Notes:
(1) R=relay SS=solid state R/SS=relay standard, solid state optional.
(2) Programmable time ranges.
(3) Timed and instant contacts.

Courtesy of Steven Engineering, Inc. • 230 Ryan Way, South San Francisco, CA, 94080-6370 • Main Office: (650) 588-9200 • Outside Local Area: (800) 258-9200 • www.stevenengineering.com

KANSON ELECTRONICS, INC.

# SELECTOR GUIDES

## MOTION DETECTORS

| Sensor Application | Adjustment Range | Operating Speed | Mechanical Input | Prox Input | Model |
|---|---|---|---|---|---|
| Zero Speed | 0.06-100 secs | 1,080 ppm | X | | 1214 |
| | 5-5000 ppm(1) | 12,000 ppm | Self contained | | 1248A |
| | 0.06-500 secs | 2,400 ppm | X | X | 1260 |
| | 0.02-1000 secs | 108,000 ppm | X | X | 1262 |
| Underspeed | 5-5000 ppm | 12,000 ppm | Self contained | | 1248A |
| | 0.02-1000 secs | 108,000 ppm | X | X | 1262 |
| | 0.06-100 secs | 1080 ppm | X | X | 1217 |
| Overspeed | 5-5000 ppm | 12,000 ppm | Self contained | | 1248A |
| | 0.02-1000 secs | 108,000 ppm | X | X | 1262 |

Notes:
(1) ppm = pulses per minute

## PLC WATCHDOG TIMERS

| Adjustment Range | Power Supply | Output | Model |
|---|---|---|---|
| 0.06-500 secs | 120 VAC | Relay | 1260 |
| 0.06-100 secs | 24 VAC/DC | Relay | 1217C |
| 0.06-100 secs | 120 VAC | Relay | 1217C |
| 0.02-1000 secs | 120 VAC | Relay | 1262 |

## RESISTANCE/VOLTAGE DETECTORS

| Special Features | Base Mount | Plug-in | Input | Output | Model |
|---|---|---|---|---|---|
| Voltage detection | X | | AC | R | 1213 |
| Compact size | | X | AC | SS | 1230 |
| Time delays | X | | AC/DC | R | 1232 |
| High/low detection | X | | AC/DC | R | 1234 |
| Liquid level detection | X | | AC | SS | LLD-100 |

## PROXIMITY SWITCHES

| Type | Style | Supply | Output | Model |
|---|---|---|---|---|
| Inductive | Limit switch | 10-40 VDC | 100 mA | 1217P |
| Inductive | Limit switch | 10-26 VDC | 100 mA | 1221 |
| Inductive | Limit switch | 20-250 VAC/DC | 500 mA | 1248A(1) |
| Inductive | Limit switch | 20-250 VAC/DC | 500 mA | 1250 |
| Magnetic | Cylindrical | 9-26 VDC | 100 mA | TMS-D |

Notes:
(1) with built in motion detector timer circuitry

Courtesy of Steven Engineering, Inc. • 230 Ryan Way, South San Francisco, CA, 94080-6370 • Main Office: (650) 588-9200 • Outside Local Area: (800) 258-9200 • www.stevenengineering.com

# GLOSSARY



**CSA** (Canadian Standards Association) The agency for testing and approving products sold in Canada.

**INSTANT CONTACTS** Relay contacts which energize or de-energize in conjunction with the input power switch or control device. These contacts operate independently of the timed contacts and can be used to control a separate function.

**MAINTAINED INTERVAL** A delay which energizes an output for a preset period of time. The control switch or input power must be maintained during the timing interval to complete the delay. This timing function is also known as interval delay, or interval ON.

**MOTION DETECTOR** A device to detect zero, underspeed or overspeed conditions of pumps, conveyors, blower fans and other similar equipment which requires proper machine speed.

**MOV** (metal oxide varistor) A component which provides transient protection.

**OFF DELAY** A delayed de-energization of an output. The delay begins when the control switch is opened. This timing function is also known as delay on break, delay on release, delay on de-energization or slow release.

**ON DELAY** A delayed energization of an output. The delay begins when the control switch is closed or power applied to the input. This timing function is also known as a time delay, delay on make, delay on operate, delay on energization, or slow operate.

**ON DELAY/OFF DELAY** This timing function is a combination of on delay and off delay.

**POWER ACTUATION** The control of a timing function through the application or removal of input power.

**PULSED INTERVAL** A delay which energizes an output for a preset period of time. The control switch must close only momentarily to initiate this delay. This timing function is also known as a single shot,one shot, pulse stretcher, or latching interval.

**RANGE TOLERANCE** Factory calibration of time range at room temperature and nominal input voltage.

**REPEAT ACCURACY** The maximum deviation in the time setting of a timer when operated under constant conditions (constant ON/OFF times, input voltage and temperature). The average of five consecutive operations, starting with the second operation, will serve as the reference for determining the maximum deviation.

**REPEAT CYCLE** A timing function in which the output is turned ON and OFF repeatedly as long as the control switch is closed or power remains applied to the input. This timing function is also known as a recycle timer or flasher.

**RESET TIME** The minimum period of time the timer requires to prepare for a new cycle.

**TIMING VARIATION VS TEMPERATURE** The timing change relative to a reference time delay at any temperature within specified limits. The reference time delay is based on five consecutive operations starting with the second operation and is measured at approximately 23°C, with constant ON/OFF times and input voltage.

**TOLERANCE** The variation in a quantity from specified values or times.

**TRANSIENT PROTECTION** Internal protection which prevents damage to the circuit from sudden changes in voltage.

**UL** (Underwriter's Laboratories, Inc.) The agency for testing and approving products sold in the United States.

Courtesy of Steven Engineering, Inc. • 230 Ryan Way, South San Francisco, CA, 94080-6370 • Main Office: (650) 588-9200 • Outside Local Area: (800) 258-9200 • www.stevenengineering.com

# REMOTE ADJUST CALCULATIONS

Courtesy of Steven Engineering, Inc. • 230 Ryan Way, South San Francisco, CA, 94080-6370 • Main Office: (650) 588-9200 • Outside Local Area: (800) 258-9200 • www.stevenengineering.com

An external timing potentiometer (pot) wired to remote adjust terminals can be used to adjust the time setting from a remote location; to extend the time range of the unit; or to act as a vernier control. Determining the resistance value of the unit's internal pot is necessary for selecting the proper external pot. Calculate resistance value as follows:

1) Determine time range of unit.
   example : 0.06 - 5 secs
2) Determine from specifications the timing ramp (Ω/sec ratio) for that time range. The timing ramp is specified with the minimum time of the time range.
   example : 0.06 -100kΩ/sec
3) Multiply timing ramp by maximum time of time range.
   example : 100kΩ/sec x 5 sec = 500kΩ
4) The product is the resistance value of the unit's internal pot.

Remote adjustment is useful in applications requiring frequent time setting changes due to machine variations or changes in machine function. The external pot can be run from the control cabinet to the work station where time variations occur. Install external pot for remote adjustment as follows:

1) Wire a remote pot of the same resistance value as the unit's internal pot to the remote adjust terminals (remove jumper between terminals).
2) Set unit's internal pot at minimum setting. The remote pot will then provide the same time range as the unit.

The time range of a unit can be extended if an application occasionally requires a slightly longer time than the unit is capable of providing. This capability should be used for minimal time range extensions only. Install external pot for extending time range as follows:

1) Wire a remote pot of the same resistance value as the unit's internal pot to the remote adjust terminals.
2) The internal and external pots are wired in series, so their resistance value is additive and provides an extended time range. Add time ranges of both pots to determine new time range.
   example : Time range of pots is 0.06 - 5 secs.

   | | |
   |---|---|
   | Set internal pot at | 2 secs |
   | Set external pot at | 5 secs |
   | Total | 7 secs |

   Extended time range is 2 - 7 seconds.

Using an external pot as a vernier control provides fine adjustment of the time setting. Use in applications which require precise adjustment of slight changes in time setting. Install external pot for vernier control as follows:

1) Determine time range of unit.
   example : 0.06 - 5 secs
2) Determine range of variation in time setting.
   example : If time setting will vary between 3 and 4 seconds, range of variation in time setting is 1 second: therefore, an external pot is used to make time adjustments within a 1 second time period.
3) Determine timing ramp for unit (see specifications)
   example : 100kΩ/sec
4) Multiply timing ramp by range of variation in time setting.
   example : 100kΩ/sec x 1 sec = 100kΩ/sec)
5) The product is the resistance value of the external pot which will provide vernier control for a 1 second time period.
6) Set unit's internal pot for 3 seconds.
7) Use external pot for adjusting time between 3 and 4 seconds.

# NOTES



Courtesy of Steven Engineering, Inc. • 230 Ryan Way, South San Francisco, CA, 94080-6370 • Main Office: (650) 588-9200 • Outside Local Area: (800) 258-9200 • www.stevenengineering.com

# MODEL 1005 INDUSTRIAL SOLID STATE TIMER

BASE MOUNT

KANSON ELECTRONICS, INC.




**Panel Mount**
**General Purpose Relay**

## SPECIFICATIONS

**INPUT**

**VOLTAGE:** 24, 48, 120, or 250 V AC/DC
**FREQUENCY:** 50/60 Hz
**TOLERANCE (VOLTAGE):** +15% or -45% of rated
**POWER CONSUMPTION:** 10 VA maximum

**OUTPUT**

**TYPE:** Electromechanical relay
**RATING:** 10A—250VAC maximum
10A—125VDC maximum
**SWITCHING TIME:** 25ms operate time
25ms release time

**PHYSICAL**

**OPERATING TEMPERATURE:** -40° to 70°C
(-40° to 158°F)
**MOUNTING:** Base mount
**TERMINATION:** Terminal blocks on face of unit
**HOUSING:** Metal
**HI-POT:** 1500V terminals to case
1200V between open contacts
**CONTACT MATERIAL:** AgCdO
**SERVICE LIFE:** 100,000 switches minimum

## ORDERING DATA

**ORDERING CODE** **1005 — 1 — A— 1**

**BASIC MODEL NUMBER**
1005

**INPUT VOLTAGE**
1 24 V AC / DC
2 48 V AC / DC
3 120 V AC / DC
4 250 V AC / DC

**OUTPUT**
A DPDT
B 3PDT
C 4PDT

**FUNCTION**
1 General purpose relay

## WIRING

**OUTPUT C**

| | |
|---|---|
| A-B | Voltage input (constant) |
| 1-2 | Normally Open. |
| 2-3 | Normally Closed. |
| 5-4 | Normally Closed. |
| 5-6 | Normally Open. |
| 7-8 | Normally Open. |
| 9-8 | Normally Closed. |
| 11-10 | Normally Closed. |
| 11-12 | Normally Open. |

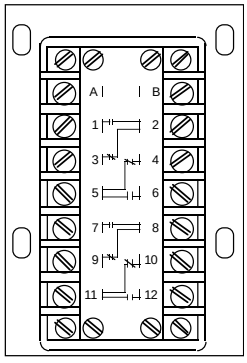


## DIMENSIONS Inches (millimeters)

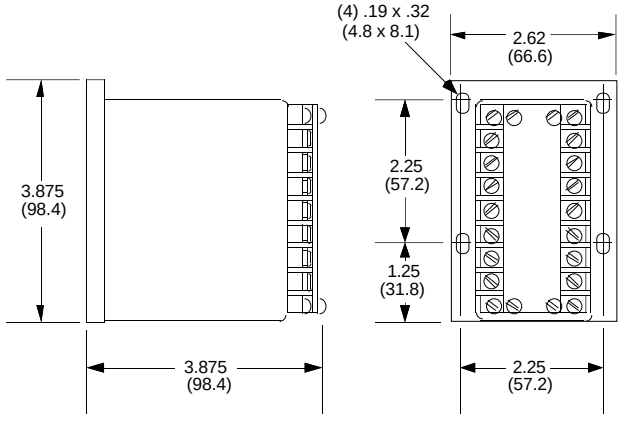

Courtesy of Steven Engineering, Inc. • 230 Ryan Way, South San Francisco, CA, 94080-6370 • Main Office: (650) 588-9200 • Outside Local Area: (800) 258-9200 • www.stevenengineering.com

ISSC
KANSON ELECTRONICS, INC.

# INDUSTRIAL SOLID STATE TIMER

# MODEL 1010 BASE MOUNT

## SPECIFICATIONS

**INPUT**

**VOLTAGE:** 120VAC, 230VAC
**FREQUENCY:** 50/60 Hz
**TOLERANCE (VOLTAGE):** ± 15% of nominal
**POWER CONSUMPTION:** 10 VA maximum
**TRANSIENT PROTECTION:** Isolation transformer

**OUTPUT**

**TYPE:** Electromechanical relay
(solid state available as accessory)
**RATING:** 10A @ 240VAC maximum

**TIMING**

**AVAILABLE TYPES:** On delay, Off delay,
Pulsed interval, Maintained interval
**REPEAT ACCURACY:** ± 1% of setting
**RESET TIME:** 50 msec minimum
**INDICATION:** Optional LED - ON when timing
(off delay - LED ON when output energized)
**TIMING RAMP:** 0.06 sec minimum time - 100kΩ/sec
0.5 sec minimum time - 10kΩ/sec
**TIME RANGE:** 0.06 to 500 secs in 12 ranges
**RANGE TOLERANCE:** ≤ 10% at max., ≤ 0% at min.
**CONTROL:** Isolated contact closure
**CONTROL TERMINALS:** E-F
**VOLTAGE PRESENT AT CONTROL TERMINALS:**
24VDC min., 40VDC max.

**PHYSICAL**

**OPERATING TEMP:** 0° to 50° C (32° to 120°F)
**TIMING VARIATION VS. TEMP:** ± 5% maximum
**MOUNTING:** Base mount
**TERMINATION:** Terminal blocks on face of timer
**HOUSING:** Metal

## WIRING

**OUTPUT B**

A-B Voltage input (constant)
C-D Remote adjust (jumper if not used)
E-F Control (starts timing function)
G-H Not used
1-3 N.O. timed
1-4 N.C. timed
5-8 N.C. timed
6-8 N.O. timed

***Caution:*** Never apply voltage to terminals C-D-E-F

Wiring Terminal Location

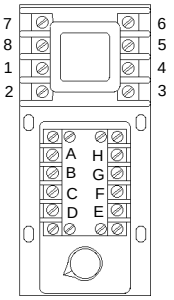


## DIMENSIONS Inches (millimeters)

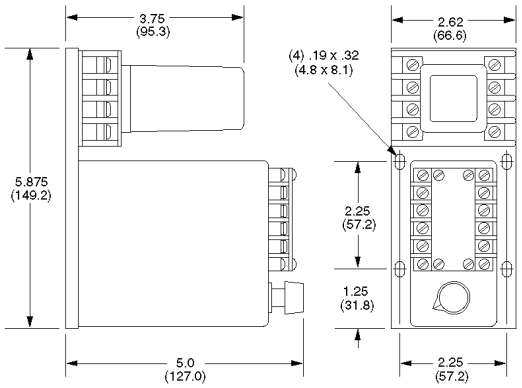




**Pulsed Interval** **On Delay**
**Maintained Interval** **Off Delay**

**Plug-in DPDT** relay output can be quickly replaced or interchanged with optional solid state output. The 1010 is especially useful in applications which require fast timing cycle rate and numerous operations in a short period of time.

## ORDERING DATA

**ORDERING CODE** **1010 - 1 - F - 2 - B OP6**

**BASIC MODEL NUMBER**
1010

**INPUT VOLTAGE**
1 120VAC
2 230VAC

**TIME RANGE** (Secs)

| | | | | | |
|---|---|---|---|---|---|
| A | 0.06-0.10 | F | 0.06-5.0 | L | 0.5-250 |
| B | 0.06-0.25 | G | 0.06-10.0 | M | 0.5-500 |
| C | 0.06-0.50 | H | 0.06-25.0 | W | Fixed time |
| D | 0.06-1.0 | J | 0.5-50.0 | | (see note) |
| E | 0.06-2.5 | K | 0.5-100 | | |

**NOTE:** Specify W and desired fixed time.
Factory will set time within 5%

**TIMING FUNCTION**
1 On delay 4 Pulsed interval
2 Off delay 5 Maintained interval

**OUTPUT**
B Relay DPDT
(solid state outputs available as accessories)

**OPTION** (If desired)
OP6 Timing indication light.

**APPLICABLE ACCESSORIES**
See accessory section for details

| | |
|---|---|
| Output modules | RP-101,RP-103 thru RP-106 |
| Potentiometers | RP-201 thru RP-210 |
| Reference dial | RP-216 |
| Locking attachment | RP-217 |

MODEL 1013 BASE MOUNT
INDUSTRIAL SOLID STATE TIMER
ISSC
KANSON ELECTRONICS, INC.

Courtesy of Steven Engineering, Inc. • 230 Ryan Way, South San Francisco, CA, 94080-6370 • Main Office: (650) 588-9200 • Outside Local Area: (800) 258-9200 • www.stevenengineering.com

**Models 1013UL and 1013CSA**

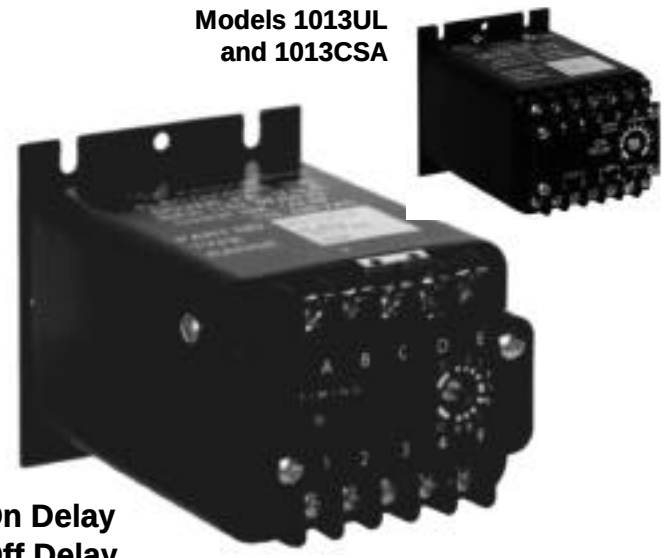

**Model 1013**

**On Delay**
**Off Delay**
**Pulsed Interval**
**Maintained Interval**

**All-Purpose Design** is economical and useful in a variety of industrial applications.

UL File No. E50957

CSA File No. LR92815

## ORDERING DATA

**ORDERING CODE** **1013 - 1 - G - 1 - B**

**BASIC MODEL NUMBER**
1013
1013UL
1013CSA

**INPUT VOLTAGE**
1 120VAC

**TIME RANGE** (Secs)

| | | | | | |
|---|---|---|---|---|---|
| A | 0.06-0.10 | F | 0.06-5.0 | L | 0.5-250 |
| B | 0.06-0.25 | G | 0.06-10.0 | M | 0.5-500 |
| C | 0.06-0.50 | H | 0.06-25.0 | W | Fixed time |
| D | 0.06-1.0 | J | 0.5-50.0 | | (see note) |
| E | 0.06-2.5 | K | 0.5-100 | | |

**NOTE:** Specify W and desired fixed time. Factory will set time within 5%

**TIMING FUNCTION**
1 On delay 4 Pulsed interval
2 Off delay *5 Maintained interval
*Not available on UL or CSA units

**OUTPUT**
B Relay 1 N.O. 1 N.C.
B1 Relay 2 N.O.
B2 Relay 2 N.C

**OPTION** (1013UL/CSA only, now included on 1013 units)
OP6 Timing indication light.

**APPLICABLE ACCESSORIES**
See accessory section for details

| | |
|---|---|
| Potentiometers | RP-201 thru RP-210 |
| Reference dial | RP-216 |

## SPECIFICATIONS

**INPUT**
**VOLTAGE:** 120VAC
**FREQUENCY:** 50/60 Hz
**TOLERANCE (VOLTAGE):** ± 15% of nominal
**POWER CONSUMPTION:** 10 VA maximum
**TRANSIENT PROTECTION:** Isolation transformer

**OUTPUT**
**TYPE:** Electromechanical relay
**RATING:** 10A @ 240VAC maximum

**TIMING**
**AVAILABLE TYPES:** On delay, Off delay, Pulsed interval, Maintained interval
**REPEAT ACCURACY:** ± 1% of setting
**RESET TIME:** 50 msec minimum
**INDICATION:** 1013 - LED,ON when timing
1013UL/1013CSA - Optional incandescent light, ON when timing (off delay - light ON when output energized)
**TIMING RAMP:** 0.06 sec minimum time - 100kΩ/sec
0.5 sec minimum time - 10kΩ/sec
**TIME RANGE:** 0.06 to 500 secs in 12 ranges
**RANGE TOLERANCE:** ≤ 10% at max., ≤ 0% at min.
**CONTROL:** Isolated contact closure
**CONTROL TERMINALS:** E-F
**VOLTAGE PRESENT AT CONTROL TERMINALS:** 24VDC minimum, 40VDC maximum

**PHYSICAL**
**OPERATING TEMP:** 0° to 50° C (32° to 120°F)
**TIMING VARIATION VS. TEMP:** ± 5% maximum
**MOUNTING:** Base mount
**TERMINATION:** Terminal block on face of timer
**HOUSING:** Metal

## WIRING

**OUTPUT B, B1, B2**
A-B Voltage input (constant)
C-D Remote adjust (jumper if not used)
E-F Control (starts timing function)
1-2 N.O. timed (except B2, N.C.)
3-4 N.C. timed (except B1, N.O.)

***Caution:*** Never apply voltage to terminals C-D-E-F

Wiring Terminal Location

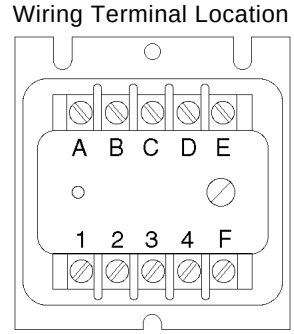


## DIMENSIONS Inches (millimeters)

1013 and 1013UL mounting dimensions are identical, Model 1013 shown

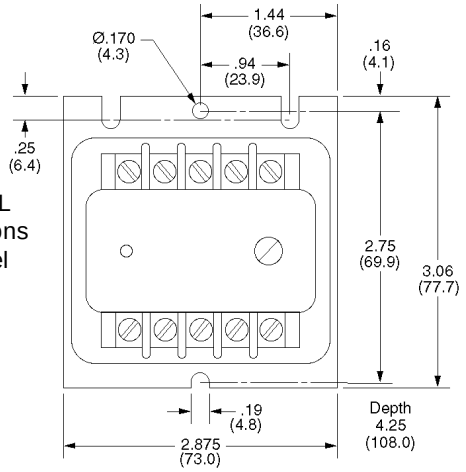

Courtesy of Steven Engineering, Inc. • 230 Ryan Way, South San Francisco, CA, 94080-6370 • Main Office: (650) 588-9200 • Outside Local Area: (800) 258-9200 • www.stevenengineering.com



# INDUSTRIAL SOLID STATE TIMER

# MODEL 1014 BASE MOUNT

## SPECIFICATIONS

**INPUT**

**VOLTAGE:** 120VAC
**FREQUENCY:** 50/60 Hz
**TOLERANCE (VOLTAGE):** ± 15% of nominal
**POWER CONSUMPTION:** 10 VA maximum
**TRANSIENT PROTECTION:** Isolation transformer

**OUTPUT**

**TYPE:** Two electromechanical relays
**RATING:** 10A @ 240VAC maximum

**TIMING**

**AVAILABLE TYPES:** On delay, Off delay
**REPEAT ACCURACY:** ± 1% of setting
**RESET TIME:** 50 msec minimum
**INDICATION:** LED, ON when timing
**TIMING RAMP:** 0.06 sec minimum time - 100kΩ/sec
0.5 sec minimum time - 10kΩ/sec
**TIME RANGE:** 0.06 to 500 secs in 12 ranges
**RANGE TOLERANCE:** ≤ 10% at max., ≤ 0% at min.
**CONTROL:** Isolated contact closure or AC proximity sensor
**CONTROL TERMINALS:** A-C
**VOLTAGE PRESENT AT CONTROL TERMINALS:** Same as input voltage

**PHYSICAL**

**OPERATING TEMP:** 0° to 50° C (32° to 120°F)
**TIMING VARIATION VS. TEMP:** ± 5% maximum
**MOUNTING:** Base mount
**TERMINATION:** Terminal blocks on face of timer
**HOUSING:** Metal

## WIRING

**OUTPUT A**

| | | |
|---|---|---|
| A-B Voltage input | 3-4 N.O. | instant |
| (constant) | 4-5 N.C. | instant |
| A-C Control | 6-7 N.O. | timed |
| (starts timing) | 7-8 N.C. | timed |
| 1-2 Remote adjust | 9-10 N.O. | timed |
| (jumper if not used) | | |

**OUTPUT B**

| | | |
|---|---|---|
| A-B Voltage input | 2-3 N.C. | instant |
| (constant) | 4-5 N.O. | instant |
| A-C Control | 6-7 N.O. | timed |
| (starts timing) | 7-8 N.C. | timed |
| 1-2 N.O. instant | 9-10 N.O. | timed |

Wiring Terminal Location

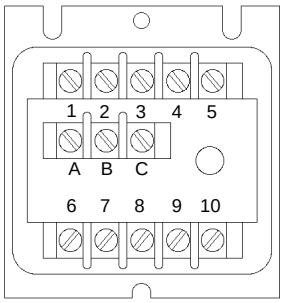


## DIMENSIONS Inches (millimeters)

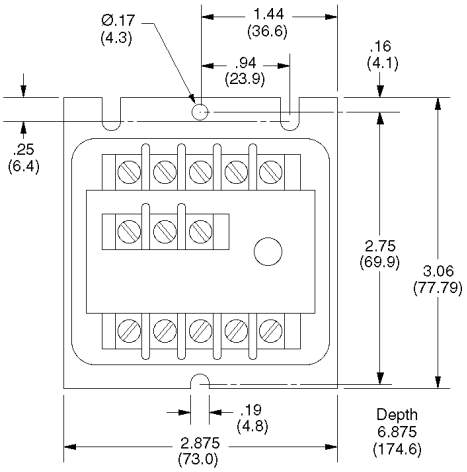




**On Delay**
**Off Delay**

**Instant Contacts** simplify the timing control circuit. A separate relay, which operates in conjunction with the input power switch or control device, can be used to operate a separate control function. Timing function controls timing relay.

**AC Control Circuit** is compatible with both standard mechanical switches and solid state proximity sensors.

UL File No. E50957

## ORDERING DATA

**ORDERING CODE** **1014 - 1 - F - 2 - B**

**BASIC MODEL NUMBER**
1014
1014UL

**INPUT VOLTAGE**
1 120VAC

**TIME RANGE** (Secs)

| | | | | | |
|---|---|---|---|---|---|
| A | 0.06-0.10 | F | 0.06-5.0 | L | 0.5-250 |
| B | 0.06-0.25 | G | 0.06-10.0 | M | 0.5-500 |
| C | 0.06-0.50 | H | 0.06-25.0 | W | Fixed time |
| D | 0.06-1.0 | J | 0.5-50.0 | | (see note) |
| E | 0.06-2.5 | K | 0.5-100 | | |

**NOTE:** Specify W and desired fixed time. Factory will set time within 5%

**TIMING FUNCTION**
1 On delay
2 Off delay

**OUTPUT**
A Instant Relay 1 SPDT
Timed Relay 1 SPDT, 1 N.O. { includes remote adjust connections
B Instant Relay 1 SPDT, 1 N.O.
Timed Relay 1 SPDT, 1 N.O.

**OPTION** (1014UL only, now included on 1014 units)
OP6 Timing indication light.

**APPLICABLE ACCESSORIES**
See accessory section for details

| | |
|---|---|
| Potentiometers | RP-201 thru RP-210 |
| Reference dial | RP-216 |
| Locking attachment | RP-217 |

# MODEL 1017 PLUG-IN

# INDUSTRIAL SOLID STATE TIMER

ISSC
KANSON ELECTRONICS, INC.




## On Delay

**Small, Plug-in Unit** saves space and installation time. **Input Power Actuates** timing sequence, eliminating the need for a separate control circuit. Removing power automatically resets timing sequence.

UL File No. E50957

CSA File No. LR92815

## ORDERING DATA

**ORDERING CODE** **1017 - 5 - 2 - 1 OP1**

**BASIC MODEL NUMBER**
1017

**TIME RANGE** (Secs)

| | |
|---|---|
| 1 | 0.025-1.0 |
| 2.5 | 0.025-2.5 |
| 5 | 0.025-5 |
| 10 | 0.1 - 10 |

See Model 1071 for other time ranges, outputs, and input voltages.

**OUTPUT**
1 Relay DPDT (8 pin plug)
2 Relay SPDT w/remote adjust (8 pin plug)

**INPUT VOLTAGE**
1 120VAC/DC

**OPTION** (If desired)
OP1 Omit potentiometer from unit (applies to output 2 only)
Timing indication light (previously OP10) is now standard on model 1017

**APPLICABLE ACCESSORIES**
See accessory section for details

| | |
|---|---|
| Potentiometers | RP-204, RP-207 thru RP-210 |
| Reference dial | RP-216 |
| Locking attachment | RP-217 |
| 8 pin socket | RP-302 |
| Hold down clip | RP-305 |

## SPECIFICATIONS

**INPUT**
**VOLTAGE:** 120VAC/DC
**FREQUENCY:** 50/60 Hz or DC
**TOLERANCE (VOLTAGE):** ± 10% of nominal
**POWER CONSUMPTION:** 5 VA maximum
**TRANSIENT PROTECTION:** MOV

**OUTPUT**
**TYPE:** Electromechanical relay
**RATING:** 5 A @ 240VAC maximum

**TIMING**
**AVAILABLE TYPES:** On delay
**REPEAT ACCURACY:** ± 1% of setting or 8 msec, whichever is greater.
**RESET TIME:** 40 msec minimum
**INDICATION:** LED - ON when timing
**TIMING RAMP:** 0.025 sec minimum time - 1MΩ/sec
0.1 sec minimum time - 100kΩ/sec
**TIME RANGE:** 0.025 to 10 secs in 4 ranges
**RANGE TOLERANCE:** ≤ 30% at maximum
≤ 0% at minimum
**CONTROL:** Power applied to input initiates timing cycle
**CONTROL TERMINALS:** 2-7
**VOLTAGE PRESENT AT CONTROL TERMINALS:** Same as input voltage

**PHYSICAL**
**OPERATING TEMP:** 0° to 50° C (32° to 120°F)
**TIMING VARIATION VS. TEMP:** ± 5% maximum or 8 msec, whichever is greater
**MOUNTING:** Plug-in
**TERMINATION:** 8 pin socket
**HOUSING:** Plastic

## WIRING

**OUTPUT 1**
2-7 Voltage input (control)
1-3 N.O. timed
1-4 N.C. timed
8-6 N.O. timed
8-5 N.C. timed

**OUTPUT 2**
2-7 Voltage input (control)
1-3 N.O. timed
1-4 N.C. timed
5-6 Remote adjust (jumper if not used)
8 Not used

***Caution:*** Never apply voltage to 5-6

Wiring Terminal Location
8 Pin Socket

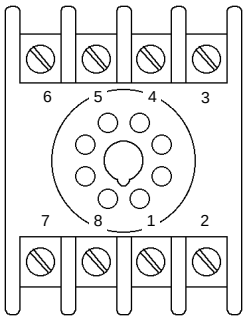


## DIMENSIONS Inches (millimeters)

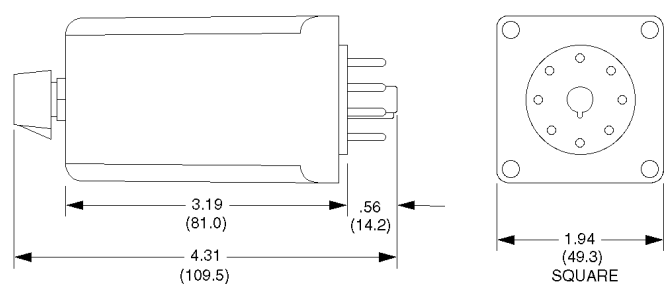


Courtesy of Steven Engineering, Inc. • 230 Ryan Way, South San Francisco, CA, 94080-6370 • Main Office: (650) 588-9200 • Outside Local Area: (800) 258-9200 • www.stevenengineering.com

Courtesy of Steven Engineering, Inc. • 230 Ryan Way, South San Francisco, CA, 94080-6370 • Main Office: (650) 588-9200 • Outside Local Area: (800) 258-9200 • www.stevenengineering.com

ISSC
KANSON ELECTRONICS, INC.
INDUSTRIAL SOLID STATE TIMER
MODEL 1017 SP7
BASE MOUNT

## SPECIFICATIONS

**INPUT**

**VOLTAGE:** 24V AC/DC, 48V AC/DC, 120VAC/125VDC, 240VAC/250VDC
**TOLERANCE (VOLTAGE):** ± 15% of nominal, ± 10% for 24V
**POWER CONSUMPTION:** 16 W maximum
**TRANSIENT PROTECTION:** MOV

**OUTPUT**

**TYPE:** Electromechanical relay
**RATING:** 3A @ 150 VDC maximum
10A @ 240 VAC 80% PF maximum

**TIMING**

**AVAILABLE TYPE:** On delay
**REPEAT ACCURACY:** ± 1% of setting
**RESET TIME:** 50 msec minimum
**TIME RANGE:** 1.5 to 120 cycles in 4 ranges or 0.5 to 300 sec in 4 ranges
**RANGE TOLERANCE:** ≤ 10% at maximum, ≤ 0% at minimum

**PHYSICAL**

**OPERATING TEMP:** -40° to 65° C (-40° to 150°F)
**TIMING VARIATION VS. TEMP:** ± 5% maximum
**MOUNTING:** Base mount
**TERMINATION:** Terminal blocks on face of timer
**HOUSING:** Metal
**HI-POT:** 1500V terminals to case, 1200V between open contacts

## WIRING

**OUTPUT A**
A-B Voltage input
1-2 N.C. timed(1 positive)
3-4 N.O. timed(4 positive)

**OUTPUT B**
A-B Voltage input
2-1 N.C. timed(2 positive)
2-3 N.O. timed(2 positive)
D-4 N.C. timed(D positive)
D-C N.O. timed(D positive)

In DC applications indicated polarity provides optimum arc supression

Wiring Terminal Location

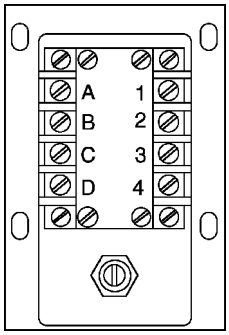


## DIMENSIONS Inches (millimeters)

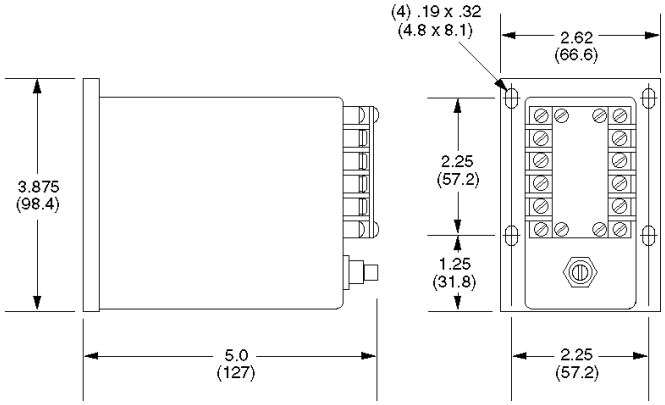




**On Delay**

**The 1017-SP7** is a special purpose on delay timer for electric utility applications capable of high voltage DC switching. It is equipped with transient protection and housed in a metal enclosure for maximum noise immunity. The timing dial is calibrated in AC cycles at 60Hz. or seconds.

## ORDERING DATA

**ORDERING CODE** **1017 SP7 - B - 4 - B**

**BASIC MODEL NUMBER**
1017-SP7

**INPUT VOLTAGE**
D 24V AC/DC
A 48V AC/DC
B 120VAC/125VDC
C 240VAC/250VDC

**TIME RANGE**
1 1.5-30 Cycles*
2 1.5-45 Cycles*
3 1.5-60 Cycles*
4 1.5-120 Cycles*
7 0.5-30 Seconds
8 0.5-60 Seconds
9 0.5-120 Seconds
10 0.5-300 Seconds
(*Cycles at 60Hz)

**TIMING FUNCTION**
On delay

**OUTPUT**
A Relay 1 N.O 1 N.C.
B Relay DPDT

**ACCESSORIES**
See accessory section for details

Locking attachment RP-217

# MODEL 1018 PLUG-IN

# INDUSTRIAL SOLID STATE TIMER

KANSON ELECTRONICS, INC.




## Off Delay
## Pulsed Interval
## Maintained Interval

**The Reliable** 1018 is a general purpose off delay timer. The standard unit can be converted to operate in pulsed interval timing function, or it can be ordered with option 13 to operate in the maintained interval timing function.

**Small, Plug-in Unit** saves space and installation time.

UL File No. E50957

## ORDERING DATA

**ORDERING CODE** **1018 - A - 1 OP13**

**BASIC MODEL NUMBER**
1018

**TIME RANGE** (Secs)

| | | | |
|---|---|---|---|
| A | 0.06-1.0 | L | 0.06-2.5 |
| B | 0.5-10.0 | M | 0.5-25.0 |
| C | 5-100 | N | 0.5-50.0 |
| D | 5-250 | R | 0.06-5.0 |
| E | 5-500 | | |
| J | 5-1000 | | |

**OUTPUT**
1 Relay DPDT (11 pin plug std, 8 pin for OP13)
2 Relay SPDT w/remote adjust (11 pin plug)

**OPTION** (If desired)
OP1 (Omit potentiometer from unit) Is now standard on the model 1018 with output 2.
OP4 24VAC/DC input
OP13 Maintained interval timing function - Type 5
(Only available with 8 pin plug and output 1)

**APPLICABLE ACCESSORIES**
See accessory section for details

| | |
|---|---|
| Potentiometers | RP-204, RP-207 thru RP-210 |
| Reference dial | RP-216 |
| Locking attachment | RP-217 |
| 8 pin socket | RP-302 |
| 11 pin socket | RP-303 |
| Hold down clip | RP-305 |

## SPECIFICATIONS

**INPUT**
**VOLTAGE:** 120VAC/DC, 24VAC/DC
**FREQUENCY:** 50/60 Hz or DC
**TOLERANCE (VOLTAGE):** ± 10% of nominal
**POWER CONSUMPTION:** 3 VA maximum
**TRANSIENT PROTECTION:** MOV

**OUTPUT**
**TYPE:** Electromechanical relay
**RATING:** 10 A @ 240VAC maximum

**TIMING**
**TYPES:** Off delay, Pulsed interval*, Maintained interval
**REPEAT ACCURACY:** ± 1% of setting or 8 msecs, whichever is greater.
**RESET TIME:** 50 msec minimum - Types 2 & 4, 100 msec minimum - Type 5
**INITIATE TIME:** 5 ms minimum - Types 2 & 4 only
**INDICATION:** LED - ON when timing
**TIMING RAMP:** 0.06 sec minimum time - 1MΩ/sec
0.5 sec minimum time - 100kΩ/sec
5 sec minimum time - 10kΩ/sec
**TIME RANGE:** 0.06 to 1000 secs in 10 ranges
**RANGE TOLERANCE:** ≤ 30% at maximum, ≤ 0% at minimum
**CONTROL:** Isolated contact closure
**CONTROL TERMINALS:** 5-6 (Types 2 and 4)
2-7(for option 13 - Type 5)
**VOLTAGE PRESENT AT CONTROL TERMINALS:**
70VDC (120VAC/DC - Types 2 and 4)
30VDC (24VAC - Types 2 and 4)
24VDC (24VDC - Types 2 and 4)
Same as input voltage (Type 5)
*Shipped as an off delay. Remove jumper clip (see dimensions) to convert to pulsed interval

**PHYSICAL**
**OPERATING TEMP:** 0° to 50° C (32° to 120°F)
**TIMING VARIATION VS. TEMP:** ± 5% maximum or 8 msec, whichever is greater (up to 500 secs)
**MOUNTING:** Plug-in
**TERMINATION:** 8 or 11 pin socket
**HOUSING:** Plastic

## WIRING

**OUTPUT 1**
2-10 Voltage input (constant)
1-3 N.O. timed
1-4 N.C. timed
11-9 N.O. timed
11-8 N.C. timed
5-6 Control
7 Not used

***Caution:*** Never apply voltage to 5-6

**OUTPUT 2**
2-10 Voltage input (constant)
1-3 N.O. timed
1-4 N.C. timed
8-9 Remote adjust
5-6 Control
7-11 Not used

***Caution:*** Never apply voltage to 5-6-8-9

Wiring Terminal Location

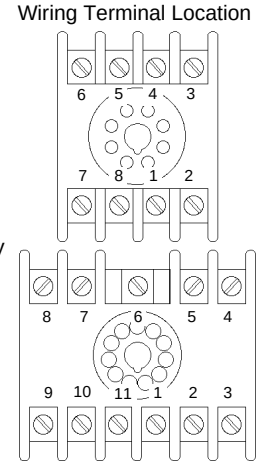


**OPTION 13 (output 1 only)**
Maintained interval
2-7 Voltage input (control)
1-3 N.O. timed
1-4 N.C. timed
8-5 N.C. timed
8-6 N.O. timed

## DIMENSIONS Inches (millimeters)

11 PIN BASE SHOWN

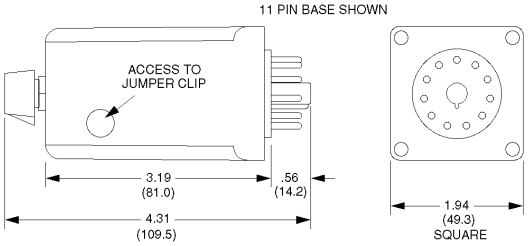


Courtesy of Steven Engineering, Inc. • 230 Ryan Way, South San Francisco, CA, 94080-6370 • Main Office: (650) 588-9200 • Outside Local Area: (800) 258-9200 • www.stevenengineering.com

Courtesy of Steven Engineering, Inc. • 230 Ryan Way, South San Francisco, CA, 94080-6370 • Main Office: (650) 588-9200 • Outside Local Area: (800) 258-9200 • www.stevenengineering.com

ISSC
KANSON ELECTRONICS, INC.
INDUSTRIAL SOLID STATE TIMER
MODEL 1019
PLUG-IN

## SPECIFICATIONS

**INPUT**

**VOLTAGE:** 120VAC/DC
**FREQUENCY:** 50/60 Hz or DC
**TOLERANCE (VOLTAGE):** ± 10% of nominal
**POWER CONSUMPTION:** 3 VA maximum
**TRANSIENT PROTECTION:** MOV

**OUTPUT**

**TYPE:** Electromechanical relay
**RATING:** 10 A @ 240VAC maximum

**TIMING**

**TYPE:** On delay
**REPEAT ACCURACY:** ± 1% of setting
**RESET TIME:** 40 msec minimum
**TIMING RAMP:** 0.02 sec min time - 1MΩ/sec
0.06 sec min time - 100kΩ/sec
0.5 sec min time - 10kΩ/sec
**TIME RANGE:** 0.02 to 500 secs in 6 ranges
**RANGE TOLERANCE:** ≤ 30% at maximum
≤ 0% at minimum
**CONTROL:** Application of power initiates timing cycle
**CONTROL TERMINALS:** A-B
**VOLTAGE PRESENT AT CONTROL TERMINALS:**
Same as input voltage

**PHYSICAL**

**OPERATING TEMP:** 0° to 50° C (32° to 120°F)
**TIMING VARIATION VS. TEMP:** ± 5% maximum
**MOUNTING:** Plug-in
**TERMINATION:** 11 pin blade socket
**HOUSING:** Plastic

## WIRING

**OUTPUT 1**

| | |
|---|---|
| A-B | Voltage input |
| 4-7 | N.O. timed |
| 1-7 | N.C. timed |
| 6-9 | N.O. timed |
| 3-9 | N.C. timed |
| 2-5-8 | Not used |

**OUTPUT 3**

| | |
|---|---|
| A-B | Voltage input |
| 4-7 | N.O. timed |
| 1-7 | N.C. timed |
| 6-9 | N.O. timed |
| 3-9 | N.C. timed |
| 2-5 | Remote adjust (jumper if not used) |
| 8 | Not used |

***Caution:*** Never apply voltage to 2-5

**OUTPUT 4**

| | |
|---|---|
| A-B | Voltage input |
| 1-7 | N.C. timed |
| 4-7 | N.O. timed |
| 3-9 | N.C. timed |
| 6-9 | N.O. timed |
| 2-8 | N.C. timed |
| 5-8 | N.O. timed |

Wiring Terminal Location
11 Pin Blade Socket

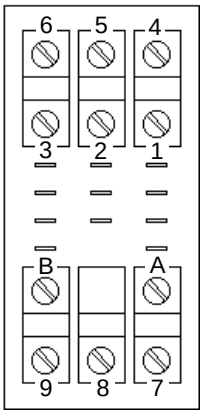


## DIMENSIONS Inches (millimeters)

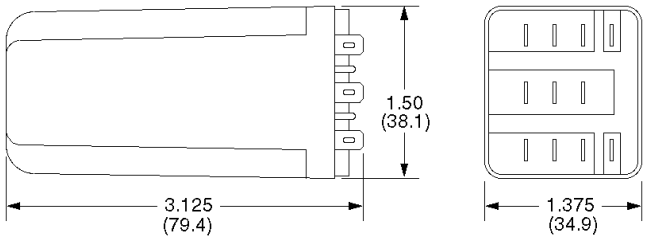




**On Delay**

**Small, Economical** plug-in unit saves space and installation time.

**Input Power Actuates** timing sequence, eliminating the need for a separate control circuit. Removing power automatically resets timing sequence.

UL File No. E50957

## ORDERING DATA

**ORDERING CODE** **1019 - 10 - 1 - 2**

**BASIC MODEL NUMBER**
1019

**TIME RANGE** (Secs)

| | | | |
|---|---|---|---|
| 1 | 0.02-1.0 | 50 | 0.06-50.0 |
| 5 | 0.02-5.0 | 100 | 0.5-100 |
| 10 | 0.06-10.0 | 500 | 0.5-500 |

**OUTPUT**
1 Relay DPDT
3 Relay DPDT w/remote adjust
4 Relay 3PDT

**INPUT**
2 120VAC/DC

**APPLICABLE ACCESSORIES**
See accessory section for details

| | |
|---|---|
| Potentiometers | RP-207, RP-209 |
| Reference dial | RP-216 |
| Locking attachment | RP-217 |
| 11 pin socket | RP-304 |
| Hold down clip | RP-306 |

# MODEL 1030 BASE MOUNT — INDUSTRIAL SOLID STATE TIMER

ISSC
KANSON ELECTRONICS, INC.



**Pulsed Off-On One Cycle**
**Maintained Off-On One Cycle**
**On Delay/Off Delay**

**Plug-in DPDT** relay output can be quickly replaced or interchanged with optional solid state output. The 1030 is especially useful in applications which require fast timing cycle rate and numerous operations in a short period of time.

## ORDERING DATA

**ORDERING CODE** **1030 — 1 — G — G — 6 — B**

**BASIC MODEL NUMBER**
1030

**INPUT VOLTAGE**
1 120VAC
2 240VAC
3 24VAC

**TIME RANGE** (Secs)
† OFF time
† ON time

| | | | |
|---|---|---|---|
| D | 0.06-1.0 | J | 0.5-50 |
| E | 0.06-2.5 | K | 0.5-100 |
| F | 0.06-5.0 | L | 0.5-250 |
| G | 0.06-10 | M | 0.5-500 |
| H | 0.06-25 | | |

**NOTE:** † On and Off times must have same minimum time.

**TIMING FUNCTION**
6 Pulsed off/on
7 Maintained off/on
8 On delay/Off delay

**OUTPUT**
B Relay DPDT
(solid state outputs available as accessories)

**OPTION**
Timing indication light (previously OP6) is now standard on Model 1030

**APPLICABLE ACCESSORIES**
See accessory section for details

| | |
|---|---|
| Output modules | RP-101, RP-103 |
| Potentiometers | RP-201 thru RP-210 |
| Reference dial | RP-216 |
| Locking attachment | RP-217 |

## SPECIFICATIONS

**INPUT**
**VOLTAGE:** 120VAC, 24VAC, 240VAC
**FREQUENCY:** 50/60 Hz
**TOLERANCE (VOLTAGE):** ± 15% of nominal
**POWER CONSUMPTION:** 10 VA maximum
**TRANSIENT PROTECTION:** Isolation transformer (120VAC and 240 VAC only)

**OUTPUT**
**TYPE:** Electromechanical relay (solid state available as accessory)
**RATING:** 10A @ 240VAC maximum

**TIMING**
**AVAILABLE TYPES:** Pulsed off-on one cycle, Maintained off-on one cycle, On delay/Off delay
**REPEAT ACCURACY:** ± 1% of setting
**RESET TIME:** 50 msec minimum
**INDICATION:** LED - ON when output energized
**TIMING RAMP:** 0.06 sec min time - 100kΩ/sec
0.5 sec min time - 10kΩ/sec
**TIME RANGE:** 0.06 to 500 secs in 9 ranges
**RANGE TOLERANCE:** ≤ 10% at max, ≤ 0% at min
**CONTROL:** Isolated contact closure
**CONTROL TERMINALS:** E-F
**VOLTAGE PRESENT AT CONTROL TERMINALS:** 24VDC minimum, 40VDC maximum

**PHYSICAL**
**OPERATING TEMP:** 0° to 50° C (32° to 120°F)
**TIMING VARIATION VS. TEMP:** ± 5% maximum
**MOUNTING:** Base mount
**TERMINATION:** Terminal blocks on face of timer
**HOUSING:** Metal

## WIRING

**OUTPUT B**
A-B Voltage input (constant)
C-D Remote adjust for OFF time, (jumper if not used)
E-F Control (starts timing function)
G-H Remote adjust for ON time, (jumper if not used)
1-3 N.O. timed
1-4 N.C. timed
5-8 N.C. timed
6-8 N.O. timed

***Caution:*** Never apply voltage to C-D-E-F-G-H

Wiring Terminal Location

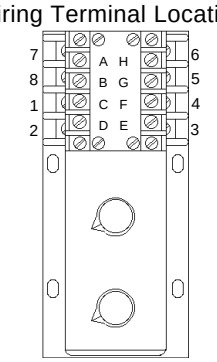


## DIMENSIONS Inches (millimeters)

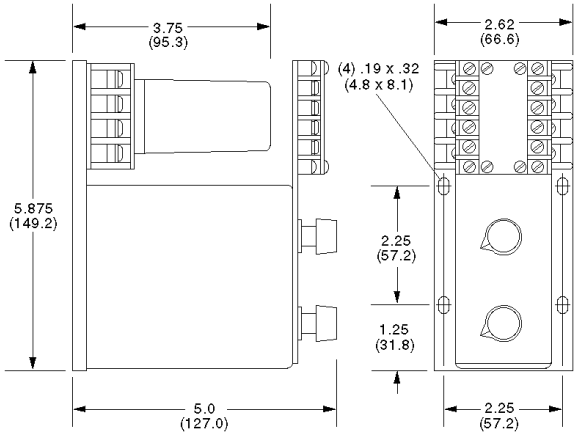


Courtesy of Steven Engineering, Inc. • 230 Ryan Way, South San Francisco, CA, 94080-6370 • Main Office: (650) 588-9200 • Outside Local Area: (800) 258-9200 • www.stevenengineering.com

Courtesy of Steven Engineering, Inc. • 230 Ryan Way, South San Francisco, CA, 94080-6370 • Main Office: (650) 588-9200 • Outside Local Area: (800) 258-9200 • www.stevenengineering.com



# INDUSTRIAL SOLID STATE TIMER

# MODEL 1060 BASE MOUNT

## SPECIFICATIONS

**INPUT**

**VOLTAGE:** 120VAC
**FREQUENCY:** 50/60 Hz
**TOLERANCE (VOLTAGE):** ± 15% of nominal
**POWER CONSUMPTION:** 10 VA maximum
**TRANSIENT PROTECTION:** Isolation transformer

**OUTPUT**

**TYPE:** Electromechanical relay (solid state available as an accessory)
**RATING:** 10A @ 240VAC maximum

**TIMING**

**TYPE:** Repeat cycle (start ON or start OFF)
**REPEAT ACCURACY:** ± 1% of setting
**RESET TIME:** 50 msec minimum
**INDICATION:** Optional LED - ON when output energized
**TIMING RAMP:** 0.06 sec min time - 100kΩ/sec
0.5 sec min time - 10kΩ/sec
**TIME RANGE:** 0.06 to 500 secs in 9 ranges
**RANGE TOLERANCE:** ≤ 10% at max, ≤ 0% at min
**CONTROL:** Isolated contact closure
**CONTROL TERMINALS:** E-F
**VOLTAGE PRESENT AT CONTROL TERMINALS:** 24VDC minimum, 40VDC maximum

**PHYSICAL**

**OPERATING TEMP:** 0° to 50° C (32° to 120°F)
**TIMING VARIATION VS. TEMPERATURE:** ± 5% max
**MOUNTING:** Base mount
**TERMINATION:** Terminal blocks on face of timer
**HOUSING:** Metal



**Repeat Cycle**

**Plug-in DPDT** relay output can be quickly replaced or interchanged with optional solid state output. The 1060 is especially useful in applications which require a fast timing cycle rate and numerous operations in a short period of time.

## WIRING

**OUTPUT B**

A-B Voltage input (constant)
C-D Remote adjust for first time period (jumper if not used)
E-F Control (starts timing function)
G-H Remote adjust for second time period (jumper if not used)
1-3 N.O. timed
1-4 N.C. timed
5-8 N.C. timed
6-8 N.O. timed

***Caution:*** Never apply voltage to C-D-E-F-G-H

Wiring Terminal Location

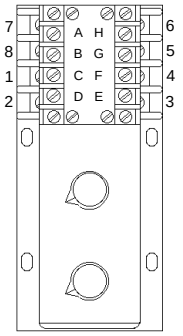


## DIMENSIONS Inches (millimeters)

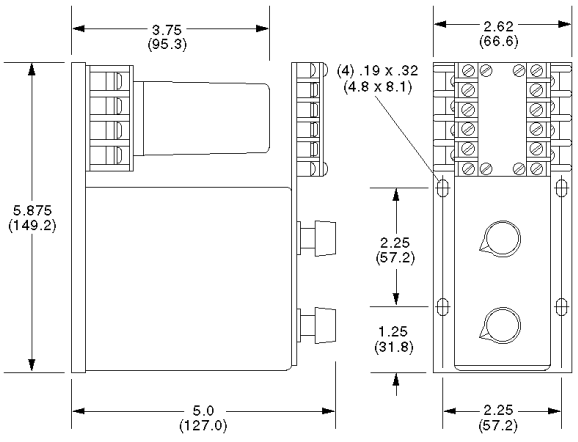


## ORDERING DATA

**ORDERING CODE** **1060 - 1 - F - F - 1 - B**

**BASIC MODEL NUMBER**
1060

**INPUT VOLTAGE**
1 120VAC

† ON time
† OFF time

**TIME RANGE** (Secs)

| | | | |
|---|---|---|---|
| D | 0.06-1.0 | J | 0.5-50 |
| E | 0.06-2.5 | K | 0.5-100 |
| F | 0.06-5.0 | L | 0.5-250 |
| G | 0.06-10 | M | 0.5-500 |
| H | 0.06-25 | | |

**NOTE:** † On and Off times must have same minimum time.

**TIMING FUNCTION**
1 Repeat cycle start Off
2 Repeat cycle start On

**OUTPUT**
B Relay DPDT
(solid state outputs available as accessories)

**OPTION**
Timing indication light (previously OP6) is now standard on Model 1060

**APPLICABLE ACCESSORIES**
See accessory section for details

| | |
|---|---|
| Output modules | RP-101, RP-103 |
| Potentiometers | RP-201 thru RP-210 |
| Reference dial | RP-216 |
| Locking attachment | RP-217 |

# MODEL 1061 BASE MOUNT — INDUSTRIAL SOLID STATE TIMER

ISSC
KANSON ELECTRONICS, INC.



## Repeat Cycle

**Totally Solid State** design eliminates moving parts and provides reliable, long-lasting performance.
**Internal Wiring** supplies input power directly to timed output terminals, eliminating the need for an external jumper.

UL File No. E50957

## ORDERING DATA

**ORDERING CODE** **1061 - 1 - E - E - 2 - C OP6**

**BASIC MODEL NUMBER**
1061

**INPUT VOLTAGE**
1 120VAC

† ON time
† OFF time

**TIME RANGE** (Secs)

| | | | |
|---|---|---|---|
| D | 0.06-1.0 | J | 0.5-50 |
| E | 0.06-2.5 | K | 0.5-100 |
| F | 0.06-5.0 | L | 0.5-250 |
| G | 0.06-10 | M | 0.5-500 |
| H | 0.06-25 | | |

**NOTE:** † On and Off times must have same minimum time.

**TIMING FUNCTION**
1 Repeat cycle start Off
2 Repeat cycle start On

**OUTPUT**
C Solid State (AC) 1 N.O. 35VA
C2A* Solid State (AC) 1 N.O. 5A (start off only)

**OPTION** (if desired)
OP3* Omit both potentiometers and add remote adjust terminals
OP6 Timing indication light
OP7 DC control for rapid recycle - 0.05 sec
**Not available on UL units*

**APPLICABLE ACCESSORIES**
See accessory section for details

| | |
|---|---|
| Potentiometers | RP-201 thru RP-210 |
| Reference dial | RP-216 |
| Locking attachment | RP-217 |

## SPECIFICATIONS

**INPUT**
**VOLTAGE:** 120VAC
**FREQUENCY:** 50/60 Hz
**TOLERANCE (VOLTAGE):** ± 15% of nominal
**POWER CONSUMPTION:** 10 VA maximum
**TRANSIENT PROTECTION:** Isolation transformer

**OUTPUT**
**TYPE:** Solid state
**RATING:** C output 35VA continuous, 150VA in-rush @ 120VAC
C2A output 5A continuous, 12.5A in-rush @ 120VAC

**TIMING**
**TYPE:** Repeat cycle (start ON or start OFF)
**INDICATION:** Optional incandescent light - ON when output energized
**TIMING RAMP:** 0.06 sec min time - 100kΩ/sec
0.5 sec min time - 10kΩ/sec
**TIME RANGE:** 0.06 to 500 secs in 9 ranges
**RANGE TOLERANCE:** ≤ 10% at max, ≤ 0% at min
**CONTROL:** Isolated contact closure
**CONTROL TERMINALS:** E-F
**VOLTAGE PRESENT AT CONTROL TERMINALS:**
Same as input voltage
24VDC minimum, 40VDC maximum (OP7)

**PHYSICAL**
**OPERATING TEMP:** 0° to 50° C (32° to 120°F)
**TIMING VARIATION VS. TEMP:** ± 5% maximum
**MOUNTING:** Base mount
**TERMINATION:** Terminal block on face of timer
**HOUSING:** Metal

## WIRING

A-B Voltage input (constant)
E-F Control (starts timing function)
B-2 N.O. timed output

**OPTION 3**
A-B Voltage input (constant)
C-D Remote adjust for ON time, (jumper if not used)
E-F Control (starts timing function)
3-4 Remote adjust for OFF time, (jumper if not used)
B-2 N.O. timed

***Caution:*** Never apply voltage to terminals E-F

Wiring Terminal Location

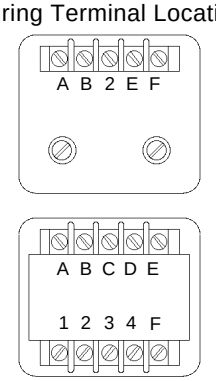


## DIMENSIONS Inches (millimeters)

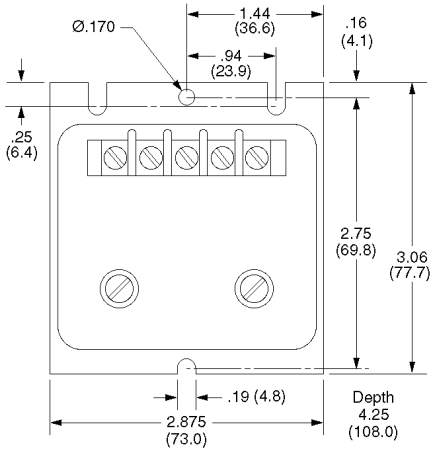


Courtesy of Steven Engineering, Inc. • 230 Ryan Way, South San Francisco, CA, 94080-6370 • Main Office: (650) 588-9200 • Outside Local Area: (800) 258-9200 • www.stevenengineering.com

Courtesy of Steven Engineering, Inc. • 230 Ryan Way, South San Francisco, CA, 94080-6370 • Main Office: (650) 588-9200 • Outside Local Area: (800) 258-9200 • www.stevenengineering.com

ISSC
KANSON ELECTRONICS, INC.

# INDUSTRIAL SOLID STATE TIMER

# MODEL 1071 PLUG IN

## SPECIFICATIONS

**INPUT**

**VOLTAGE:** 120VAC/DC, 24VAC/DC
**FREQUENCY:** 50/60 Hz or DC
**TOLERANCE (VOLTAGE):** ± 15% of nominal
**POWER CONSUMPTION:** 4 VA maximum
**TRANSIENT PROTECTION:** MOV

**OUTPUT**

**TYPE:** Electromechanical relay
**RATING:** 5A @ 240VAC maximum

**TIMING**

**TYPES:** On delay
**REPEAT ACCURACY:** ± 0.5 % of setting or 0.004 secs, whichever is greater.
**RESET TIME:** 40 msec minimum
**INDICATION:** LED - ON when timing
**TIMING RATIO:** 10 to 1 potentiometer
**TIME RANGE:** 8 per unit
**RANGE TOLERANCE:** ±10% typical
**CONTROL:** Power actuated or AC proximity sensor
**CONTROL TERMINALS:** 2-7 (8 pin unit)
2-10 (11 pin unit)
**VOLTAGE PRESENT AT CONTROL TERMINALS:** Same as input voltage

**PHYSICAL**

**OPERATING TEMP:** -20° to 70° C (-4° to 158°F)
**TIMING VARIATION VS. TEMP:** ± 5% maximum
**MOUNTING:** Plug-in
**TERMINATION:** 8 or 11 pin socket
**HOUSING:** Plastic

## WIRING

Wiring Terminal Location

**OUTPUT A**

2-7 Voltage input (control)
1-3 N.O. timed
1-4 N.C. timed
5-6 Remote adjust
8 Not used

***Caution:*** Never apply voltage to 5-6

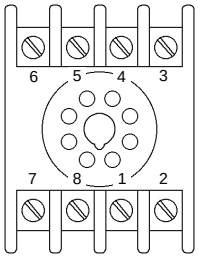


**OUTPUT B**

2-7 Voltage input (control)
1-3 N.O. timed
1-4 N.C. timed
8-6 N.O. timed
8-5 N.C. timed

**OUTPUT C**

2-10 Voltage input (control)
1-3 N.O. timed
1-4 N.C. timed
11-9 N.O. timed
11-8 N.C. timed
5-6 Remote adjust
7 Not used

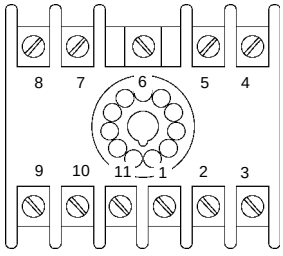


***Caution:*** Never apply voltage to 5-6

## DIMENSIONS Inches (millimeters)

OCTAL BASE SHOWN

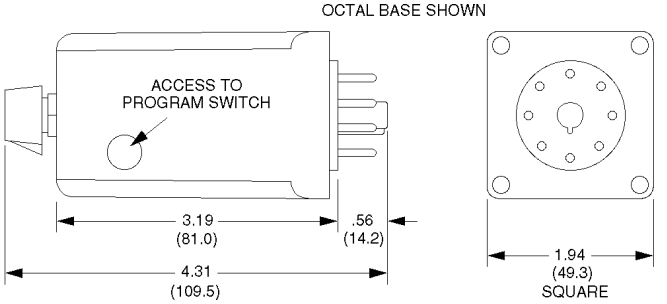




**On Delay**

**Multi-Range** unit is programmable for 8 different time ranges. The 1071 reduces inventory requirements by offering the time range capacity of eight separate timers in one unit.
**Input Power Actuates** timing sequence, eliminating the need for a separate control circuit. Removing power automatically resets timing sequence.
**Input Is Compatible** with both standard mechanical switches and solid state proximity sensors.

UL File No. E50957
CSA File No. LR92815

## ORDERING DATA

**ORDERING CODE** **1071 - 2 - P - 1 - A**

**BASIC MODEL NUMBER**
1071

**INPUT VOLTAGE**
1 120VAC
2 24VAC/DC

**TIME RANGE** (Secs)
P (includes the following time ranges)

| | | | |
|---|---|---|---|
| 0 | 200-2000 | 4 | 0.75-7.5 |
| 1 | 50-500 | 5 | 0.2-2.0 |
| 2 | 12-120 | 6 | 0.06-.5 |
| 3 | 3-30 | 7 | 0.025-0.13 |

switch positions 8 and 9 not used

Consult factory for longer time ranges.

**TIMING FUNCTION**
1 On delay

**OUTPUT**
A* Relay SPDT w/ remote adjust (8 pin plug)
B Relay DPDT (8 pin plug)
C* Relay SPDT w/remote adjust (11 pin plug)
*Units with remote adjust do not include a potentiometer in the timer. A separate 100kΩ potentiometer must be used with a maximum length of 12 feet of shielded twisted pair wire.

**APPLICABLE ACCESSORIES**
See accessory section for details

| | |
|---|---|
| Potentiometer | RP-204 |
| Reference dial | RP-216 |
| Locking attachment | RP-217 |
| 8 pin socket | RP-302 |
| 11 pin socket | RP-303 |
| Hold down clip | RP-305 |

# MODEL 2110 BLOCK — INDUSTRIAL SOLID STATE TIMER

KANSON ELECTRONICS, INC.




## On Delay

**The 2110** features simple two-wire installation. The compact encapsulated timer is switch programmable from 0.1 to 10230 seconds in three time ranges. Two power supply ranges cover operating voltages from 24 to 240 VAC/DC with a reliable 1 Amp solid state output.

## SPECIFICATIONS

**INPUT**

**VOLTAGE:** 24 to 140 VAC/DC or 100 to 240 VAC/DC
**FREQUENCY:** 50/60 Hz or DC
**TOLERANCE (VOLTAGE):** ±10% of nominal
**POWER CONSUMPTION:** 1VA maximum
**TRANSIENT PROTECTED**

**OUTPUT**

**TYPE:** Solid State N.O.
**RATING:** 1A @ 240VAC/DC max. (10A 1 cycle surge)
**VOLTAGE DROP:** 2.5 volts typical at 1A

**TIMING**

**TYPE:** On delay
**REPEAT ACCURACY:** ≤ 0.5%
**RESET TIME:** ≤ 50 msec
**TIME RANGE:** 0.1 to 10230 seconds in 3 ranges
**TOLERANCE:** ± 5%
**CONTROL:** Power applied to input initiates timing cycle

**PHYSICAL**

**OPERATING TEMP:** -40° to +80°C (-40° to +175°F)
**TIMING VARIATION VS. TEMP:** ± 5% maximum
**MOUNTING:** Surface with #8 or #10 screw
**TERMINATION:** 0.250 inch male quick connect terminals
**HOUSING:** Plastic

## OPERATION

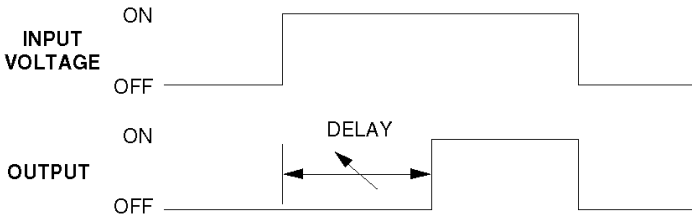


## ORDERING DATA

**ORDERING CODE** **2110 - 1 - B - 1 - C**

**BASIC MODEL NUMBER**
2110

**INPUT VOLTAGE**
1 24 to 140VAC/DC
2 100 to 240VAC/DC

**TIME RANGE** in seconds
A 0.1 to 102.3
B 1.0 to 1023
C 10 to 10230

**TIMING FUNCTION**
1 On delay

**OUTPUT**
C Solid state N.O. 1 Amp max.

## WIRING

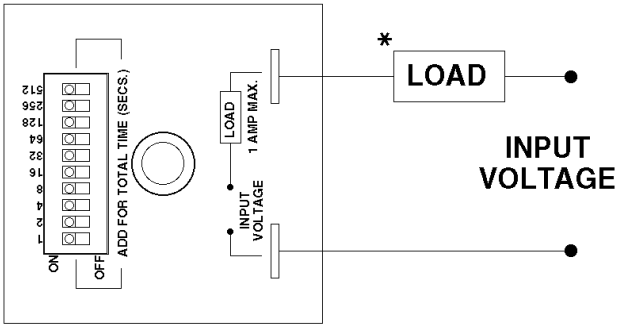


*Load may be connected to either side of line.

***WARNING:* Connection of power without a series load will cause permanent damage.**

## DIMENSIONS Inches(millimeters)

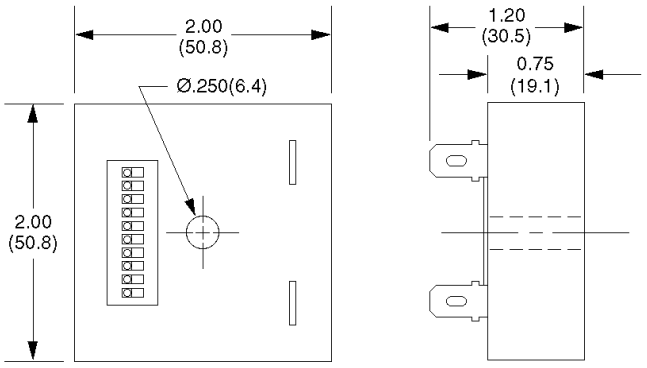


Courtesy of Steven Engineering, Inc. • 230 Ryan Way, South San Francisco, CA, 94080-6370 • Main Office: (650) 588-9200 • Outside Local Area: (800) 258-9200 • www.stevenengineering.com

Courtesy of Steven Engineering, Inc. • 230 Ryan Way, South San Francisco, CA, 94080-6370 • Main Office: (650) 588-9200 • Outside Local Area: (800) 258-9200 • www.stevenengineering.com



## SPECIFICATIONS

**INPUT**

**VOLTAGE:** 24 to 140 VAC/DC or 100 to 240 VAC/DC
**FREQUENCY:** 50/60 Hz or DC
**TOLERANCE (VOLTAGE):** ±10% of nominal
**POWER CONSUMPTION:** 1VA maximum
**TRANSIENT PROTECTED**

**OUTPUT**

**TYPE:** Solid State N.O.
**RATING:** 1A @ 240VAC/DC max. (8A 1 cycle surge)
**VOLTAGE DROP:** 2.5 volts typical at 1A

**TIMING**

**TYPE:** On delay
**REPEAT ACCURACY:** ≤ 0.5%
**RESET TIME:** ≤ 50 msec
**TIME RANGE:** 0.2 seconds to 1000 minutes in 6 ranges
**EXTERNAL RESISTOR:** 0 to 1.0 M Ω
1.0M Ω = maximum delay
**TOLERANCE:** ±5%
**CONTROL:** Power applied to input initiates timing cycle

**PHYSICAL**

**OPERATING TEMP:** -40° to +80°C (-40° to +175°F)
**TIMING VARIATION VS. TEMP:** ± 5% maximum
**MOUNTING:** Surface with #8 or #10 screw
**TERMINATION:** 0.250 inch male quick connect terminals
**HOUSING:** Plastic

## WIRING

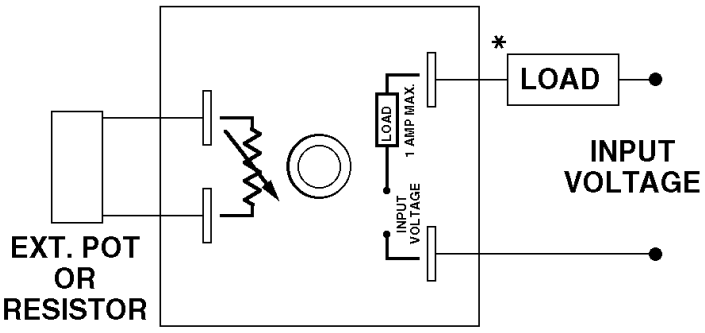


*Load may be connected to either side of line.

***WARNING:* Connection of power without a series load will cause permanent damage.**

## DIMENSIONS Inches(millimeters)

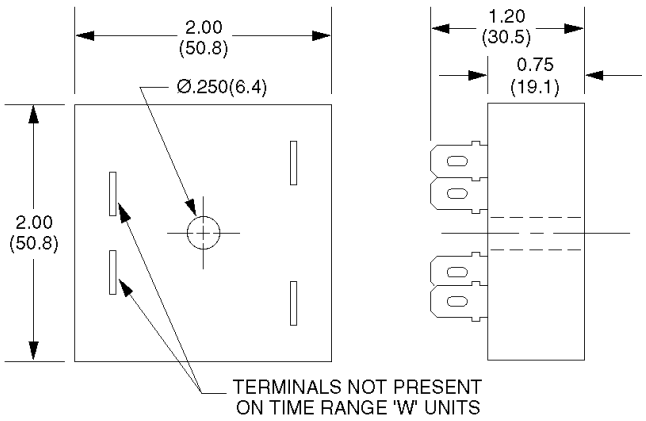





**On Delay**

**The 2112** features simple two-wire installation. The compact encapsulated timer is adjustable from 0.2 seconds to 1000 minutes in six ranges. Two power supply ranges cover operating voltages from 24 to 240 VAC/DC with a reliable, 1 Amp solid state output.

## OPERATION

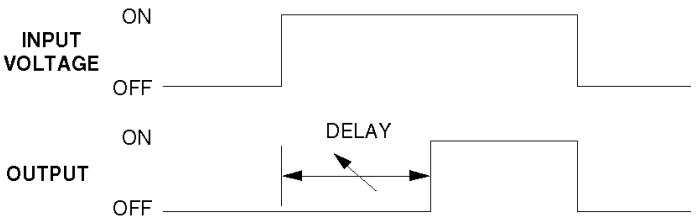


## ORDERING DATA

**ORDERING CODE** **2112 - 1 - B - 1 - C**

**BASIC MODEL NUMBER**
2112

**INPUT VOLTAGE**
1 24 to 140VAC/DC
2 100 to 240VAC/DC

**TIME RANGE**

| | | | |
|---|---|---|---|
| A | 0.2 to 10 sec. | D | 0.1 to 10 min. |
| B | 1.0 to 100 sec. | E | 1.0 to 100 min. |
| C | 10 to 1000 sec. | F | 10 to 1000 min |

W Fixed Time(specify W & desired fixed delay)
Factory will set time within 5%, unit will not have external terminals for timing reststor.

**TIMING FUNCTION**
1 On delay

**OUTPUT**
C Solid state N.O. 1 Amp max.

# MODEL 2115 BLOCK INDUSTRIAL SOLID STATE TIMER

KANSON ELECTRONICS, INC.




## Interval

**The 2115 features** a simple three-wire installation. The compact encapsulated timer is switch programmable from 0.1 to 10230 seconds in three time ranges. Two power supply ranges cover operating voltages from 24 to 240 VAC/DC with a reliable, 1 Amp solid state output.

File E123813

LR 92815-3

## OPERATION

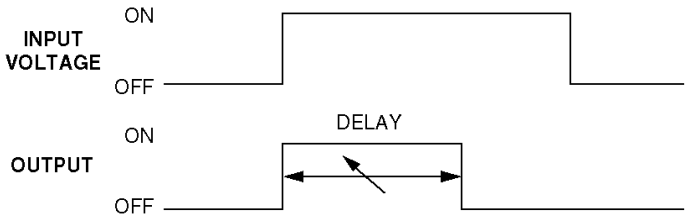


## ORDERING DATA

**ORDERING CODE** **2115 - 2 - B - 5 - C**

**BASIC MODEL NUMBER**
2115

**INPUT VOLTAGE**
1 120VAC
2 240VAC

**TIME RANGE** in seconds
A 0.1 to 102.3
B 1.0 to 1023
C 10 to 10230

**TIMING FUNCTION**
5 Interval

**OUTPUT**
C Solid state N.O. 1 Amp max.

## SPECIFICATIONS

**INPUT**
**VOLTAGE:** 120 VAC or 240 VAC
**FREQUENCY:** 50/60 Hz
**TOLERANCE (VOLTAGE):** ±15% of nominal
**POWER CONSUMPTION:** 1VA maximum
**TRANSIENT PROTECTED**

**OUTPUT**
**TYPE:** Solid State N.O.
**RATING:** 1A @ 240VAC/DC max. (10A 1 cycle surge)
**VOLTAGE DROP:** 2.5 volts typical at 1A

**TIMING**
**TYPE:** Interval
**REPEAT ACCURACY:** ≤ 0.5%
**RESET TIME:** ≤ 150 msec
**TIME RANGE:** 0.1 to 10230 seconds in 3 ranges
**TOLERANCE:** ± 5%
**CONTROL:** Power applied to input initiates timing cycle

**PHYSICAL**
**OPERATING TEMP:** -40° to +60°C (-40° to +140°F)
**TIMING VARIATION VS. TEMP:** ± 5% maximum
**MOUNTING:** Surface with #8 or #10 screw
**TERMINATION:** 0.250 inch male quick connect terminals
**HOUSING:** Plastic

## WIRING

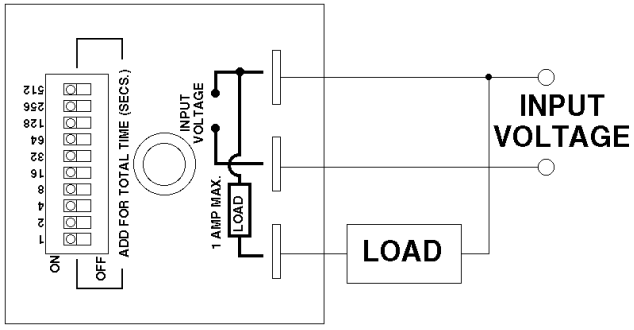


## DIMENSIONS Inches(millimeters)

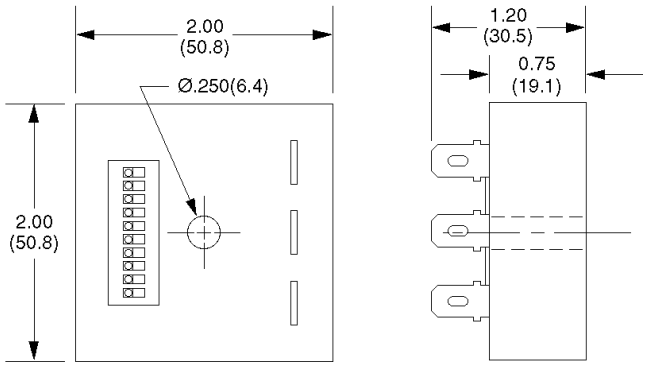


Courtesy of Steven Engineering, Inc. • 230 Ryan Way, South San Francisco, CA, 94080-6370 • Main Office: (650) 588-9200 • Outside Local Area: (800) 258-9200 • www.stevenengineering.com

# MODEL 2120 BLOCK — INDUSTRIAL SOLID STATE TIMER

KANSON ELECTRONICS, INC.

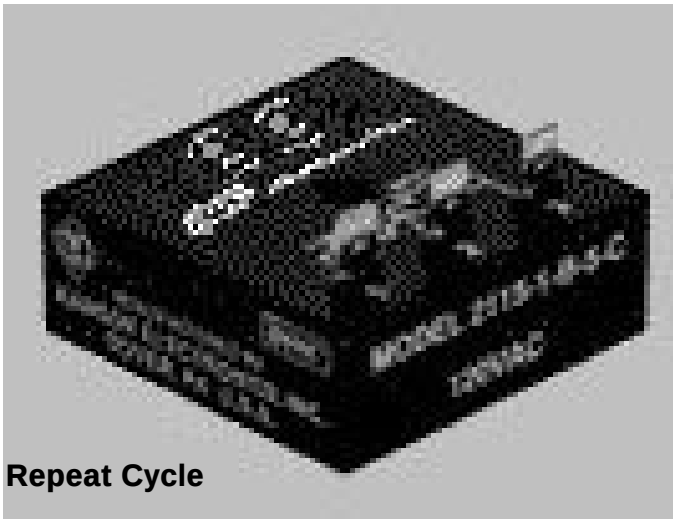

**Repeat Cycle**

**The 2120 features** a simple three-wire installation. The compact encapsulated timer has independantly controlable"On Time" and "Off Time" adjustments. Power supply operating voltage is 120 VAC/DC with a reliable, 1 Amp solid state output.

## SPECIFICATIONS

**INPUT**
- **VOLTAGE:** 120 VAC/DC
- **FREQUENCY:** 50/60 Hz
- **TOLERANCE (VOLTAGE):** ±15% of nominal
- **POWER CONSUMPTION:** 1VA maximum
- **TRANSIENT PROTECTED**

**OUTPUT**
- **TYPE:** Solid State N.O.
- **RATING:** 1A @ 120VAC/DC max. (10A 1 cycle surge)
- **VOLTAGE DROP:** 2.5 volts typical at 1A

**TIMING**
- **TYPE:** Repeat Cycle
- **REPEAT ACCURACY:** ≤ 0.5%
- **RESET TIME:** ≤ 150 msec
- **TIME RANGE:** ON: 1 min. max / OFF: 2 hr. max
- **TOLERANCE:** ± 5%
- **CONTROL:** Power applied to input initiates timing cycle

**PHYSICAL**
- **OPERATING TEMP:** -40° to +60°C (-40° to +140°F)
- **TIMING VARIATION VS. TEMP:** ± 5% maximum
- **MOUNTING:** Surface with #8 or #10 screw
- **TERMINATION:** 0.250 inch male quick connect terminals
- **HOUSING:** Plastic

## WIRING

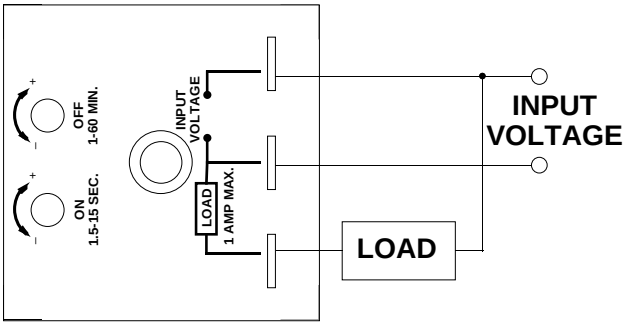


## OPERATION

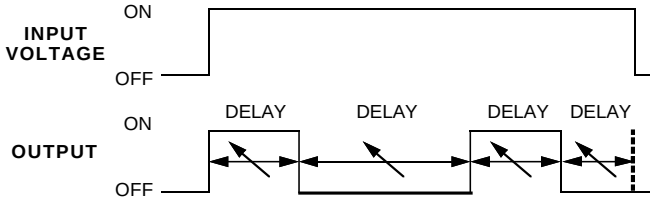


## ORDERING DATA

**ORDERING CODE** **2120 - 1 - A - F - 9 - C**

**BASIC MODEL NUMBER**
2120

**INPUT VOLTAGE**
1 120VAC

**TIME RANGE "ON"** in seconds
A 1.5 to 15
B
C
W Factory fixed*

**TIME RANGE "OFF"** in minutes
E
F 1 to 60
G
W Factory fixed

**TIMING FUNCTION**
9 Repeat Cycle

**OUTPUT**
C Solid state N.O. 1 Amp max.

* Specify W and desired fixed time - Factory will set at +/- 5%

## DIMENSIONS Inches(millimeters)

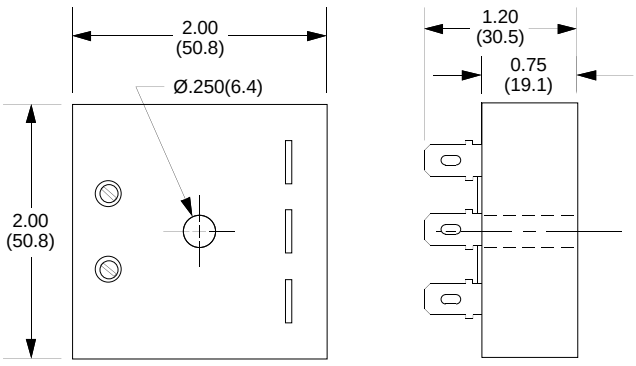

ISSC
KANSON ELECTRONICS, INC.
INDUSTRIAL SOLID STATE TIMER
MODEL 2122 BLOCK

Courtesy of Steven Engineering, Inc. • 230 Ryan Way, South San Francisco, CA, 94080-6370 • Main Office: (650) 588-9200 • Outside Local Area: (800) 258-9200 • www.stevenengineering.com

## SPECIFICATIONS

**INPUT**

**VOLTAGE:** 24, 120 or 240 VAC
**FREQUENCY:** 50/60 Hz
**TOLERANCE (VOLTAGE):** ±10% of nominal
**POWER CONSUMPTION:** 1VA maximum
**TRANSIENT PROTECTED**

**OUTPUT**

**TYPE:** Solid State N.O.
**RATING:** 1.0A @ 240VAC max. (8A 1 cycle surge)
**VOLTAGE DROP:** 2.5 volts typical at 1.0 A

**TIMING**

**TYPE:** Coincident input one shot
**REPEAT ACCURACY:** ≤ 0.5%
**RESET TIME:** ≤ 50 msec
**TIME RANGE:** 50 msec to 1 second in 5 steps
**TOLERANCE:** ±15%
**CONTROL:** Simultaneous (within 50 msec) application of both control signals initiates timing cycle.

**PHYSICAL**

**OPERATING TEMP:** -40° to +80°C (-40° to +175°F)
**TIMING VARIATION VS. TEMP:** ± 5% maximum
**MOUNTING:** Surface with #8 or #10 screw
**TERMINATION:** 0.250 inch male quick connect terminals
**HOUSING:** Plastic

## WIRING

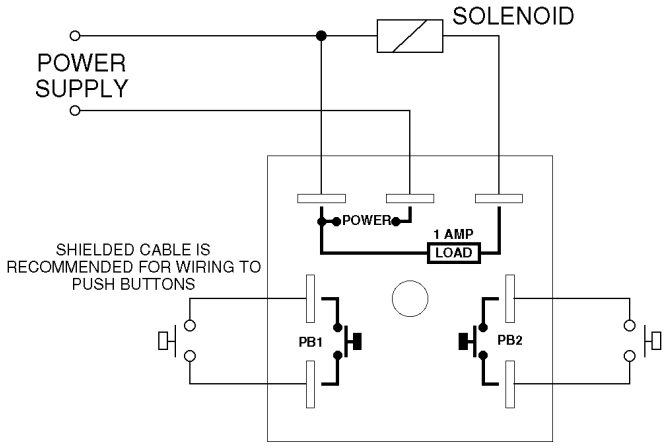


## DIMENSIONS Inches(millimeters)

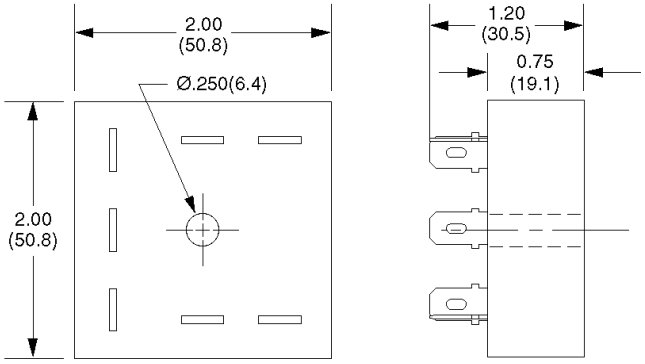





**Dual Input One Shot**

**The 2122** is a compact encapsulated timer that requires inputs from two sources that must be applied within 50 msec to initiate timing sequence. If one input is held closed, closing the other input will not initiate timing cycle. The reliable, 1 Amp solid state output offers pulse widths from 50 msec to 1 second suitable for driving most valves or solenoids. Operating voltages of 24, 120 or 240 VAC.

## OPERATION

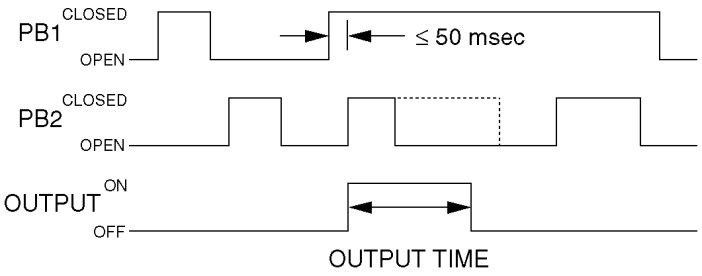


## ORDERING DATA

**ORDERING CODE** **2122 - 1 - B - 4 - C**

**BASIC MODEL NUMBER**
2122

**INPUT VOLTAGE**
1 120 VAC
2 220 VAC
3 24 VAC

**TIME RANGE**
A 50 msec
B 100 msec
C 250 msec
D 500 msec
E 1 second

**TIMING FUNCTION**
4 Pulsed Interval (dual coincident input)

**OUTPUT**
C Solid state N.O. 1 Amp max.

SERIES 2200 BLOCK
INDUSTRIAL SOLID STATE TIMER
(ISSC)
KANSON ELECTRONICS, INC.




This is the 2210 timer, one of the standard parts in the 2200 series.

## Semi-Custom Application Specific Timer

**The 2200 Series** offers quick turn-around on development of special function timers with minimal non-recurring charges making it economical for small runs. Power supply options include 24VAC, 120VAC, 240VAC or 10-30VDC with a reliable Solid state 1 Amp output. There are two power supply terminals, one input and one output. Other options include a 6 position dip switch, status LED, crystal controlled time base, non-volatile memory, analog input on DC supply versions and custom artwork and/or case markings.

## OPERATION

Operating parameters specified by customer.

Examples:

- time totalizing, count retained when power removed
- asymetrical waveform generation
- switch selectable multiple functions in a single package
- signal conditioning
- repeat cycle, pulse on removal of control

## ORDERING DATA

Please contact factory with the specifications required for your application.

## SPECIFICATIONS

**INPUT**

**VOLTAGE:** 24, 120, 240 VAC or 10-30 VDC
**FREQUENCY:** 50/60 Hz, 400 Hz or DC
**TOLERANCE (VOLTAGE):** ±15% of nominal
**POWER CONSUMPTION:** 1.0VA max AC, 1.0W DC
**TRANSIENT PROTECTED**

**CONTROL**

**VOLTAGE:** not to exceed power supply voltage
**REFERENCE:** L1 or L2
**TYPE:** digital or analog (analog on DC units only)

**OUTPUT**

**TYPE:** Solid State
**RATING:** AC models - 1.0A at rated supply voltage
10A 1 cycle surge
DC models - 1.0A sourcing or sinking
**VOLTAGE DROP:** AC models - 2.5 volts typical at 1.0A
DC models - <0.75V at 1.0A

**TIMING**

**TYPE:** Custom
**REPEAT ACCURACY:** ≤ 0.1% (crystal controlled option)
**RESET TIME:** ≤ 150 msec
**TOLERANCE:** ±0.5%

**PHYSICAL**

**OPERATING TEMP:** -40° to +60°C (-40° to +140°F)
**TIMING VARIATION VS. TEMP:** ±1% crystal controlled
**MOUNTING:** Surface with #8 or #10 screw
**TERMINATION:** 0.250 inch male quick connect terminals
**HOUSING:** Plastic

## FEATURES

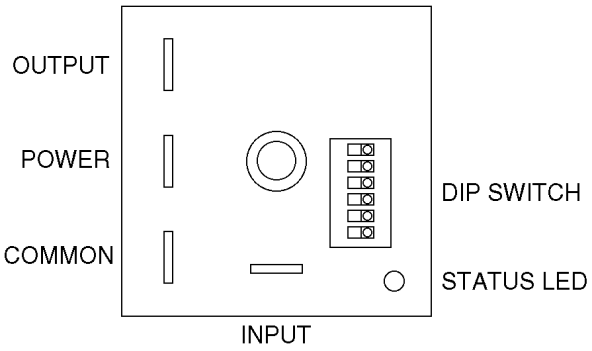


## DIMENSIONS Inches(millimeters)

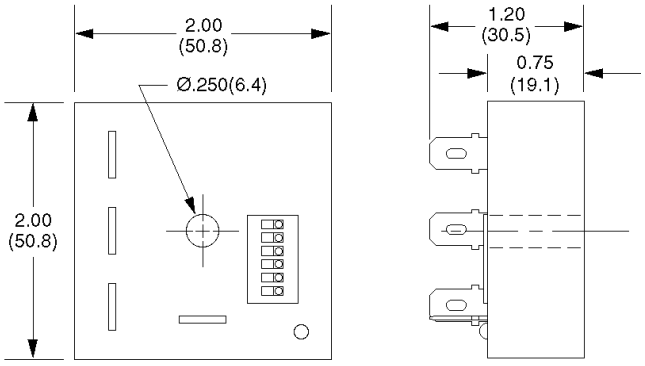


Courtesy of Steven Engineering, Inc. • 230 Ryan Way, South San Francisco, CA, 94080-6370 • Main Office: (650) 588-9200 • Outside Local Area: (800) 258-9200 • www.stevenengineering.com

Courtesy of Steven Engineering, Inc. • 230 Ryan Way, South San Francisco, CA, 94080-6370 • Main Office: (650) 588-9200 • Outside Local Area: (800) 258-9200 • www.stevenengineering.com

ISSC
KANSON ELECTRONICS, INC.
INDUSTRIAL SOLID STATE TIMER
MODEL 2210 BLOCK

## SPECIFICATIONS

**INPUT**

**VOLTAGE:** 24VAC, 120 VAC or 240 VAC
**FREQUENCY:** 50/60 Hz
**TOLERANCE (VOLTAGE):** ±15% of nominal
**POWER CONSUMPTION:** 2VA maximum
**TRANSIENT PROTECTED**

**OUTPUT**

**TYPE:** Solid State N.O. Zero Voltage Crossing
**RATING:** 1A @ 240VAC/DC max.
**VOLTAGE DROP:** <1.6 volts at 1A

**TIMING**

**TYPE:** On Delay
**TIME RANGE:** 1 minute to 10230 days in 3 ranges
**TOLERANCE:** <250 msec per application of power
**CONTROL:** Power applied to input initiates timing cycle

**PHYSICAL**

**OPERATING TEMP:** 0°C to +70°C (32° to 155°F)
extended temperature range available - contact factory
**MOUNTING:** Surface with #8 or #10 screw
**TERMINATION:** 0.250 inch male quick connect terminals
**HOUSING:** Plastic

## WIRING

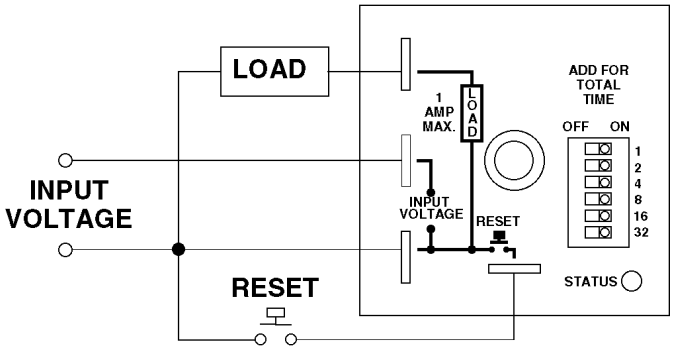


## DIMENSIONS Inches(millimeters)

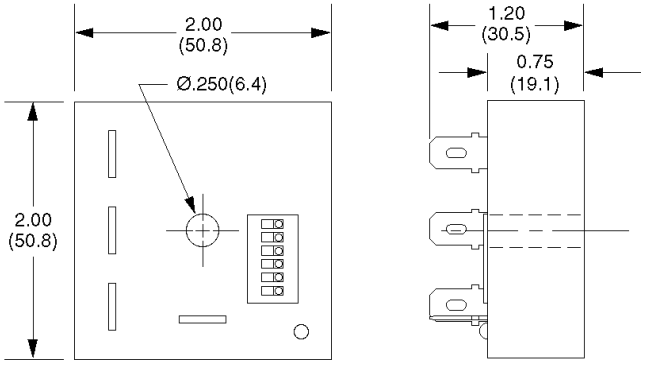





**On Delay**
**non-volatile memory**

**The 2210** is designed for use as a maintenance reminder or lockout, it starts timing upon application of input power and retains count during removal of power. Input power frequency is used for an accurate time base. A six position dip switch selects the desired time delay. Switch settings can only be changed when output is on. A status LED indicates unit is timing. The solid state 1 Amp output can handle a variety of loads.

The reset input is active only when output is "on". Output can be forced "on" by setting all dip switches to "off" and pressing reset.

## OPERATION

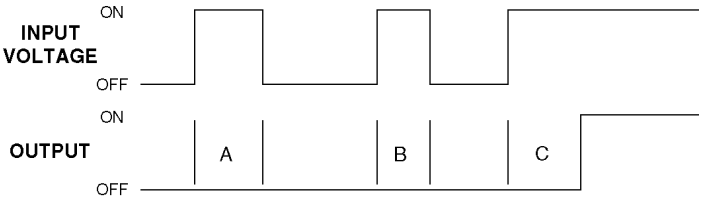


TOTAL DELAY = A + B + C

## ORDERING DATA

**ORDERING CODE** **2210 - 1 - A - 1 - C**

**BASIC MODEL NUMBER**
2210

**INPUT VOLTAGE**

| | | | |
|---|---|---|---|
| 1 | 120VAC 60 Hz | 4 | 120VAC 50 Hz |
| 2 | 240VAC 60 Hz | 5 | 240VAC 50 Hz |
| 3 | 24VAC 60 Hz | 6 | 24VAC 50 Hz |

**TIME RANGE**

| MINUTES | HOURS | DAYS |
|---|---|---|
| A 1 - 63 | D 1 - 63 | G 1 - 63 |
| B 10 - 630 | E 10 - 630 | H 10 - 630 |
| C 100 - 6300 | F 100 - 6300 | J 100 - 6300 |

*custom ranges available - contact factory

**TIMING FUNCTION**
1 On Delay

**OUTPUT**
C Solid state N.O. 1 Amp max.

# MODEL 1068 INDUSTRIAL SOLID STATE TIMER

DIN PANEL MOUNT

KANSON ELECTRONICS, INC.



## Repeat Cycle

**The 1068** features repeat cycle operation in a compact, plug-in unit, ON and OFF times are independently adjustable in 16 programmable time ranges from 0.1 seconds to 500 hours. An auto-calibrating dial provides direct reading of time setting in every range. Operating voltage options are available from 12VDC to 240VAC. LED indicators for output on and output off complete the package. Now available with plug-in or screw terminal base.

## ORDERING DATA

**ORDERING CODE** **1068 - 1 - P - 9 - B - 1 - 1**

**BASIC MODEL NUMBER**
1068

**INPUT VOLTAGE**
1 120-240 VAC
3 24 VAC/DC
5 12 VDC

**TIME RANGE**
P (Includes the following ranges)

| seconds | minutes | hours | 10 hours |
|---|---|---|---|
| 0.1 to 1.0 | 0.1 to 1.0 | 0.1 to 1.0 | 1.0 to 10 |
| 0.5 to 5.0 | 0.5 to 5.0 | 0.5 to 5.0 | 5.0 to 50 |
| 1.0 to 10 | 1.0 to 10 | 1.0 to 10 | 10 to 100 |
| 5.0 to 50 | 5.0 to 50 | 5.0 to 50 | 50 to 500 |

**TIMING FUNCTION**
9 Repeat Cycle

**OUTPUT**
B Relay DPDT

**TERMINATION**
1 8 pin plug-in base
2 Screw terminals

**DEGREE OF PROTECTION**
1 IP50 Standard
2 IP65 Sealed unit(special order only)

**APPLICABLE ACCESSORIES**
See accessory section for details

| | |
|---|---|
| 8 pin socket | RP-320 |
| 8 pin reversible socket | RP-321 |
| 8 pin cable socket | RP-323 |
| Panel mount clip | RP-325 |
| Stop rings | RP-327 |

## SPECIFICATIONS

**INPUT**
**VOLTAGE:** 100-240 VAC, 24 VAC/DC, 12VDC
**FREQUENCY:** 50/60 Hz (AC models)
**TOLERANCE (VOLTAGE):** - 15% to + 10% of nominal
**POWER CONSUMPTION:** 10VA (100-240 VAC)
2.5VA (24 VAC)
2W (12 VDC & 24VDC)
**TRANSIENT PROTECTION:** MOV

**OUTPUT**
**TYPE:** Electromechanical relay
**MECHANICAL LIFE:** 20,000,000 operations
**ELECTRICAL LIFE:** 100,000 operations minimum (at full rated load)
**RATING:** 5A @ 240VAC (resistive)

**TIMING**
**TYPE:** Repeat Cycle
**REPEAT ACCURACY:** ± 0.3% of setting
**TIMING RANGE:** 0.1 secs to 500 hours in 16 ranges
**RESET TIME:** 300 msec minimum

**PHYSICAL**
**OPERATING TEMP:** -10° to 50° C (14° to 122°F)
**TIMING VARIATION VS. TEMP:** ± 2% maximum
**MOUNTING:** Plug-In or Panel mount
**TERMINATION:** 8 pin socket or screw terminals
**HOUSING:** Polycarbonate
**DEGREE OF PROTECTION:** IP50(std), IP65(special)

## WIRING

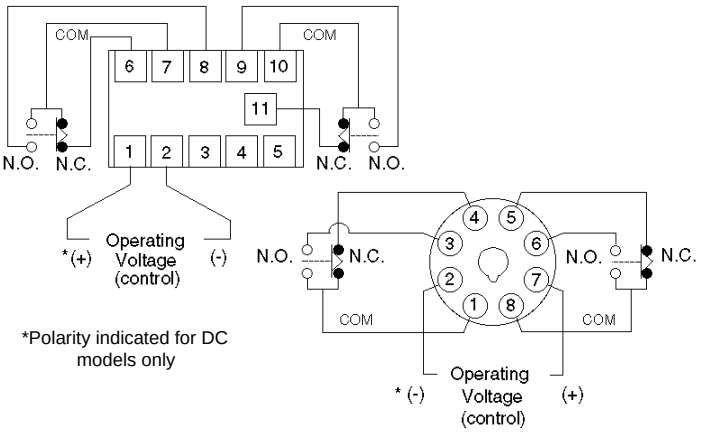


*Polarity indicated for DC models only

## OPERATION

**Repeat Cycle**

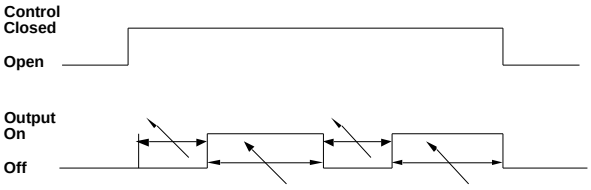


Adjustable repeat cycle
- Closing the control circuit starts the timing sequence
- Opening the control circuit during either timing period resets both time delays to zero and de-energizes the output
- Different ranges can be used for ON and OFF times

Courtesy of Steven Engineering, Inc. • 230 Ryan Way, South San Francisco, CA, 94080-6370 • Main Office: (650) 588-9200 • Outside Local Area: (800) 258-9200 • www.stevenengineering.com

## DIMENSIONS

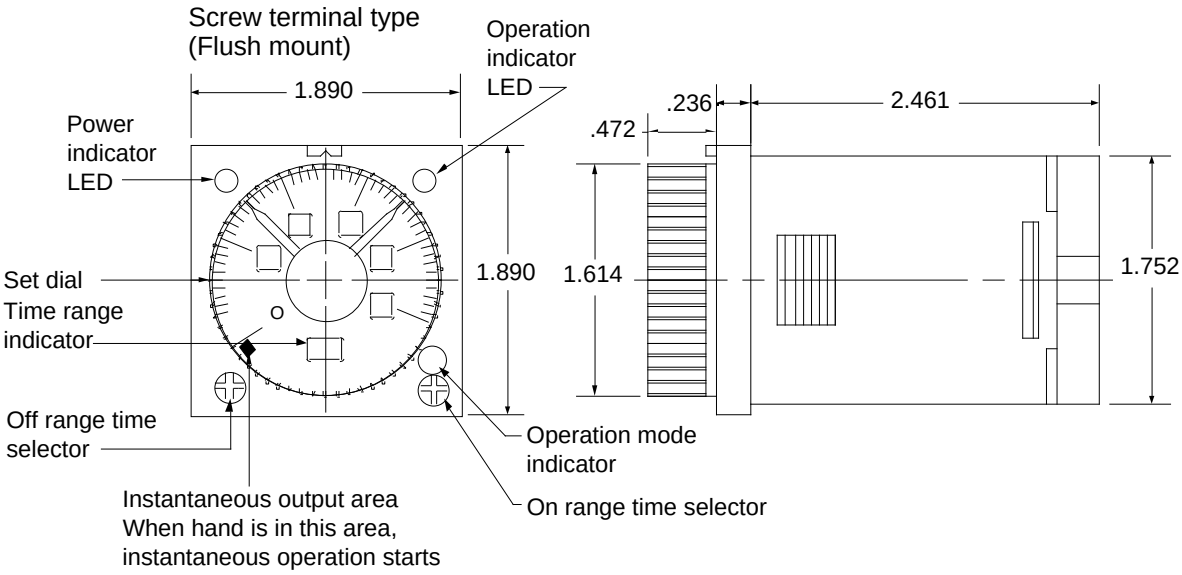


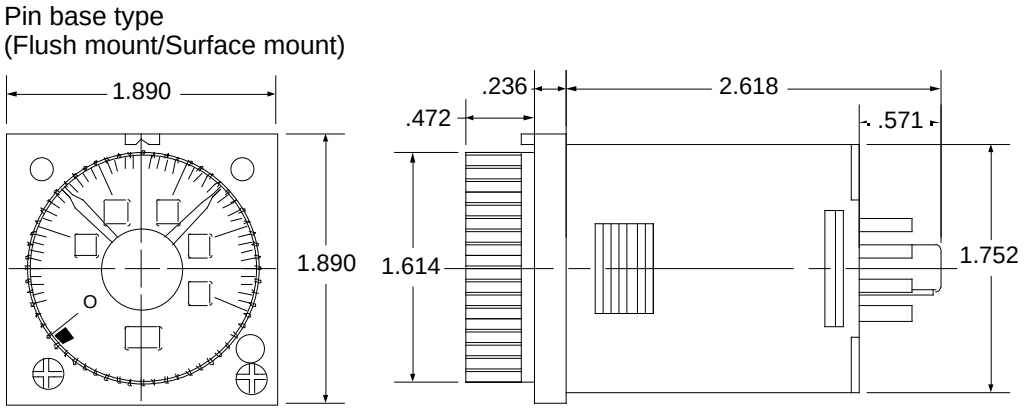


Courtesy of Steven Engineering, Inc. • 230 Ryan Way, South San Francisco, CA, 94080-6370 • Main Office: (650) 588-9200 • Outside Local Area: (800) 258-9200 • www.stevenengineering.com

# MODEL 1073 INDUSTRIAL SOLID STATE TIMER

DIN PANEL MOUNT

KANSON ELECTRONICS, INC.



**On Delay Only or Multifunction**

**The 1073** is available with a choice of on-delay only or 5 programmable functions. Auto-calibrating dial provides direct reading of time in each of 16 programmable time ranges from 0.1 seconds to 500 hours. The On-delay only version has a DPDT timed output while the programmable unit has an SPDT timed plus SPDT instantaneous contacts. Operating voltage options are available from 12VDC to 240VAC. LED indicators for Power and Operate complete the package. Now available with plug-in or screw terminal base.

## ORDERING DATA

**ORDERING CODE** **1073 - 1 - P - 2 - A - 1 - 1**

**BASIC MODEL NUMBER**
1073

**INPUT VOLTAGE**
1 120-240 VAC
3 24 VAC/DC
5 12 VDC

**TIME RANGE**
P (Includes the following ranges)

| seconds | minutes | hours | 10 hours |
|---|---|---|---|
| 0.1 to 1.0 | 0.1 to 1.0 | 0.1 to 1.0 | 1.0 to 10 |
| 0.5 to 5.0 | 0.5 to 5.0 | 0.5 to 5.0 | 5.0 to 50 |
| 1.0 to 10 | 1.0 to 10 | 1.0 to 10 | 10 to 100 |
| 5.0 to 50 | 5.0 to 50 | 5.0 to 50 | 50 to 500 |

**TIMING FUNCTION and OUTPUT**
1 - B On delay with Relay DPDT
2 - A Programmable, 5 functions with 1 SPDT Instant relay and 1 SPDT Timed relay. Includes On Delay, Repeat Cycle Off Start, Repeat Cycle On Start, One Shot Maintained Interval and One Cycle Maintained Interval

**TERMINATION**
1 8 pin plug-in base
2 Screw terminals

**DEGREE OF PROTECTION**
1 IP50 Standard
2 IP65 Sealed unit(special order only)

**APPLICABLE ACCESSORIES**
See accessory section for details

| | |
|---|---|
| 8 pin socket | RP-320 |
| 8 pin reversible socket | RP-321 |
| 8 pin cable socket | RP-323 |
| Panel mount clip | RP-325 |
| Stop rings | RP-327 |

## SPECIFICATIONS

**INPUT**
**VOLTAGE:** 100-240 VAC, 24 VAC/DC, 12VDC
**FREQUENCY:** 50/60 Hz (AC models)
**TOLERANCE (VOLTAGE):** - 15% to + 10% of nominal
**POWER CONSUMPTION:** 10VA (100-240 VAC)
2.5VA (24 VAC)
2W (12 VDC & 24VDC)
**TRANSIENT PROTECTION:** MOV

**OUTPUT**
**TYPE:** Electromechanical relay
**MECHANICAL LIFE:** 20,000,000 operations
**ELECTRICAL LIFE:** 100,000 operations minimum (at full rated load)
**RATING:** 5A @ 240VAC (resistive)

**TIMING**
**TYPE:** On Delay Only or Programmable (programmable includes On Delay, Repeat Cycle Off Start, Repeat Cycle On Start, One Shot Maintained Interval and One Cycle Maintained Interval)
**REPEAT ACCURACY:** ± 0.3% of setting
**TIMING RANGE:** 0.1 secs to 500 hours in 16 ranges
**RESET TIME:** 100 msec minimum

**PHYSICAL**
**OPERATING TEMP:** -10° to 50° C (14° to 122°F)
**TIMING VARIATION VS. TEMP:** ± 2% maximum
**MOUNTING:** Plug-In or Panel mount
**TERMINATION:** 8 pin socket or screw terminals
**HOUSING:** Polycarbonate
**DEGREE OF PROTECTION:** IP50(std), IP65(special)

## WIRING

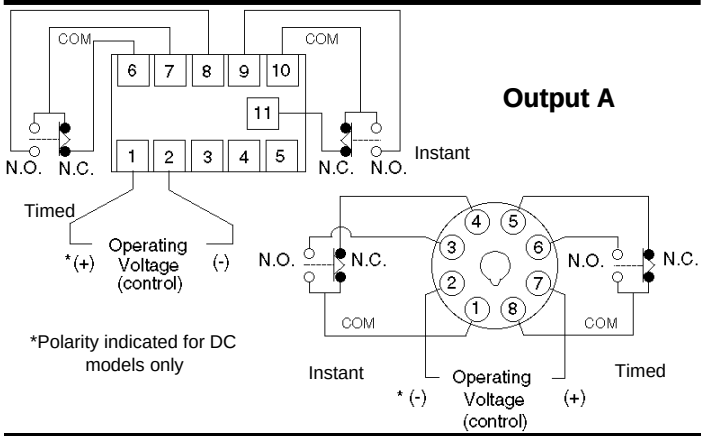


*Polarity indicated for DC models only

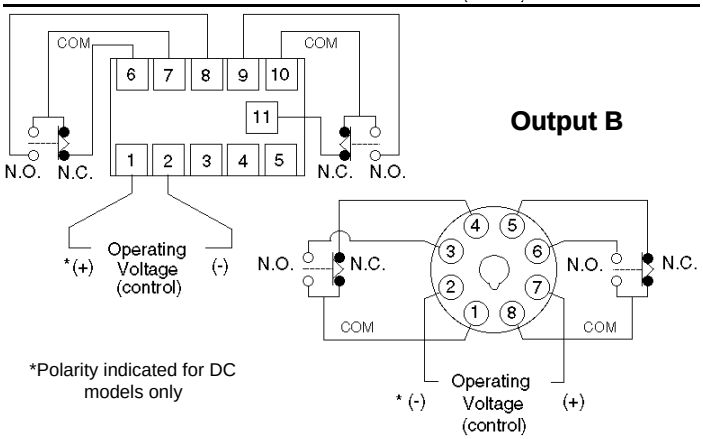


*Polarity indicated for DC models only

Courtesy of Steven Engineering, Inc. • 230 Ryan Way, South San Francisco, CA, 94080-6370 • Main Office: (650) 588-9200 • Outside Local Area: (800) 258-9200 • www.stevenengineering.com

## OPERATION

| FUNCTION SELECTION | CONTROL WIRING | TIMING | |
|---|---|---|---|
| **On Delay** **ON** | Control via application of input power. (Terminals 2 & 10, pin base) (Terminals 1 & 2, screw base) | 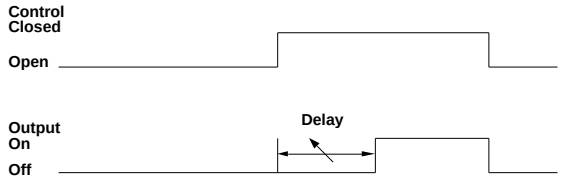  | Adjustable time delay on energizing • Closing the control circuit starts time delay • Opening the control circuit during timing resets time delay to zero—no accumulation of time delay or false output |
| **Repeat Cycle** (off start) **FL** | Control via application of input power. (Terminals 2 & 10, pin base) (Terminals 1 & 2, screw base) | 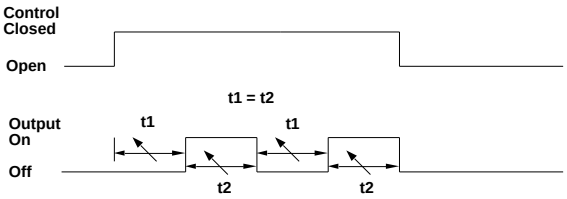  | Adjustable repeat cycle •Closing the control circuit starts the timing sequence •Opening the control control circuit during either timing period resets both time delays to zero, and de-energizes the output |
| **Repeat Cycle** (on start) **FO** | Control via application of input power. (Terminals 2 & 10,pin base) (Terminals 1 & 2, screw base) | 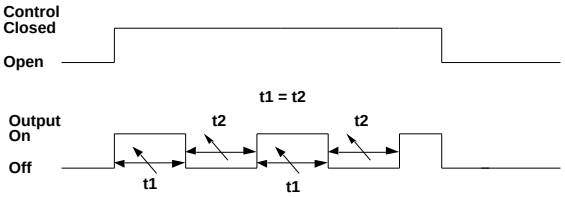  | Adjustable repeat cycle •Closing the control circuit starts the timing sequence and initiates immediate transfer of output contacts •Opening the control circuit during either timing period resets both time delays to zero, and de-energizes the output |
| **One Shot, Maintained Interval** **OS** | Control via application of input power. (Terminals 2 & 10, pin base) (Terminals 1 & 2, screw base) | 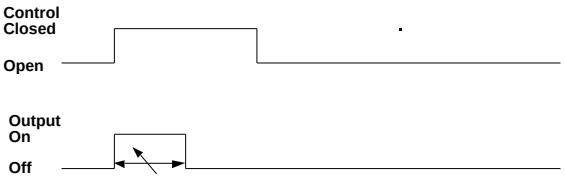  | Adjustable time output pulse •Closing the control circuit starts the timing sequence and initiates immediate transfer of output contacts •Opening the control circuit during timing resets the time delay to zero and de-energizes the output |
| **One Cycle, Maintained Interval** **OC** | Control via application of input power. (Terminals 2 & 10, pin base) (Terminals 1 & 2, screw base) | 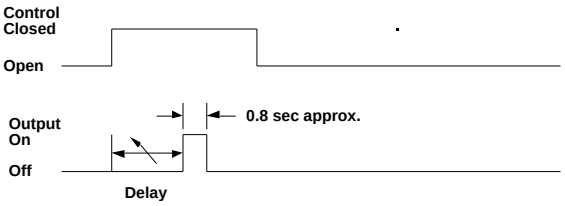  | |

Courtesy of Steven Engineering, Inc. • 230 Ryan Way, South San Francisco, CA, 94080-6370 • Main Office: (650) 588-9200 • Outside Local Area: (800) 258-9200 • www.stevenengineering.com

## DIMENSIONS

Screw terminal type
(Flush mount)

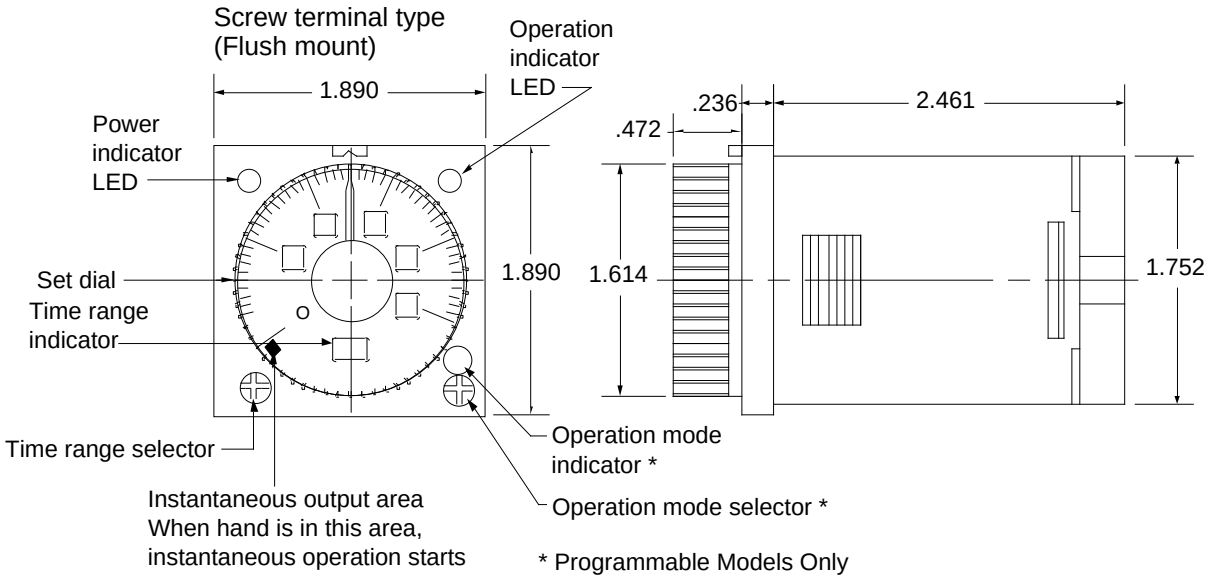


* Programmable Models Only

Pin base type
(Flush mount/Surface mount)

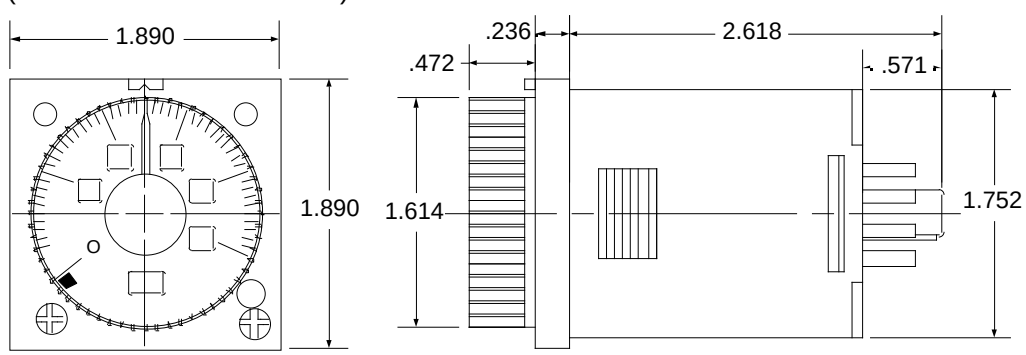


Courtesy of Steven Engineering, Inc. • 230 Ryan Way, South San Francisco, CA, 94080-6370 • Main Office: (650) 588-9200 • Outside Local Area: (800) 258-9200 • www.stevenengineering.com

Courtesy of Steven Engineering, Inc. • 230 Ryan Way, South San Francisco, CA, 94080-6370 • Main Office: (650) 588-9200 • Outside Local Area: (800) 258-9200 • www.stevenengineering.com



## True Off Delay

**The 1081 is a true off delay.** Removal of input power actuates timing sequence eliminating the need for a separate control circuit. Two timing range options provide operation from 0.04 seconds to 10 minutes. Auto-calibrating dial provides direct reading of time setting in every range. A wide range of operating voltage options support operation from 12VDC to 240VAC, an LED indicates power is applied.

## ORDERING DATA

**ORDERING CODE** **1081 - 2 - A - 2 - B - 1**

**BASIC MODEL NUMBER**
1081

**INPUT VOLTAGE**
1 120 VAC
2 240 VAC
3 24 VAC
4 24 VDC
5 12 VDC

**TIME RANGE**
A (Includes the following ranges)
0.04 sec - 1 sec
0.2 sec - 5 sec
0.4 sec - 10 sec
B (Includes the following ranges)
0.04 min - 1 min
0.2 min - 5 min
0.4 min - 10 min

**TIMING FUNCTION**
2 Off delay

**OUTPUT**
B Relay DPDT

**DEGREE OF PROTECTION**
1 IP50 Standard
2 IP65 Sealed unit(special order only)

**APPLICABLE ACCESSORIES**
See accessory section for details

| | |
|---|---|
| 8 pin socket | RP-320 |
| 8 pin reversible socket | RP-321 |
| 8 pin cable socket | RP-323 |
| Panel mount clip | RP-325 |
| Stop rings | RP-327 |

## SPECIFICATIONS

**INPUT**
**VOLTAGE:** 100-120VAC, 200-240VAC, 24VAC, 24VDC, 12VDC
**FREQUENCY:** 50/60 Hz (AC models)
**TOLERANCE (VOLTAGE):** - 15% to +10% of nominal
**POWER CONSUMPTION:** 5VA (AC models) 2W (DC models)
**TRANSIENT PROTECTION:** MOV

**OUTPUT**
**TYPE:** Electromechanical relay
**MECHANICAL LIFE:** 10,000,000 operations
**ELECTRICAL LIFE:** 100,000 operations minimum (at full rated load)
**RATING:** 3A @ 240VAC (resistive)

**TIMING**
**TYPE:** True Off Delay
**REPEAT ACCURACY:** ± 0.3% of setting
**TIMING RANGE:** 0.04 secs to 10 secs or 0.04 min to 10 min
**RESET TIME:** 100 msec at maximum time setting

**PHYSICAL**
**OPERATING TEMP:** -10° to 50° C (14° to 122°F)
**TIMING VARIATION VS. TEMP:** ± 2% maximum
**MOUNTING:** Plug-In or Panel mount
**TERMINATION:** 8 pin socket
**HOUSING:** Polycarbonate
**DEGREE OF PROTECTION:** IP50(std), IP65(special)

## WIRING

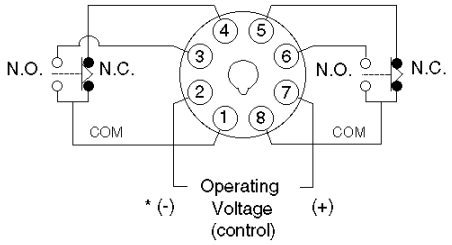


## OPERATION

**Off Delay**

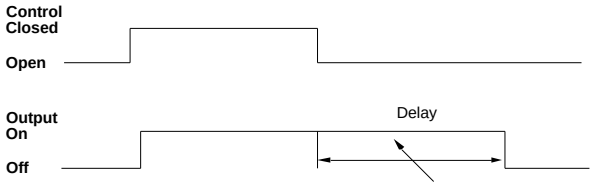


Adjustable time delay on de-energizing
- Closing the control circuit energizes output
- Opening the control circuit starts the time delay
- Reclosing the control circuit during timing resets time delay to zero–no accumulation of time delay or false output

## DIMENSIONS

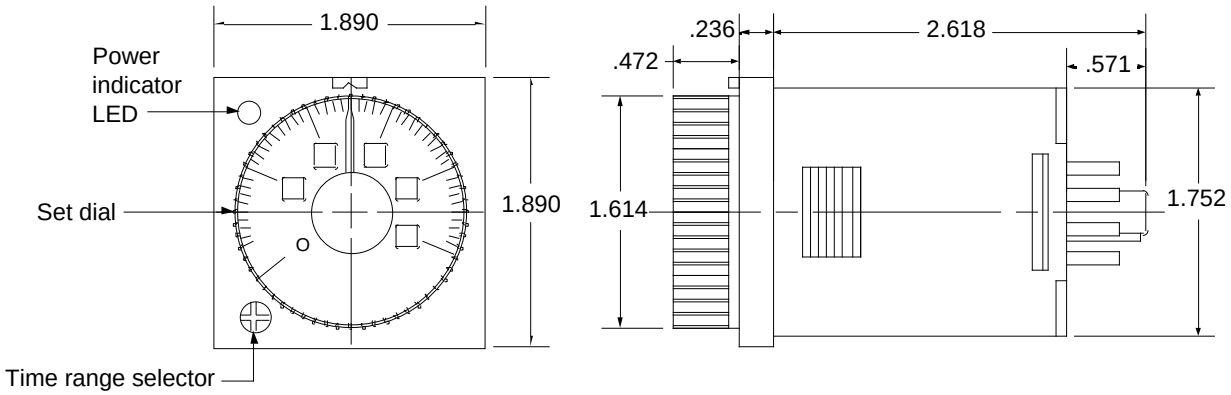


Courtesy of Steven Engineering, Inc. • 230 Ryan Way, South San Francisco, CA, 94080-6370 • Main Office: (650) 588-9200 • Outside Local Area: (800) 258-9200 • www.stevenengineering.com

Courtesy of Steven Engineering, Inc. • 230 Ryan Way, South San Francisco, CA, 94080-6370 • Main Office: (650) 588-9200 • Outside Local Area: (800) 258-9200 • www.stevenengineering.com





**Multifunction**
**Multiple Time Ranges**

**The 1090 features** 8 programmable timing functions. An auto-calibrating dial provides direct reading of time setting in each of 16 programmable time ranges from 0.1 seconds to 500 hours. Operating voltage options cover 12VDC to 240VAC. LED indicators for Power and Contact status.

## ORDERING DATA

**ORDERING CODE** **1090 - 3 - P - 3 - B - 1 - 1**

**BASIC MODEL NUMBER**
1090

**INPUT VOLTAGE**
1 120-240 VAC
3 24 VAC/DC
5 12 VDC

**TIME RANGE**
P (Includes the following ranges)

| seconds | minutes | hours | 10 hours |
|---|---|---|---|
| 0.1 to 1.0 | 0.1 to 1.0 | 0.1 to 1.0 | 1.0 to 10 |
| 0.5 to 5.0 | 0.5 to 5.0 | 0.5 to 5.0 | 5.0 to 50 |
| 1.0 to 10 | 1.0 to 10 | 1.0 to 10 | 10 to 100 |
| 5.0 to 50 | 5.0 to 50 | 5.0 to 50 | 50 to 500 |

**TIMING FUNCTION**
3 Programmable, includes On Delay, Off Delay, Repeat Cycle Off Start, Repeat Cycle On Start, Pulse One-shot, One-shot On/Off, One-shot Off/On and One Cycle Maintained Interval

**OUTPUT**
B Relay DPDT

**TERMINATION**
1 11 pin plug-in base
2 Screw terminals

**DEGREE OF PROTECTION**
1 IP50 Standard
2 IP65 Sealed unit(special order only)

**APPLICABLE ACCESSORIES**
See accessory section for details

| | |
|---|---|
| 11 pin socket | RP-322 |
| 11 pin cable socket | RP-324 |
| Panel mount clip | RP-325 |
| Stop rings | RP-327 |

## SPECIFICATIONS

**INPUT**
**VOLTAGE:** 100-240 VAC, 24 VAC/DC, 12VDC
**FREQUENCY:** 50/60 Hz (AC models)
**TOLERANCE (VOLTAGE):** - 15% to + 10% of nominal
**POWER CONSUMPTION:** 10VA (100-240 VAC)
2.5VA (24 VAC)
2W (12 VDC & 24VDC)
**TRANSIENT PROTECTION:** MOV

**OUTPUT**
**TYPE:** Electromechanical relay
**MECHANICAL LIFE:** 20,000,000 operations
**ELECTRICAL LIFE:** 100,000 operations minimum (at full rated load)
**RATING:** 5A @ 240VAC (resistive)

**TIMING**
**TYPE:** Multifunction programmable (On Delay, Off Delay, Repeat Cycle Off Start, Repeat Cycle On Start, Pulse One-shot, One-shot On/Off, One-shot Off/On and One Cycle Maintained Interval)
**REPEAT ACCURACY:** ± 0.3% of setting
**TIMING RANGE:** 0.1 secs to 500 hours in 16 ranges
**RESET TIME:** 100 msec minimum

**PHYSICAL**
**OPERATING TEMP:** -10° to 50° C (14° to 122°F)
**TIMING VARIATION VS. TEMP:** ± 2% maximum
**MOUNTING:** Plug-In or Panel mount
**TERMINATION:** 11 pin socket or screw terminals
**HOUSING:** Polycarbonate
**DEGREE OF PROTECTION:** IP50(std), IP65(special)

## WIRING

Pin base type

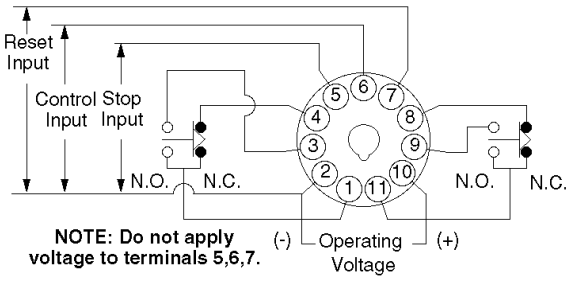


Screw terminal type

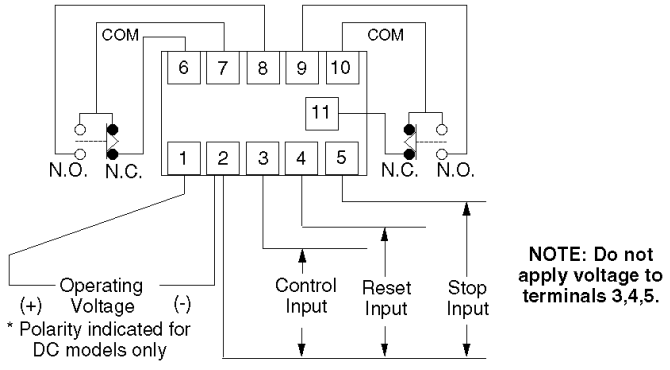


Control,Reset and Stop input is accomplished by isolated contact closure between indicated terminals.

## OPERATION

| FUNCTION SELECTION | CONTROL WIRING | TIMING | |
|---|---|---|---|
| **On Delay**<br>**ON** | Jumper the control input terminals for control via application of input power.<br>(Terminals 2 & 10, pin base)<br>(Terminals 1 & 2, screw base) | 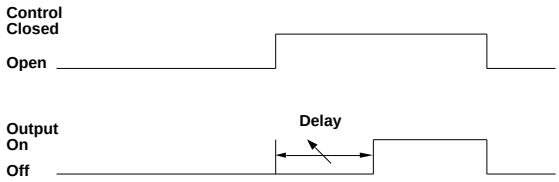 | Adjustable time delay on energizing<br>• Closing the control circuit starts time delay<br>• Opening the control circuit during timing resets time delay to zero—no accumulation of time delay or false output |
| **Off Delay**<br>**SF** | Continous power on input terminals.<br>(Terminals 2 & 10, pin base)<br>(Terminals 1 & 2, screw base)<br>Control via isolated contact closure between control terminals.<br>(Terminals 2&6, pin base)<br>(Terminals 2&3, screw base) | 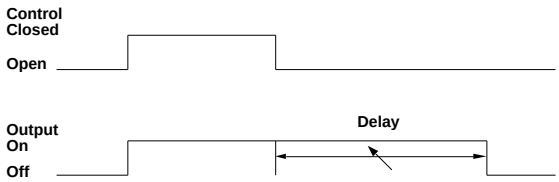 | Adjustable time delay on denergizing<br>• Closing the control circuit energizes output<br>• Opening the control circuit starts time delay<br>• Reclosing the control circuit during timing resets time delay to zero—no accumulation of time delay or false output |
| **Repeat Cycle**<br>(off start)<br>**FL** | Jumper the control input terminals for control via application of input power.<br>(Terminals 2 & 10, pin base)<br>(Terminals 1 & 2, screw base) | 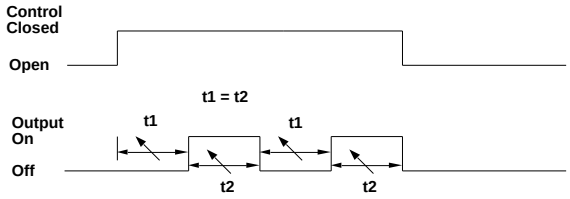 | Adjustable repeat cycle<br>•Closing the control circuit starts the timing sequence<br>•Opening the control circuit during either timing period resets both time delays to zero, and de-energizes the output |
| **Repeat Cycle**<br>(on start)<br>**FO** | Jumper the control input terminals for control via application of input power.<br>(Terminals 2 & 10, pin base)<br>(Terminals 1 & 2, screw base) | 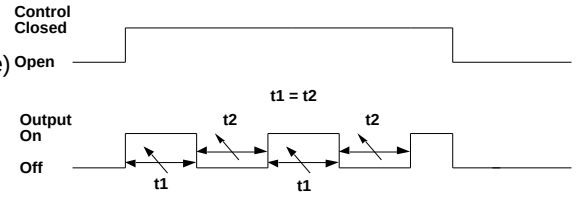 | Adjustable repeat cycle<br>•Closing the control circuit starts the timing sequence and initiates immediate transfer of output contacts<br>•Opening the control circuit during either timing period resets both time delays to zero, and de-energizes the output |
| **One Shot**<br>**OS** | Continous power on input terminals.<br>(Terminals 2 & 10, pin base)<br>(Terminals 1 & 2, screw base)<br>Control via isolated contact closure between control terminals.<br>(Terminals 2&6, pin base)<br>(Terminals 2&3, screw base) | 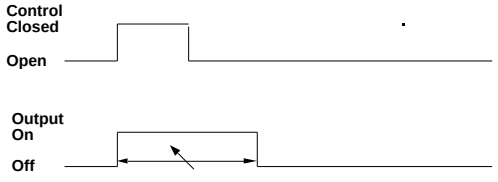 | Adjustable time output pulse<br>•Closing the control circuit starts the timing sequence and initiates immediate transfer of output contacts<br>•Opening and closing the control circuit during timing will not affect timing or output |

Courtesy of Steven Engineering, Inc. • 230 Ryan Way, South San Francisco, CA, 94080-6370 • Main Office: (650) 588-9200 • Outside Local Area: (800) 258-9200 • www.stevenengineering.com

## OPERATION CONTINUED

| FUNCTION SELECTION | CONTROL WIRING | TIMING | |
|---|---|---|---|
| **One Shot, On/Off (Retriggerable One Shot)** (on start) **OF1** | Continuous power on input terminals (Terminals 2 & 10, pin base) (Terminals 1 & 2, screw base) Control via isolated contact closure between control terminals. (Terminals 2 & 6, pin base) (Terminals 2 & 3, screw base) | 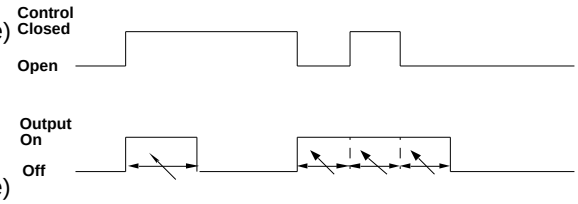  | Adjustable time output pulse<br>•Closing the control circuit initiates timed output pulse<br>•Opening or closing the control circuit during timing will reset the timing cycle |
| **One Shot, On/Off (Retriggerable One Shot)** (off start) **OF2** | Continuous power on input terminals (Terminals 2 & 10, pin base) (Terminals 1 & 2, screw base) Control via isolated contact closure between control terminals. (Terminals 2 & 6, pin base) (Terminals 2 & 3, screw base) | 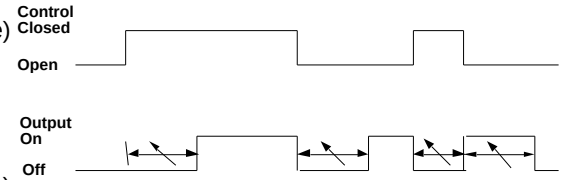  | Adjustable time output pulse<br>•Closing the control circuit initiates the timing sequence<br>• The output contacts change state after the time delay is completed<br>•Opening or closing the control circuit during timing will cause the output contacts to change state and reset the time cycle |
| **One Cycle, Maintained Interval** **OC** | Control via application of input power. (Terminals 2 & 10,pin base) (Terminals 1 & 2, screw base) | 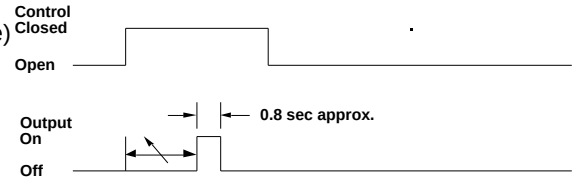  | Fixed time (0.8 sec.) output pulse<br>•Closing the control circuit starts the timing sequence. The output contacts change state for 0.8 sec. after time delay is completed<br>•Opening the control circuit during timing resets the time delay to zero |

**NOTE**: The "Reset" and "Stop" functions are actuated by isolated contact closure between the appropriate terminals. These functions are utilized as applications may require:

- "Reset" will reset the timer at any point during the timing cycle. Ordinarily the timer resets upon removal of control or power.
- "Stop" causes the timing action to stop at any point during the timing cycle. Timing resumes from the stopped point when the "Stop" signal is removed.
- Control, Stop, and Reset signals must be 0.05 sec or greater in duration.

Courtesy of Steven Engineering, Inc. • 230 Ryan Way, South San Francisco, CA, 94080-6370 • Main Office: (650) 588-9200 • Outside Local Area: (800) 258-9200 • www.stevenengineering.com

## DIMENSIONS

Screw terminal type
(Flush mount)

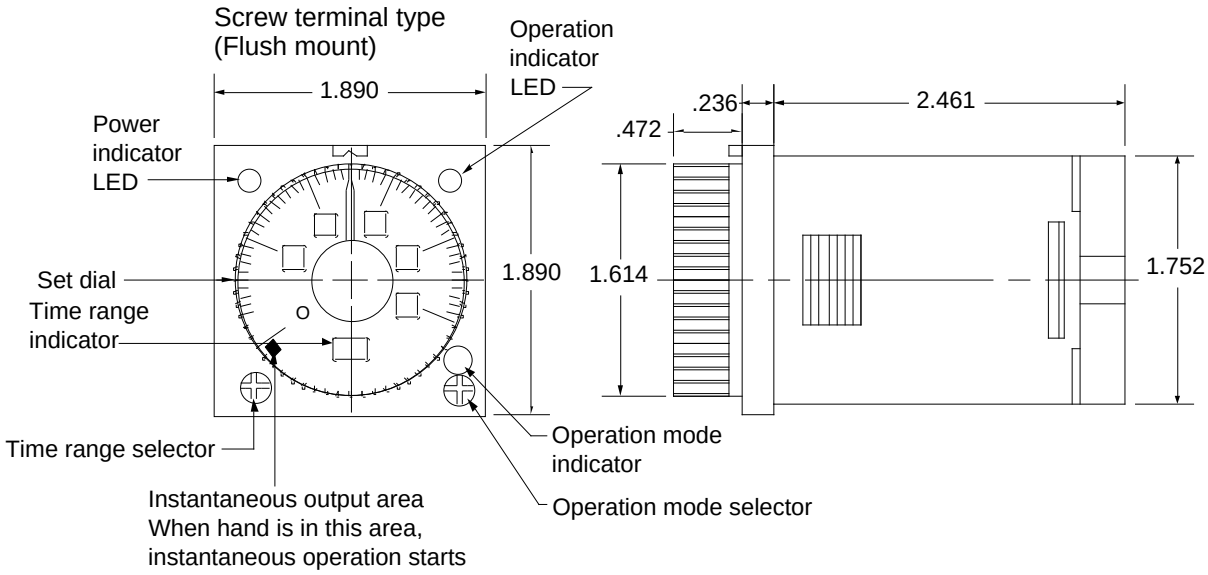


Pin base type
(Flush mount/Surface mount)

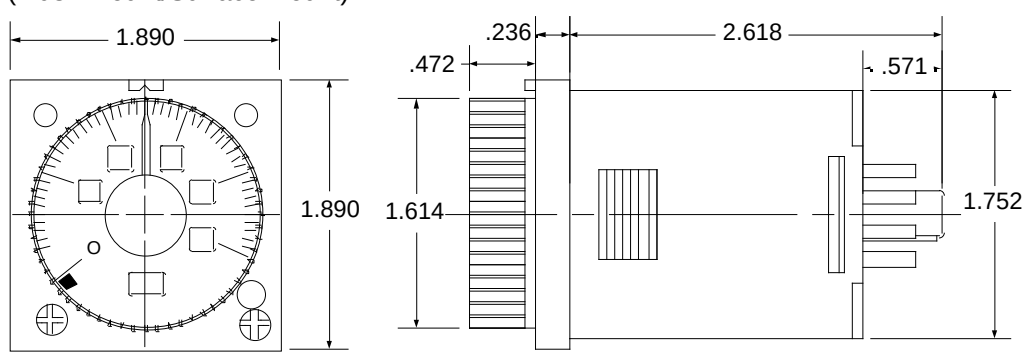


Courtesy of Steven Engineering, Inc. • 230 Ryan Way, South San Francisco, CA, 94080-6370 • Main Office: (650) 588-9200 • Outside Local Area: (800) 258-9200 • www.stevenengineering.com

KANSON ELECTRONICS, INC.

# INDUSTRIAL SOLID STATE TIMER

## MODEL 1095
DIN PANEL MOUNT

## SPECIFICATIONS

**INPUT**

**VOLTAGE:** 24 to 240VAC/DC or 12VDC
**FREQUENCY:** 50/60 Hz (AC models)
**POWER CONSUMPTION:** 2.5VA (AC models), 2.5W (DC models)
**TRANSIENT PROTECTION:** MOV

**OUTPUT**

**TYPE:** Electromechanical relay or transistor
**MECHANICAL LIFE:** 10,000,000 operations(Relay only)
**ELECTRICAL LIFE:**
Relay...100,000 operations minimum (at full rated load)
Transistor...10,000,000 operations minimum
**RATING:** Relay...5A @ 250VAC (resistive)
Transistor...100mA, 30VDC maximum

**TIMING**

**TYPE:** Multifunction
**REPEAT ACCURACY:** ± 0.005% of setting
**TIMING RANGE:** 0.001 secs to 9,999 hours
**RESET TIME:** 20 ms

**PHYSICAL**

**OPERATING TEMP:** -10° to 50° C (14° to 122°F)
**TIMING VARIATION VS. TEMPERATURE:** ± .005%
**MOUNTING:** Plug-In or Panel mount
**TERMINATION:** 8 pin socket
**HOUSING:** Polycarbonate




**Digital Timer**

**The 1095 features** a large, easy to read, LCD display with programmable time ranges from 0.001 seconds to 9999 hours in 7 programmable timing functions. Two power supply options are available, a wide range of 24 to 240 VAC/DC and a 12VDC only version. A battery back-up maintains memory up to 7 years. Output is an SPDT relay or open collector transistor.

## WIRING

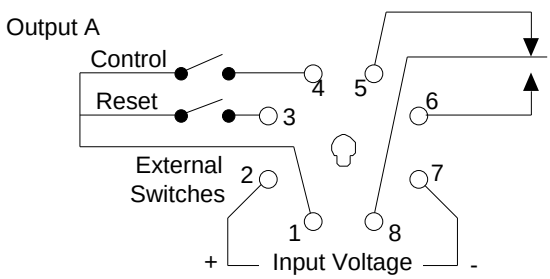


Do not apply voltage to pins 3 and 4, Control and Reset accomplished by isolated contact closure.

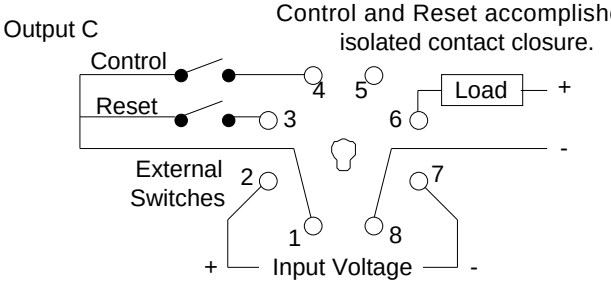


Polarity indicated for 12VDC models only.

## DIMENSIONS Inches (millimeters)

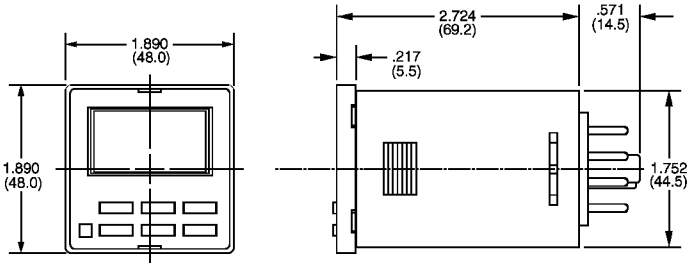


## ORDERING DATA

**ORDERING CODE** **1095 - 1 - P - 3 - A**

**BASIC MODEL NUMBER**
1095

**INPUT VOLTAGE**
1 24 thru 240VAC/DC
2 12VDC

**TIME RANGE**
P (user selectable ranges)
0.001 seconds to 9,999 hours

**TIMING FUNCTION**
3 Programmable
- A On Delay (power control)
- B On Delay (isolated control)
- C Off Delay
- D One shot,Interval
- E Pulsed On Delay,Latched output
- F Repeat Cycle
- G On Delay,time totalizing

**OUTPUT**
A Relay SPDT
C Open Collector Transistor (100mA,30VDC)

**APPLICABLE ACCESSORIES**
See accessory section for details

| | |
|---|---|
| 8 pin socket | RP-320 |
| 8 pin reversible socket | RP-321 |
| 8 pin cable socket | RP-323 |
| Panel mount clip | RP-325(one included with Model 1095) |
| Protective cover | RP-326 |

Courtesy of Steven Engineering, Inc. • 230 Ryan Way, South San Francisco, CA, 94080-6370 • Main Office: (650) 588-9200 • Outside Local Area: (800) 258-9200 • www.stevenengineering.com

## OPERATION

| FUNCTION SELECTION | CONTROL WIRING | TIMING | |
|---|---|---|---|
| A:<br>On Delay<br>Power Control | Control via application of input power on terminals 2 and 7. | 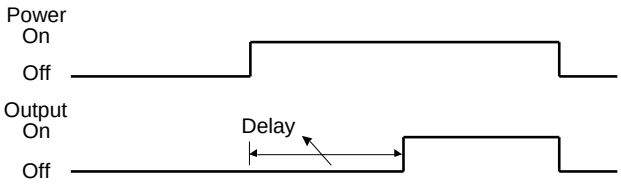 | Adjustable time delay on energizing<br>•Applying power starts time delay<br>•Removing power form the circuit during timing resets the time delay to zero - no accumulation of time delay or false output. |
| B:<br>On Delay<br>Isolated<br>Control | Continuous power on terminals 2 and 7.<br>Control via isolated contact closure between terminals 1 and 4. | 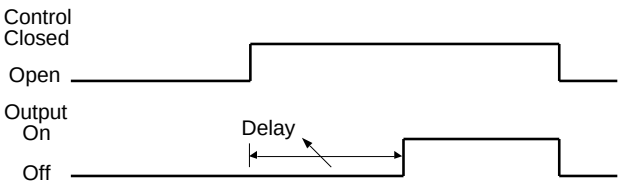 | Adjustable time delay on control closure<br>•Closing the control circuit starts time delay<br>•Opening control circuit during timing resets the time delay to zero - no accumulation of time delay or false output. |
| C:<br>Off Delay | Continuous power on terminals 2 and 7.<br>Control via isolated contact closure between terminals 1 and 4. | 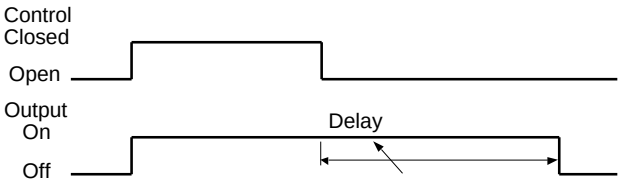 | Adjustable time delay on control opening<br>•Closing the control circuit energizes the output.<br>•Opening the control circuit starts time delay<br>•Reclosing the control circuit during timing resets the time delay to zero - no accumulation of time delay or false output. |
| D:<br>One Shot,<br>Interval | **One Shot**<br>Continuous power on terminals 2 and 7.<br>Control via isolated contact closure between terminals 1 and 4. | 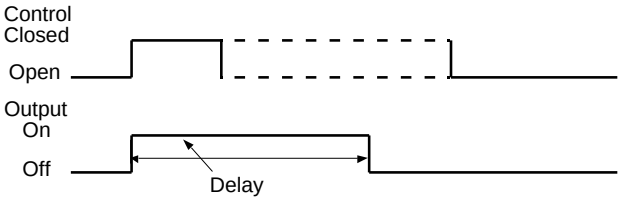 | Adjustable time output pulse<br>•Closing the control circuit initiates timed output pulse.<br>•Opening and closing control circuit during timing will not effect timing or output. |
| | **Maintained Interval**<br>Jumper terminals 1 and 4.<br>Control via application of power on terminals 2 and 7. | 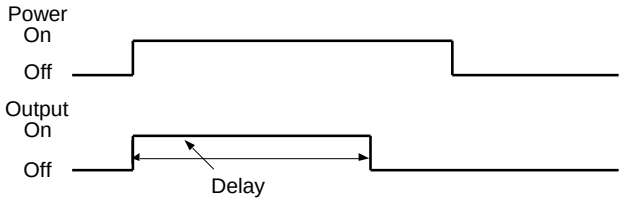 | Adjustable timed output interval<br>•Application of power starts the timed output interval<br>•Removing power during timing resets the time delay to zero and de-energizes the output. |
| E:<br>Pulsed On<br>Delay<br>Latched<br>Output | Continuous power on terminals 2 and 7.<br>Control via isolated contact closure between terminals 1 and 4.<br>Latched output is reset by contact closure between terminals 1 and 3. | 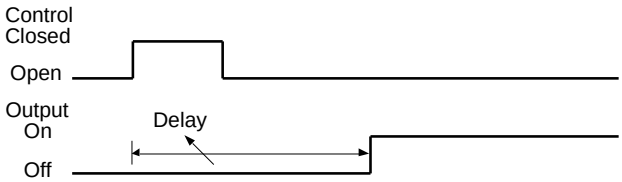 | Adjustable time delay on control closing<br>•Closing the control circuit starts the timing sequence.<br>•Opening and closing control circuit during timing will not effect timing or output.<br>•Upon time-out, the output will remain latched until reset. |

Courtesy of Steven Engineering, Inc. • 230 Ryan Way, South San Francisco, CA, 94080-6370 • Main Office: (650) 588-9200 • Outside Local Area: (800) 258-9200 • www.stevenengineering.com

## OPERATION CONTINUED

| FUNCTION SELECTION | CONTROL WIRING | TIMING | |
|---|---|---|---|
| F: Repeat Cycle | Control via application of input power to terminals 2 and 7. | 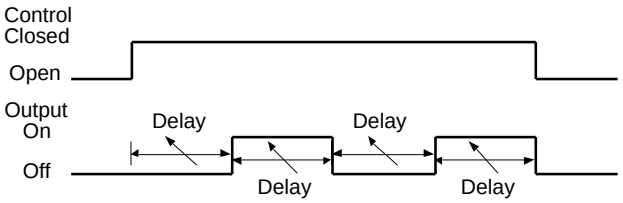  | Adjustable repeat cycle<br>•Applying power starts the timing sequence.<br>•Removing power during either timing period resets both time delays to zero and de-energizes the output. |
| G: On Delay Time Totalizing | Continuous power on terminals 2 and 7. Control via isolated contact closure between terminals 1 and 4. Latched output is reset by contact closure between terminals 1 and 3. | 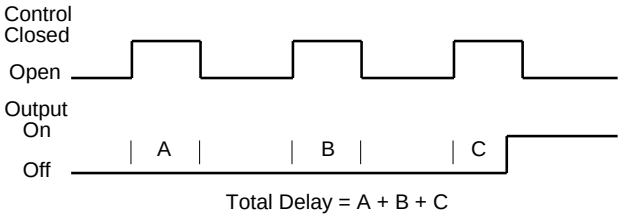  | Adjustable time delay on energizing<br>•Closing the control circuit starts the timing sequence.<br>•Opening control circuit during timing stops the timing sequence but does not reset the time accumulated.<br>•Upon time-out, the output will remain latched until reset. |

## PROGRAMMING




**1) TIME RANGE**
a) Push “Enter”.
b) Select the desired range by repeatedly pushing “T.Range” until the proper time range(sec, min, hours, etc) is displayed.
c) Push “Enter” or “Reset”.

**2) TIME VALUE**
a) Push “Enter”.
b) Repeatedly push “ ←” until the “_” is displayed under the digit to be changed
c) Push “Set” to increment the digit to the desired value.
d) Push “←” to move to another digit location or push “Enter” if this is the last digit to be changed.

**3) TIMING FUNCTION**
a) Push “Enter”.
b) Repeatedly push “Mode” until the proper letter designator for desired mode is indicated(A thru G).
c) Push “Enter” or “Reset”.

**4) COUNT UP/DOWN(Elapsed time)**
a) Push “Enter”.
b) Push “Up/Down” to select direction of elapsed time indication. (“Up” starts at “0” and counts upward. “Down” starts at programmed value and counts down to “0”).
c) Push “Enter” or “Reset”.

## DIMENSIONS Inches (millimeters)

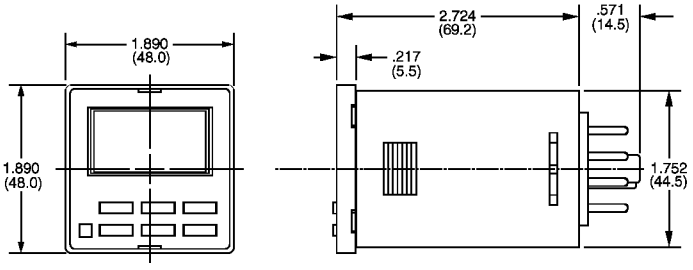


Courtesy of Steven Engineering, Inc. • 230 Ryan Way, South San Francisco, CA, 94080-6370 • Main Office: (650) 588-9200 • Outside Local Area: (800) 258-9200 • www.stevenengineering.com

# MODEL 1096 INDUSTRIAL SOLID STATE TIMER

DIN PANEL MOUNT

KANSON ELECTRONICS, INC.




## Digital Dual Timer

**The 1096 features** a large, easy to read, LCD display with programmable time ranges from 0.001 seconds to 9999 hours in 6 on/off delay or repeat cycle timing functions. On time and off time are set independently. Two power supply options are available, a wide range of 24 to 240 VAC/DC and a 12VDC only version. A battery back-up maintains memory up to 7 years. Output is an SPDT relay or open collector transistor.

## ORDERING DATA

**ORDERING CODE** **1096 - 1 - P - 3 - A**

**BASIC MODEL NUMBER**
1096

**INPUT VOLTAGE**
1 24 thru 240VAC/DC
2 12VDC

**TIME RANGE**
P (user selectable ranges)
0.01 seconds to 9,999 hours
T1 & T2 are independently programmable

**TIMING FUNCTION**
3 Programmable
Pulse A Pulsed On Delay/Off Delay One Cycle
Pulse B Repeat Cycle, Start Off
Pulse C Repeat Cycle, Start On
Total A Maintained On Delay/Off Delay One Cycle, time totalizing
Total B Repeat Cycle Start Off, time totalizing
Total C Repeat Cycle Start On, time totalizing

**OUTPUT**
A Relay SPDT
C Open Collector Transistor (100mA,30VDC)

**APPLICABLE ACCESSORIES**
See accessory section for details

| | |
|---|---|
| 8 pin socket | RP-320 |
| 8 pin reversible socket | RP-321 |
| 8 pin cable socket | RP-323 |
| Panel mount clip | RP-325(one included with Model 1096) |
| Protective cover | RP-326 |

## SPECIFICATIONS

**INPUT**
**VOLTAGE:** 24 to 240VAC/DC or 12VDC
**FREQUENCY:** 50/60 Hz (AC models)
**POWER CONSUMPTION:** 2.5VA (AC models), 2.5W (DC models)
**TRANSIENT PROTECTION:** MOV

**OUTPUT**
**TYPE:** Electromechanical relay or transistor
**MECHANICAL LIFE:** 10,000,000 operations(Relay only)
**ELECTRICAL LIFE:**
Relay...100,000 operations minimum (at full rated load)
Transistor...10,000,000 operations minimum
**RATING:** Relay...5A @ 250VAC (resistive)
Transistor...100mA, 30VDC maximum

**TIMING**
**TYPE:** Multifunction
**REPEAT ACCURACY:** ± 0.005% of setting
**TIMING RANGE:** 0.01 secs to 9,999 hours
**RESET TIME:** 20 ms

**PHYSICAL**
**OPERATING TEMP:** -10° to 50° C (14° to 122°F)
**TIMING VARIATION VS. TEMPERATURE:** ± .005%
**MOUNTING:** Plug-In or Panel mount
**TERMINATION:** 8 pin socket
**HOUSING:** Polycarbonate

## WIRING

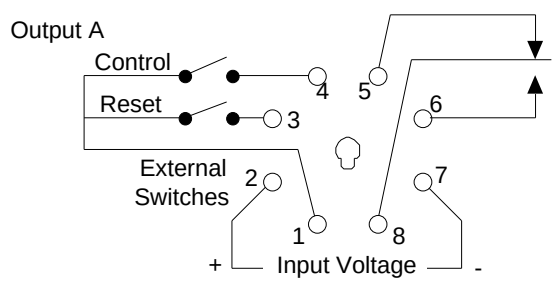


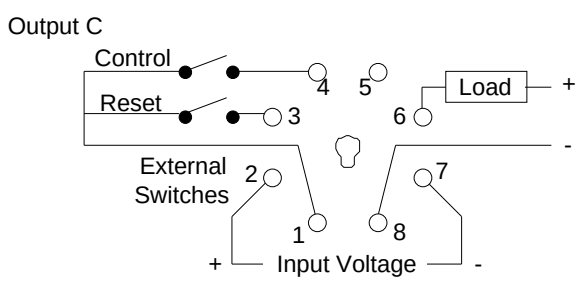


Polarity indicated for 12VDC models only.

Do not apply voltage to pins 3 and 4, Control and Reset accomplished by isolated contact closure.

Courtesy of Steven Engineering, Inc. • 230 Ryan Way, South San Francisco, CA, 94080-6370 • Main Office: (650) 588-9200 • Outside Local Area: (800) 258-9200 • www.stevenengineering.com

## OPERATION

| FUNCTION SELECTION | CONTROL WIRING | TIMING | |
|---|---|---|---|
| Pulse A:<br>Pulsed<br>On delay/Off delay,<br>One Cycle | Continuous power on input terminals 2 and 7.<br>Control via isolated contact closure between terminals 1 and 4. | 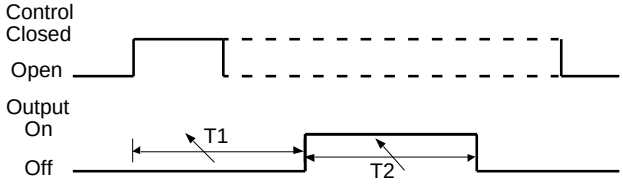 | Programmable dual time delay<br>•Closing control circuit starts timing sequence<br>•Opening and closing control circuit during timing will not effect timing or output. |
| Pulse B:<br>Repeat Cycle<br>Start Off | Jumper terminals 1 and 4.<br>Control via application of input power on terminals 2 and 7. | 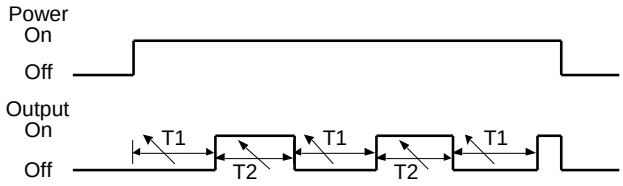 | Programmable dual time repeat cycle<br>•Closing control circuit starts timing sequence<br>•Opening the control circuit during either timing period resets both time delays to zero and de-energizes the output. |
| Pulse C:<br>Repeat Cycle<br>Start On | Jumper terminals 1 and 4.<br>Control via application of input power on terminals 2 and 7. | 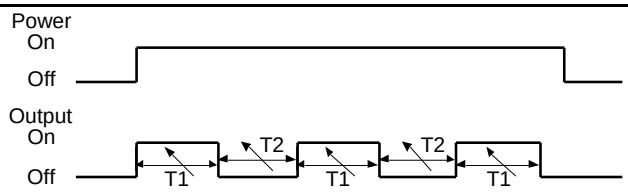 | Programmable dual time repeat cycle<br>•Closing control circuit starts timing sequence<br>•Opening the control circuit during either timing period resets both time delays to zero and de-energizes the output. |
| Total A:<br>Maintained<br>On delay/Off delay,<br>One Cycle<br>Time Totalizing | Continuous power on input terminals 2 and 7.<br>Control via isolated contact closure between terminals 1 and 4.<br>Reset via isolated contact closure between terminals 1 and 3. | 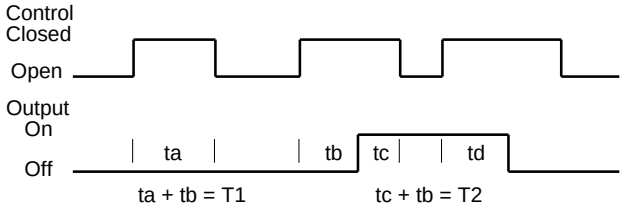 | Programmable dual time delay<br>•Closing control circuit starts timing sequence<br>•Opening the control circuit during either timing period stops the timing sequence but does not reset the time accumulated.<br>•Reset is achived via external reset control |
| Total B:<br>Repeat Cycle,<br>Start Off<br>Time Totalizing | Continuous power on input terminals 2 and 7.<br>Control via isolated contact closure between terminals 1 and 4.<br>Reset via isolated contact closure between terminals 1 and 3. | 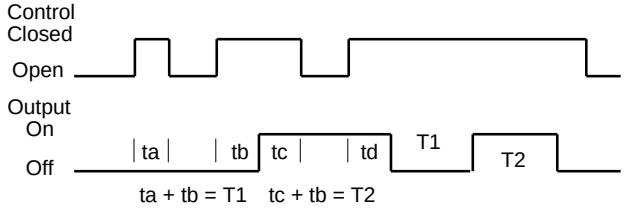 | Programmable dual time repeat cycle<br>•Closing control circuit starts timing sequence<br>•Opening the control circuit during either timing period stops the timing sequence but does not reset the time accumulated.<br>•Reset is achived via external reset control |
| Total C:<br>Repeat Cycle,<br>Start On<br>Time Totalizing | Continuous power on input terminals 2 and 7.<br>Control via isolated contact closure between terminals 1 and 4.<br>Reset via isolated contact closure between terminals 1 and 3. | 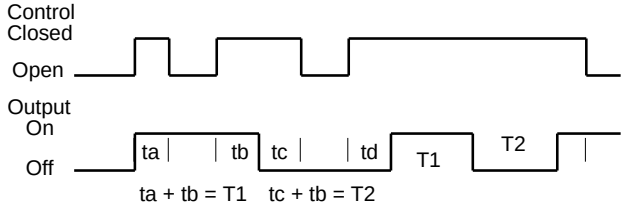 | Programmable dual time repeat cycle<br>•Closing control circuit starts timing sequence<br>•Opening the control circuit during either timing period stops the timing sequence but does not reset the time accumulated.<br>•Reset is achived via external reset control |

Courtesy of Steven Engineering, Inc. • 230 Ryan Way, South San Francisco, CA, 94080-6370 • Main Office: (650) 588-9200 • Outside Local Area: (800) 258-9200 • www.stevenengineering.com

Courtesy of Steven Engineering, Inc. • 230 Ryan Way, South San Francisco, CA, 94080-6370 • Main Office: (650) 588-9200 • Outside Local Area: (800) 258-9200 • www.stevenengineering.com

## PROGRAMMING




**1) TIME RANGE**

a) Push “Enter” one time for T1 setting or two times for T2 setting.
b) Select the desired range by repeatedly pushing “T.Range” until the proper time range(sec, min, hours, etc) is displayed.
c) Push “Enter” or “Reset”.

**2) TIME VALUE**

a) Push “Enter” one time for T1 setting or two times for T2 setting.
b) Repeatedly push “ ←” until the “_” is displayed under the digit to be changed.
c) Push “Set” to increment the digit to the desired value.
d) Push “←” to move to another digit location or push “Enter” if this is the last digit to be changed.

**3) TIMING FUNCTION**

a) Push “Enter”.
b) Repeatedly push “Mode” until the proper letter designator for desired mode is indicated(Pulse A thru Total C).
c) Push “Enter” or “Reset”.

**4) COUNT UP/DOWN(Elapsed time)**

a) Push “Enter”.
b) Push “Up/Down” to select direction of elapsed time indication. (“Up” starts at “0” and counts upward. “Down” starts at programmed value and counts down to “0”)
c) Push “Enter” or “Reset”.

**NOTE :** While in the operating mode, the T1 and T2 time settings may be confirmed by pushing “SET” repeatedly will toggle between the T1 and T2 displays. Operation of the timer will not be affected.

## DIMENSIONS Inches (millimeters)

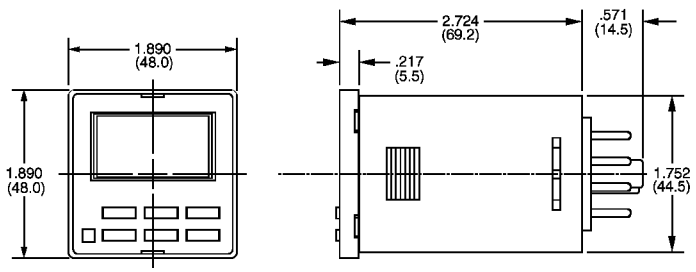

Courtesy of Steven Engineering, Inc. • 230 Ryan Way, South San Francisco, CA, 94080-6370 • Main Office: (650) 588-9200 • Outside Local Area: (800) 258-9200 • www.stevenengineering.com



## SPECIFICATIONS

**INPUT**
**VOLTAGE:** 24 to 240VAC/DC or 12VDC
**FREQUENCY:** 50/60 Hz (AC models)
**POWER CONSUMPTION:** 2.5VA (AC models), 2.5W (DC models)
**TRANSIENT PROTECTION:** MOV

**COUNTER INPUT**
**TYPE:** Multifunction
**SPEED:** 30/sec or 1000/sec
**NUMBER OF INPUTS:** Two
**INPUT METHOD:** Isolated contact or transistor

**OUTPUT**
**TYPE:** Electromechanical relay or transistor
**MECHANICAL LIFE:** 10,000,000 operations (Relay only)
**ELECTRICAL LIFE:**
Relay...100,000 operations minimum (at full rated load)
Transistor...10,000,000 operations minimum
**RATING:** Relay...5A @ 250VAC (resistive
Transistor...100mA, 30VDC maximum

**COUNTING**
**MODES:** 7 (programmable)
**DISPLAY:** 6 digit LCD

**PHYSICAL**
**OPERATING TEMP:** -10° to 50° C (14° to 122°F)
**MOUNTING:** Plug-In or Panel mount
**TERMINATION:** Relay output - 11 pin socket
Transistor output - 8 pin socket
**HOUSING:** Polycarbonate

## WIRING

Output A

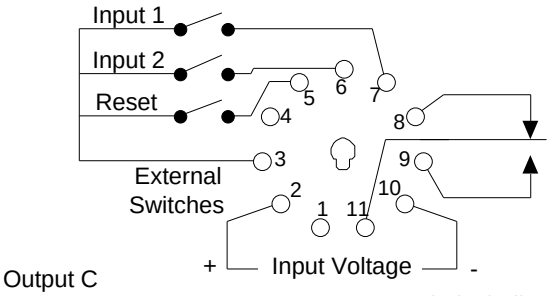


Output C

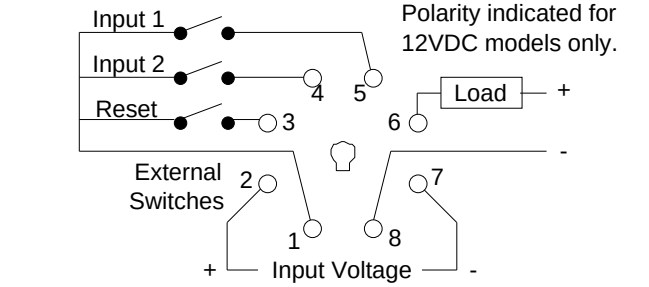


Do not apply voltage to pins 5,6,7

Do not apply voltage to pins 3,4,5

Reset and Count inputs accomplished by isolated contact closure.




## Digital Preset Counter

**The 1105C features** two 2 inputs and 5 input functions and a large, 6 digit LCD display. Two input count speeds (30/sec or 1000/sec) can be used to eliminate noise. There are 7 output functions with SPDT relay or optional transistor output. Two power supply options are available, a wide range of 24 to 240 VAC/DC and a 12VDC only version. A battery back-up maintains memory up to 7 years.

## ORDERING DATA

**ORDERING CODE** **1105C - 1 - P - 3 - A**

**BASIC MODEL NUMBER**
1105C

**INPUT VOLTAGE**
1 24 to 240VAC/DC
2 12VDC

**TIME RANGE**
P (Includes the following modes)
UP Counts Up
DOWN Counts Down
DIR Directional Count
IND Independent Inputs
PHASE Phased Inputs

**TIMING FUNCTION**
3 Programmable
Hold A Latched Output/Hold count
Hold B Latched Output/Over count
Hold C Latched (one count)/Over count
Shot A One Shot/Continue count
Shot B One Shot/Reset "On"
Shot C One Shot/Reset "Off"
Shot D One Shot/Hold count

**OUTPUT**
A Relay SPDT
C Open Collector Transistor (100mA,30VDC)

**APPLICABLE ACCESSORIES**
See accessory section for details

| | |
|---|---|
| 8 pin socket | RP-320 |
| 8 pin reversible socket | RP-321 |
| 11 pin socket | RP-322 |
| 8 pin cable plug | RP-323 |
| 11 pin cable plug | RP-324 |
| Panel mount clip | RP-325 (one included with Model 1105C) |
| Protective cover | RP-326 |

Courtesy of Steven Engineering, Inc. • 230 Ryan Way, South San Francisco, CA, 94080-6370 • Main Office: (650) 588-9200 • Outside Local Area: (800) 258-9200 • www.stevenengineering.com

## INPUT OPERATION

| INPUT FUNCTION | OPERATION DESCRIPTION |
|---|---|
| UP<br>Count up to set value | •Input 1 is count input<br>•Input 2 inhibits count input |
| DOWN<br>Count down from set value | •Input 1 is count input<br>•Input 2 inhibits count input |
| DIR<br>Directional Count. Count Up or Count Down | •Input 1 is count input<br>•Input 2 controls direction of count. With no input on 2 count is Up. With an input on 2 count is Down. |
| IND<br>Independent inputs | •Input 1 is Count Up<br>•Input 2 is Count Down |
| PHASE<br>Phasing of inputs determines count direction | •If Input 1 is phased ahead of Input 2 count is Up<br>•If Input 2 is phased ahead of Input 1 count is Down |

## OUTPUT OPERATION

Hold A

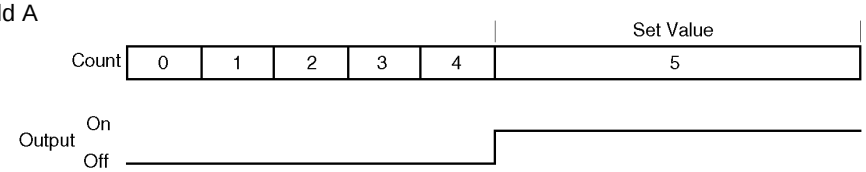


•Upon counting to set value, output latches On and count input is inhibited.

•Output remains on until reset.

Hold B

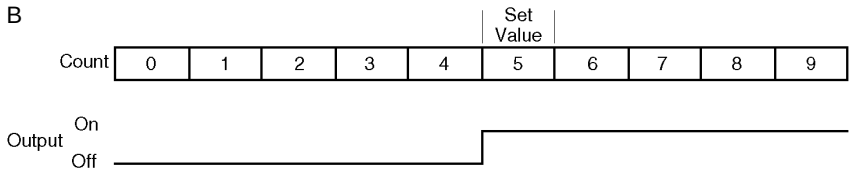


•Upon counting to set value, output latches On but the count continues to increment.

•Output remains on until reset.

Hold C

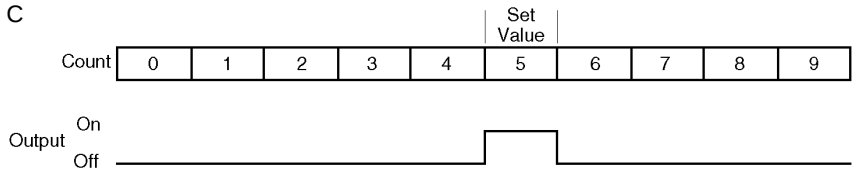


•Upon counting to set value, output turns On.

•Output turns Off at next count following set value

•Count continues to increment.

Shot A

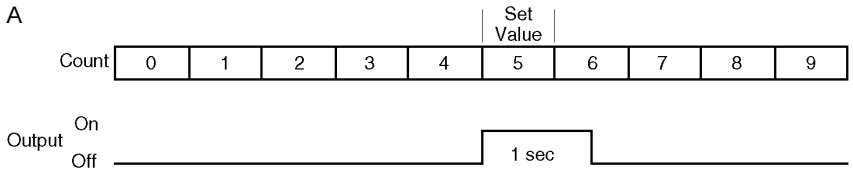


•Upon counting to set value, output turns On for approximately 1 second.

•Count continues to increment.

Shot B

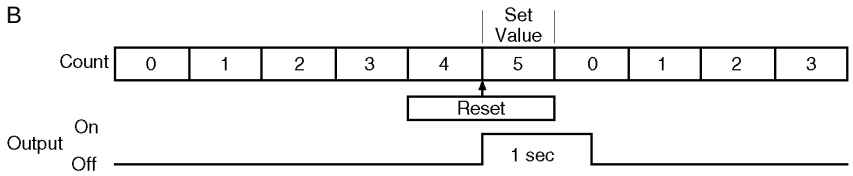


•Upon counting to set value, output turns On for approximately 1 second and the count is automatically reset.

•Count may be continued from this point with no requirement for external reset.

Shot C

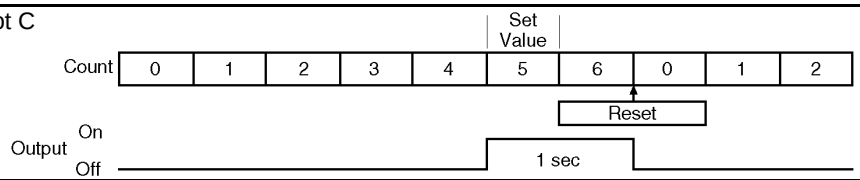


•Upon counting to set value, output turns On for approximately 1 second.

•Count automatically resets at the same time the output turns Off.

Shot D

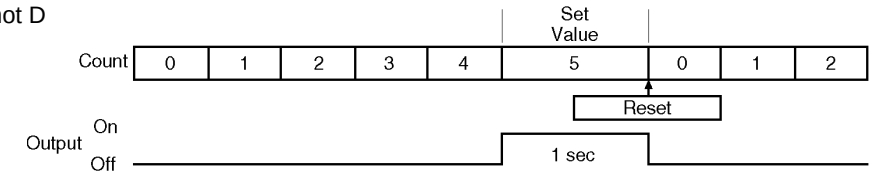


•Upon counting to set value, output turns On for approximately 1 second.

•Count input is inhibited while output is On.

•Count automatically resets at the same time the output turns Off.

## PROGRAMMING




**1) COUNT SET VALUE**
a) Push "Enter".
b) Repeatedly push " ←" until the "_" is displayed under the digit to be changed.
c) Push "Set" to increment the digit to the desired value.
d) Push "←" to move to another digit location or push "Enter" if this is the last digit to be changed.

**2) COUNT SPEED SELECT**
a) Push "Enter".
b) Push "30/1K" to select 30/sec or 1000/sec.
c) Push "Enter" or "Reset".

**3) INPUT MODE**
a) Push "Enter".
b) Repeatedly push "Input M" until the desired function designation is displayed.
c) Push "Enter" or "Reset".

**4) OUTPUT MODE**
a) Push "Enter".
b) Repeatedly push "Output M" until the desired function designation is displayed.
c) Push "Enter" or "Reset".

## DIMENSIONS Inches (millimeters)

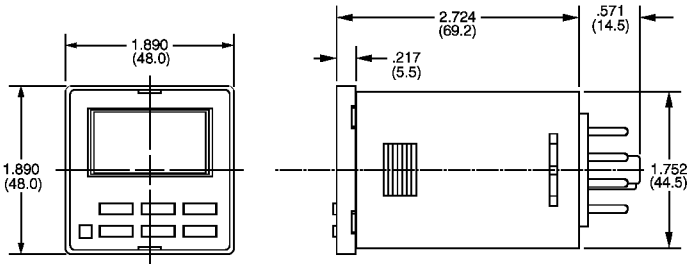


Courtesy of Steven Engineering, Inc. • 230 Ryan Way, South San Francisco, CA, 94080-6370 • Main Office: (650) 588-9200 • Outside Local Area: (800) 258-9200 • www.stevenengineering.com

Courtesy of Steven Engineering, Inc. • 230 Ryan Way, South San Francisco, CA, 94080-6370 • Main Office: (650) 588-9200 • Outside Local Area: (800) 258-9200 • www.stevenengineering.com

Courtesy of Steven Engineering, Inc. • 230 Ryan Way, South San Francisco, CA, 94080-6370 • Main Office: (650) 588-9200 • Outside Local Area: (800) 258-9200 • www.stevenengineering.com

KANSON ELECTRONICS, INC.

# INDUSTRIAL SOLID STATE MOTION DETECTOR

# MODEL 1214 BASE MOUNT

## SPECIFICATIONS

**INPUT**

**VOLTAGE:** 120VAC, 24VAC
**FREQUENCY:** 50/60 Hz
**TOLERANCE (VOLTAGE):** ± 10% of nominal
**POWER CONSUMPTION:** 10 VA maximum
**TRANSIENT PROTECTION:** Isolation transformer (120VAC only)

**OUTPUT**

**TYPE:** Electromechanical relay
**RATING:** 10A - 240VAC maximum

**FUNCTION**

**TYPE:** Motion detector
**TIMING RAMP:** 100kΩ/sec
**TIME RANGE:** 0.06 to 100 secs in 10 ranges
**RANGE TOLERANCE:** ≤ 10% at max, ≤ 0% at min
**CONTROL:** Isolated contact closure (maximum resistance - 100Ω)
**CONTROL TERMINALS:** E-F
**VOLTAGE PRESENT AT CONTROL TERMINALS:** 24VDC minimum, 40VDC maximum
**CYCLE TIME:** Min. time control circuit closed 2msec
Min. time control circuit open 50msec
Max. control circuit pulses/sec 18

**PHYSICAL**

**OPERATING TEMP:** 0° to 50° C (32° to 120°F)
**TIMING VARIATION VS. TEMP:** ± 5% maximum
**MOUNTING:** Base mount
**TERMINATION:** Terminal blocks on face of timer
**HOUSING:** Metal

## WIRING

**OUTPUT B,B1,B2**
A-B Voltage input (constant)
C-D Remote adjust (jumper if not used)
E-F Control (resets timing function)
1-2 N.O. timed (except B2, N.C.)
3-4 N.C. timed (except B1, N.O.)

***Caution:*** Never apply voltage to C-D-E-F

Wiring Terminal Location

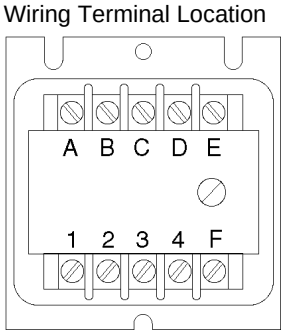


## DIMENSIONS Inches (millimeters)

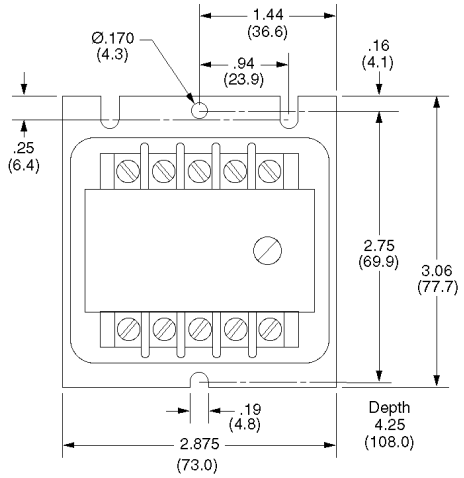





**Underspeed Detector**

**Compact** unit is designed for use in standard mechanical switch applications.

## OPERATION

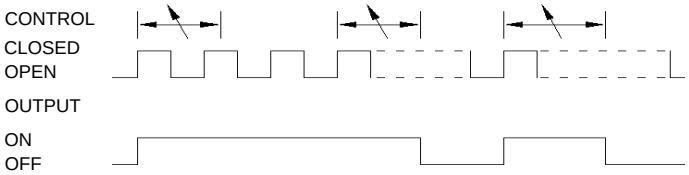


Closing the control circuit energizes the output.
Opening and reclosing the control circuit before the set time interval completes keeps the output energized, and it remains energized as long as the monitored motion continues to provide at least two pulses per set time interval.
If the monitored motion stops, the output de-energizes after the set time interval completes, even if motion stops in such a way that the control circuit remains closed.

## ORDERING DATA

**ORDERING CODE** **1214 - 1 - J - B**

**BASIC MODEL NUMBER**
1214

**INPUT VOLTAGE**
1 120VAC
2 24VAC

**TIME RANGE** (Secs)

| | | | |
|---|---|---|---|
| A | 0.06-0.10 | F | 0.06-5.0 |
| B | 0.06-.25 | G | 0.06-10.0 |
| C | 0.06-.50 | H | 0.06-25.0 |
| D | 0.06-1.0 | J | 0.06-50.0 |
| E | 0.06-2.5 | K | 0.06-100 |

**OUTPUT**
B Relay 1 N.O., 1 N.C.
B1 Relay 2 N.O.
B2 Relay 2 N.C.

**APPLICABLE ACCESSORIES**
See accessory section for details

| | |
|---|---|
| Potentiometers | RP-201 thru RP-210 |
| Reference dial | RP-216 |
| Locking attachment | RP-217 |

MODEL 1217
BASE MOUNT

INDUSTRIAL SOLID STATE
MOTION DETECTOR

ISSC
KANSON ELECTRONICS, INC.





## MOTION DETECTOR
## PLC WATCHDOG TIMER

The 1217 combines the control features of an underspeed motion detector and a noncontact solid state proximity sensor. It can also be used without the proximity sensor as a PLC watchdog timer.

## OPERATION

The model 1217 consists of an underspeed control unit and a DC proximity sensor. The unit output relay energizes for a set time interval when it receives one control circuit pulse from the proximity sensor. A pulse consists of one opening and closing of the control circuit. Each pulse resets the time interval to zero, and the output remains energized as long as the monitored motion provides at least two pulses per set time interval. The DC proximity sensor actuates the control circuit.

The time interval is set on the unit's internal timing potentiometer. The unit output relay immediately energizes and remains energized for the set time interval when a metal object leaves the sensing field.

1) The output relay de-energizes after the set time interval completes if a metal object remains out of the sensing field.

2) The output relay de-energizes after the set time interval completes if the metal object enters and remains in the sensing field.

3) The output relay remains energized and the time interval resets to zero and begins timing again if a metal object enters and leaves the sensing field before the set time interval completes.

4) The control unit automatically completes one time interval if a metal object is not present in the sensing field when power is initially applied.

When used as a PLC watchdog the PLC provides the input pulses, application information is included on page 28.

## SPECIFICATIONS 1217C

**INPUT**

**VOLTAGE:** 120VAC or 24VAC/DC
**FREQUENCY:** 50/60 Hz
**TOLERANCE (VOLTAGE):** ± 10% of nominal
**POWER CONSUMPTION:** 10VA maximum
**TRANSIENT PROTECTION:** Transformer(120V)
MOV(24V)

**OUTPUT**

**TYPE:** Electromechanical relay
**MECHANICAL LIFE:** 10,000,000 operations
**ELECTRICAL LIFE:** 500,000 operations
**RATING:** 10A - 1/6 HP at 120VAC, 1/3 HP at 240VAC

**FUNCTION**

**TYPE:** Underspeed motion detector/PLC watchdog
**TIMING RAMP:** 0.06 sec to minimum - 10K ohm/sec
0.5 sec minimum - 100K ohm/sec
**TIME RANGES:** 0.06 to 100 secs in 7 ranges
**RANGE TOLERANCE:** ≤ 10%at max, ≤0% at min
**CONTROL:** Isolated contact closure (max. resist. 100 Ω)
or DC proximity switch (ISSC 1217P)
**CONTROL TERMINALS:** D-E-F
**VOLTAGE PRESENT AT CONTROL TERMINALS:**
24VDC minimum, 40VDC maximum
**CYCLE TIME:** Minimum time control circuit closed 2ms
Minimum time control circuit open 50ms
Maximum control circuit pulses/sec 18
**SENSING DISTANCE:** 0.5 inch

**PHYSICAL**

**OPERATING TEMP:** 0° to 50°C (32° -120°F)
**TIMER VARIATION VS. TEMPERATURE:** ±5% max.
**MOUNTING:** base mount
**TERMINATION:** Terminal block on face of timer
**HOUSING:** Metal

## SPECIFICATIONS 1217P

**FEATURES**

**VOLTAGE RANGE:** 10-40VDC
**MAXIMUM SWITCHING FREQUENCY:** 150 pulses/sec
**OUTPUT RATING:** 100 mA
**SENSING DISTANCE:** 0.5 inch (12.7mm)
**RESIDUAL VOLTAGE:** ≤0.7V
**SWITCHING MODE:** Source/PNP
**OUTPUT STATE:** N.C.
**INDICATOR:** LED
**OPERATING TEMP:** -25° to 75°C (-13° to 167°F)

Courtesy of Steven Engineering, Inc. • 230 Ryan Way, South San Francisco, CA, 94080-6370 • Main Office: (650) 588-9200 • Outside Local Area: (800) 258-9200 • www.stevenengineering.com

Courtesy of Steven Engineering, Inc. • 230 Ryan Way, South San Francisco, CA, 94080-6370 • Main Office: (650) 588-9200 • Outside Local Area: (800) 258-9200 • www.stevenengineering.com

## ORDERING DATA - COMPLETE UNIT
### INCLUDES CONTROL AND PROX SWITCH

**ORDERING CODE** **1217 - 1 - G - B - 1**

**BASIC MODEL NUMBER**
1217

**INPUT VOLTAGE**
1 120VAC
2 24VAC/DC

**TIME RANGE** in seconds

| | | | |
|---|---|---|---|
| D | 0.06-1.0 | H | 0.06-25.0 |
| E | 0.06-2.5 | J | 0.06-50.0 |
| F | 0.06-5.0 | K | 0 .06-100 |
| G | 0.06-10.0 | | |

**OUTPUT**
B Relay 1 N.O., 1 N.C.
B1 Relay 2 N.O.
B2 Relay 2 N.C.

**LOCATION OF SENSING AREA**
1 End
2 Right
3 Left

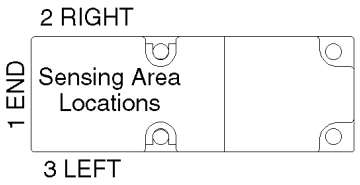


## ORDERING DATA - CONTROL ONLY

**ORDERING CODE** **1217C - 1 - G - B**

**BASIC MODEL NUMBER**
1217C

**INPUT VOLTAGE**
1 120VAC
2 24VAC/DC

**TIME RANGE** in seconds

| | | | |
|---|---|---|---|
| D | 0.06-1.0 | H | 0.06-25.0 |
| E | 0.06-2.5 | J | 0.06-50.0 |
| F | 0.06-5.0 | K | 0 .06-100 |
| G | 0.06-10.0 | | |

**OUTPUT**
B Relay 1 N.O., 1 N.C.
B1 Relay 2 N.O.
B2 Relay 2 N.C.

## ORDERING DATA - PROX SWITCH ONLY

**ORDERING CODE** **1217P - 1**

**BASIC MODEL NUMBER**
1217P

**LOCATION OF SENSING AREA**
1 End
2 Right
3 Left

## DIMENSIONS inches(millimeters)

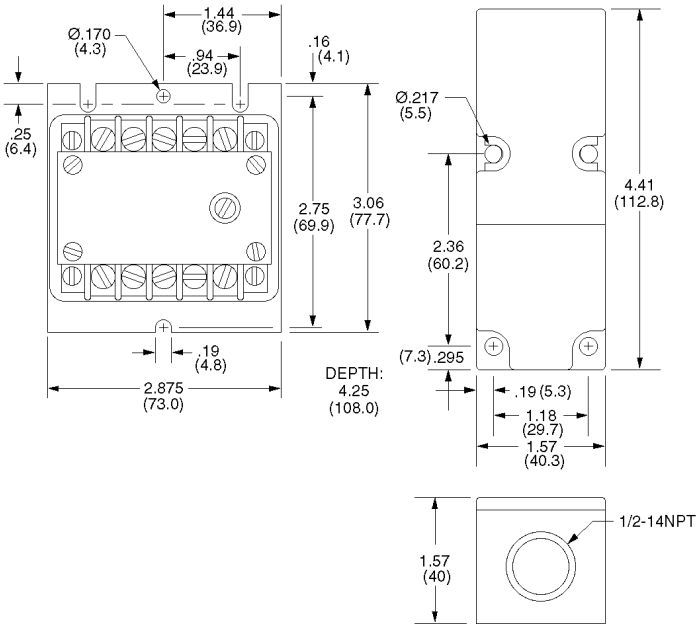


**INSTALLATION RECOMMENDATION:** The standard unit is insensitive to most induced voltage transients on the control leads (E-F). Although not mandatory, shielding the leads is recommended. Reasonable care should be taken to eliminate control lead runs in conduit or trays with high voltage lines(1000V or greater).

## WIRING

### Motion Detector

| | |
|---|---|
| A-B | Voltage input(constant) |
| C | Not used |
| D | DC(-) to terminal - on prox sensor |
| E | Control to Terminal A on prox sensor |
| F | DC(+) to terminal + on prox sensor |
| 1-2 | N.O. timed(except B2, N.C.) |
| 3-4 | N.C. timed(except B1, N.O.) |

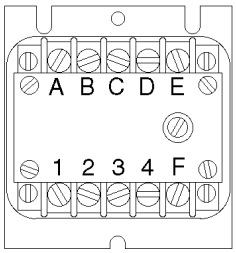


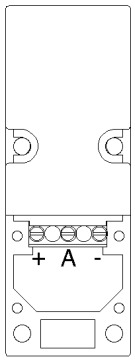


### PLC watchdog timer

| | |
|---|---|
| A-B | Voltage input(constant) |
| C | Not used |
| D | common on PLC |
| E | +24V pulsed output from PLC |
| F | not used |
| 1-2 | N.O. timed(except B2, N.C.) |
| 3-4 | N.C. timed(except B1, N.O.) |

# MODEL 1248A
LIMIT STYLE

# INDUSTRIAL SOLID STATE
# MOTION DETECTOR

ISSC
KANSON ELECTRONICS, INC.



## Self-contained
## Prox sensor and motion detector

**The 1248A** is a self-contained combination proximity sensor and speed switch (motion detector) in easy to install limit style unit. Two-wire circuit is wired in same manner as a limit switch. A plug-in receptacle saves wiring time. There are three user selectable speed ranges that cover 5 through 7500 pulses per minute and an adjustable start time delay of 0 to 20 seconds. An LED indicates that the output is energized and a target adjustment mode aids setup.

## ORDERING DATA

**ORDERING CODE** **1248A – 1A4P**

## OPERATION

- Output de-energized when monitored motion is below speed set point
- Output energizes when monitored motion reaches or exceeds speed set point
- Energized output will not de-energize until monitored motion drops below speed set point
- Output automatically resets-energizes when monitored speed again reaches speed set point

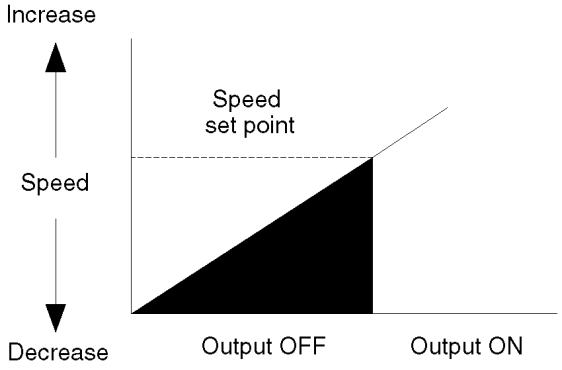


## SPECIFICATIONS

**INPUT**

**VOLTAGE:** 20 to 250 VAC/DC
**FREQUENCY:** 50/60 Hz or DC
**LEAKAGE:** ≤ 2mA
**TRANSIENT PROTECTION:** MOV

**OUTPUT**

**MAX. LOAD CURRENT:** 500 mA (continuous)
**VOLTAGE:** ≤ 9 Volts
(with resistive load max. load current)
**MAX. INRUSH CURRENT:** 7 A
**MIN. LOAD CURRENT:** 5 mA

**SENSING**

**SENSING DISTANCE:** 12.7mm (0.5 in)
**TARGET SIZE:** 40mm x 40mm mild steel

**TIMING**

**SPEED RANGES:** 3 (user selectable)
A = 5 - 75 ppm*
B = 50 - 750 ppm
C = 500 - 7500 ppm
**MAX. SPEED at which sensor can detect target:** 10,000 ppm
**HYSTERESIS:** 10% differential between pickup & dropout speeds.
**RESPONSE TIME:** All speed ranges 3 msec / 3 msec
(target present / target absent)
**DELAY IN READINES:** 100 msec
(with start up delay at zero)
**START UP TIME DELAY:** 0 - 20 seconds.
(user adjustable)

*ppm = speed (RPM) X number of targets

**PHYSICAL**

**TEMPERATURE RANGE:** -25˚C to +70˚C
**HOUSING MATERIAL:** Fire-retardant
ABS/polycabonate blend
**ENVIRONMENTAL RATING:** NEMA 1,3,4,6,12,13,IP67
**TERMINATION:** 3-Pin mini-style connector

**ACCESSORIES**
2 m cable with connector RP-503
5 m cable with connector RP-503-5

## WIRING

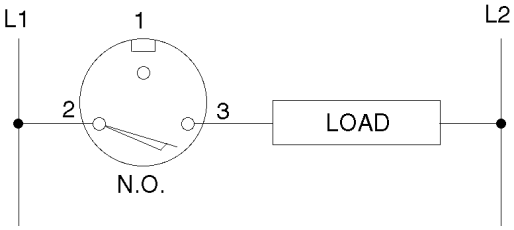


## DIMENSIONS millimeters

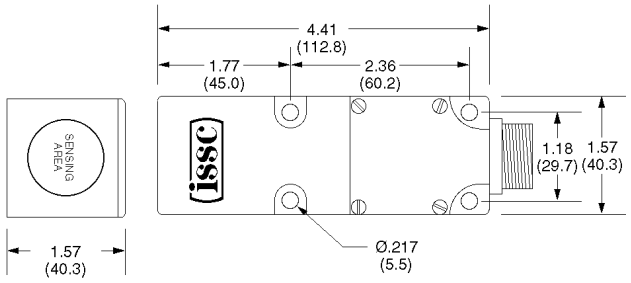


Courtesy of Steven Engineering, Inc. • 230 Ryan Way, South San Francisco, CA, 94080-6370 • Main Office: (650) 588-9200 • Outside Local Area: (800) 258-9200 • www.stevenengineering.com

Courtesy of Steven Engineering, Inc. • 230 Ryan Way, South San Francisco, CA, 94080-6370 • Main Office: (650) 588-9200 • Outside Local Area: (800) 258-9200 • www.stevenengineering.com

## ADJUSTMENTS

**Initial Start Time Delay** (0-20 Sec., Adjustable)
The 1248A is supplied with an initial start time delay which energizes the output for the time specified when power is applied to the unit. This feature provides time at start-up for the monitored equipment to reach a speed that will maintain an energized output. The output de-energizes if the speed of the monitored equipment fails to reach the set point by the end of this delay. Removing and reapplying power resets the initial time delay.

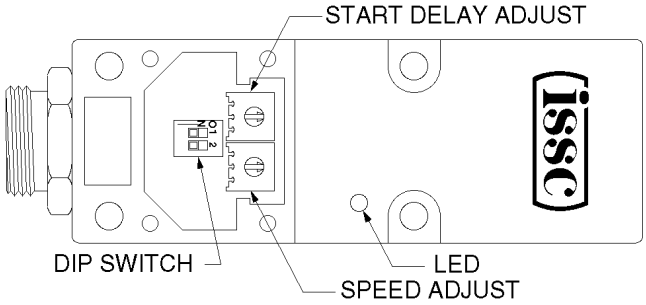


**DIP switch range selection**
The DIP switch selects one of the three ranges or test mode. The switches can be changed without removing power from the device. When the test mode is selected, the 1248A emulates a standard prox switch. The output comes on when the target is present. If power is applied with the switches set for test mode the 1248A enters a factory test mode. Turn off power and set switches to off to exit.

| RANGE | SPEED ppm | SWITCH 1 | SWITCH 2 |
|---|---|---|---|
| A | 5-75 | OFF | OFF |
| B | 50-750 | ON | OFF |
| C | 500-7500 | OFF | ON |
| TEST | - | ON | ON |

## APPLICATION EXAMPLE

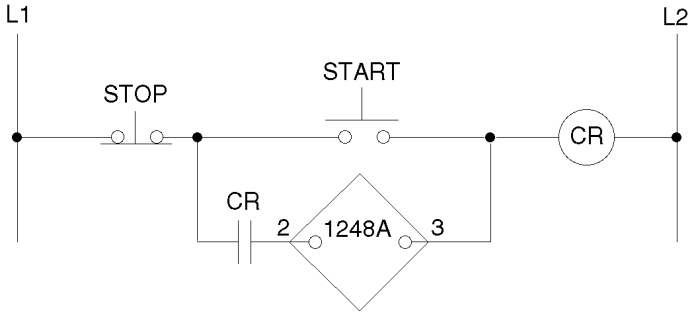


NOTE: This circuit requires the start time delay to be adjusted for no less than 1/2 sec.

## SPECIAL CONSIDERATIONS FOR PLC APPLICATIONS

When using the model 1248A as a direct input to a PLC, the minimum load current specification of 5mA must be taken into consideration. Most of todays PLC's have a very high input impedance which does not allow enough current for the 1248A to operate properly.

The solution to this problem is to parallel a load (a resistor or indicator lamp) with the PLC input.

Typical PLC Application Example:

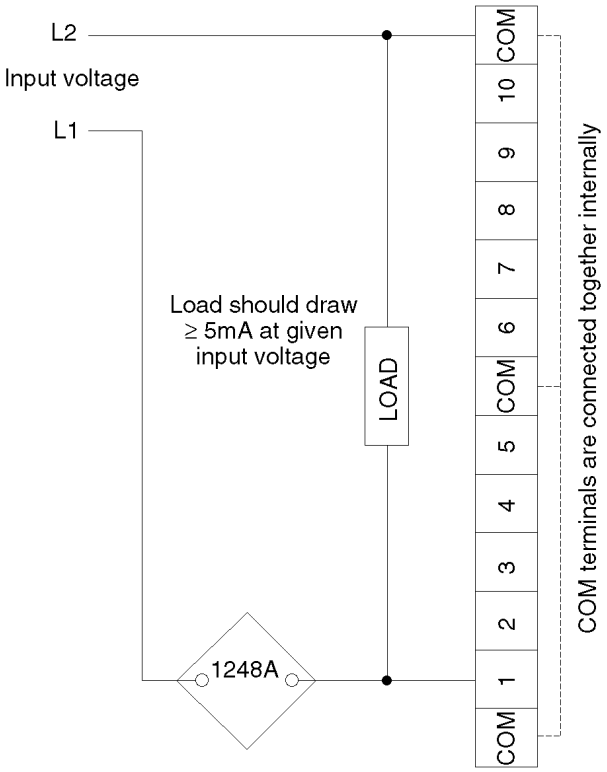


See your PLC User's Manual for specific wiring details.

# MODEL 1260 BASE MOUNT

# INDUSTRIAL SOLID STATE MOTION DETECTOR

ISSC
KANSON ELECTRONICS, INC.




## Underspeed Detection

**AC Control Circuit** is compatible with standard mechanical switches, solid state proximity sensors, and 120 VAC pulses.

## OPERATION

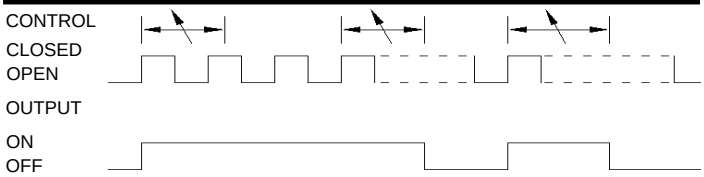


Closing the control circuit energizes the output.
Opening and reclosing the control circuit before the set time interval completes keeps the output energized, and it remains energized as long as the monitored motion continues to provide at least two pulses per set time interval.
If the monitored motion stops, the output de-energizes after the set time interval completes, even if motion stops in such a way that the control circuit remains closed.

## ORDERING DATA

**ORDERING CODE** **1260 - 1 - K - C**

**BASIC MODEL NUMBER**
1260

**INPUT VOLTAGE**
1 120VAC

**TIME RANGE** (Secs)

| | | | | | |
|---|---|---|---|---|---|
| A | 0.06-0.10 | F | 0.06-5.0 | L | 0.5-250 |
| B | 0.06-0.25 | G | 0.06-10.0 | M | 0.5-500 |
| C | 0.06-0.50 | H | 0.06-25.0 | W | Fixed time |
| D | 0.06-1.0 | J | 0.5-50.0 | | (see note) |
| E | 0.06-2.5 | K | 0.5-100 | | |

**NOTE:** Specify W and desired fixed time. Factory will set time within 5%

**OUTPUT**
B Relay 1 N.O., 1 N.C.
C Solid State 1 N.O., 1.5 amps AC

**APPLICABLE ACCESSORIES**
See accessory section for details

| | |
|---|---|
| Potentiometers | RP-201 thru RP-210 |
| Reference dial | RP-216 |
| Locking attachment | RP-217 |

## SPECIFICATIONS

**INPUT**
**VOLTAGE:** 120VAC
**FREQUENCY:** 50/60 Hz
**TOLERANCE (VOLTAGE):** ± 10% of nominal
**POWER CONSUMPTION:** 10 VA maximum
**TRANSIENT PROTECTION:** Isolation transformer

**OUTPUT**
**TYPE:** Electromechanical relay or solid state
**RATING:** 1.5A @ 120 VAC (solid state)
10A @ 240VAC maximum (electromechanical)

**FUNCTION**
**TYPE:** Motion detector
**REPEAT ACCURACY:** ± 1/2 % of setting
**INDICATION:** LED indicates unit timing and output energized
**TIMING RAMP:** 0.06 sec minimum time - 100kΩ/sec
0.5 sec minimum time - 10kΩ/sec
**TIME RANGE:** 0.06 to 500 secs in 12 ranges
**RANGE TOLERANCE:** ≤ 10% at maximum,
≤ 0% at minimum
**CONTROL:** Isolated contact closure or AC prox switch
**CONTROL TERMINALS:** P1-P2-L2
**VOLTAGE PRESENT AT CONTROL TERMINALS:**
P1-P2: Same as input voltage
L2-P2: 120VAC pulse
**CYCLE TIME:** Min. time control circuit closed 8 msec
Min. time control circuit open 16 msec
Max. control circuit pulses/sec 40

**PHYSICAL**
**OPERATING TEMP:** -32° to 71° C (-25° to 160°F)
**TIMING VARIATION VS. TEMP:** ± 3% maximum
**MOUNTING:** Base mount
**TERMINATION:** Terminal block on face of timer
**HOUSING:** Metal

## WIRING

**OUTPUT B**
L1-L2 Voltage input (constant)
P1-P2 Control
L2-P2 120VAC Pulse
Output as shown: N.O. timed
N.C. timed
***Caution:*** Never apply voltage to P1
(L1 internally jumpered to P1)

**OUTPUT C**
L1-L2 Voltage input (constant)
P1-P2 Control
L2-P2 120VAC Pulse
R1-R2 Remote adjust (jumper if not used)
S1-S2 N.O. solid state, timed
***Caution:*** Never apply voltage to P1-R1-R2
(L1 internally jumpered to P1)

Wiring Terminal Location

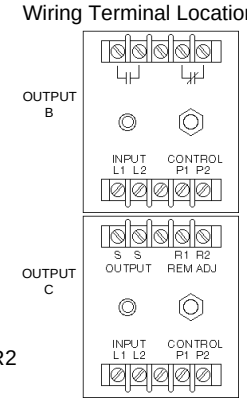


## DIMENSIONS Inches (millimeters)

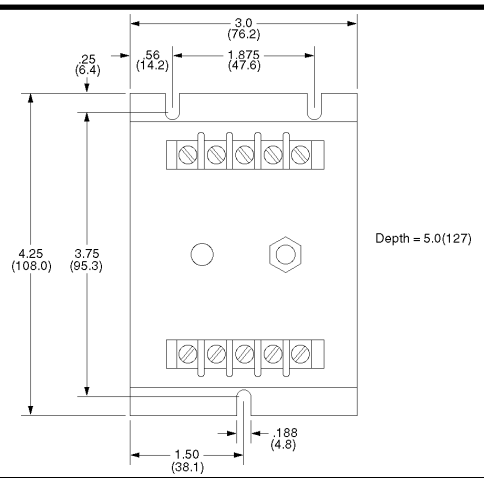


Courtesy of Steven Engineering, Inc. • 230 Ryan Way, South San Francisco, CA, 94080-6370 • Main Office: (650) 588-9200 • Outside Local Area: (800) 258-9200 • www.stevenengineering.com

Courtesy of Steven Engineering, Inc. • 230 Ryan Way, South San Francisco, CA, 94080-6370 • Main Office: (650) 588-9200 • Outside Local Area: (800) 258-9200 • www.stevenengineering.com

**Adjusting Set Time Interval**

A timing potentiometer sets the time interval. It is necessary to calculate the period of time between pulses to determine the correct time setting.

1) Determine minimum operating speed. This is the speed at which the output energizes. Any greater speed also maintains an energized output. Any slower speed de-energizes the output.

2) Determine pulse/sec ratio provided by minimum operating speed.

example: 2 pulses/sec

3) Determine time interval between pulses.

example: 2 pulses/sec = 1 pulse/0.5 sec

4) Adjust timing potentiometer to a setting slightly greater than 0.5 sec. Minimum operating speed (1 pulse/0.5 sec) will provide 2 pulses in a time interval slightly greater than 0.5 sec and maintain an energized output. Any speed less than the minimum operating speed will not provide two pulses per set time interval, and the unit's output will de-energize.

5) Select a time range, when ordering a 1262, in which the set time interval for minimum operating speed falls midrange. This provides better time setting resolution.

example: Set time interval - 0.55 sec
Select time range "D" - 0.06-1.0 sec)

## SPECIFICATIONS

**INPUT**

**VOLTAGE:** 120VAC
**FREQUENCY:** 50/60 Hz
**TOLERANCE (VOLTAGE):** ± 10% of nominal
**POWER CONSUMPTION:** 10 VA maximum
**TRANSIENT PROTECTION:** Isolation transformer

**OUTPUT**

**TYPE:** Electromechanical relay
**RATING:** 10A - 1/6 HP at 120VAC, 1/3 HP at 240VAC

**FUNCTION**

**TYPE:** Motion detector
**REPEAT ACCURACY:** ± 1% of setting
**INDICATION:** LED indicates unit timing and output energized
**TIMING RAMP:** 0.02 sec minimum time - 1MΩ/sec
0.06 sec minimum time - 100KΩ/sec
0.5 sec minimum time - 10KΩ/sec
**TIME RANGE:** 0.02 to 1000 secs in 13 ranges
**RESPONSE TIME:** Set time interval
**HYSTERISIS:** ~5% between pick-up and drop-out speeds
**RANGE TOLERANCE:** ≤ 10% at max, ≤ 0% at min
**CONTROL TERMINALS:** A-B-C-D-E-F
**VOLTAGE PRESENT AT CONTROL TERMINALS:**
A - C : Same as input voltage
B - C : 120VAC pulse
D - E - F : 12VDC
D - E : 12VDC pulse

**CYCLE TIME:**

| Time Range | | AC Control | DC Control |
|---|---|---|---|
| A-C | Minimum time control circuit closed | 8 msec | 0.1 msec |
| | Minimum time control circuit open | 16 msec | 0.45 msec |
| | Maximum control circuit pulses/sec | 40 | 1800 |
| D-H | Minimum time control circuit closed | 8 msec | 0.1 msec |
| | Minimum time control circuit open | 16 msec | 5 msec |
| | Maximum control circuit pulses/sec | 40 | 200 |
| J-N | Minimum time control circuit closed | 8 msec | 8 msec |
| | Minimum time control circuit open | 42 msec | 42 msec |
| | Maximum control circuit pulses/sec | 20 | 20 |

**PHYSICAL**

**OPERATING TEMP:** 0° to 50° C (32° to 122°F)
**TIMING VARIATION VS. TEMP:** ± 5% maximum
**MOUNTING:** Base mount
**TERMINATION:** Terminal block on face of timer
**HOUSING:** Metal




## Underspeed or Overspeed Detection

**Output Energizes** only when running speed is reached.

**AC Control Circuit** is compatible with standard mechanical switches, solid state proximity sensors, and 120VAC pulse.

**DC Control Circuit** is compatible with solid state source or sink proximity sensors.

**MSHA** Investigation No. IA-137. The 1262 used in conjunction with the ISSC 1221 proximity sensor (see page 40) is approved by the Mine Safety and Health Administration.

CSA File No. LR92815

## OPERATION

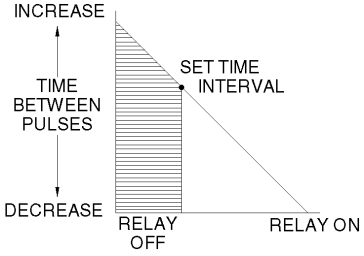


The output is de-energized when the monitored motion provides less than two pulses per set time interval. The output energizes when the monitored motion reaches or exceeds two pulses per set time interval. Once energized, the output will not de-energize until the monitored motion drops to less than two pulses per set time interval. The output automatically resets and the output energizes, when the monitored speed again matches two pulses per set time interval.

**Initial Start Time Delay**

The 1262 can be supplied with an initial start time delay which energizes the output for the time specified when the power is applied to the unit. This feature provides time at start up for the monitored equipment to reach a speed that will maintain an energized output. The output will de-energize, if the speed of the monitored equipment fails to reach the set point by the end of this delay. Removing and reapplying power resets the initial time delay.

# MODEL 1262 INDUSTRIAL SOLID STATE
BASE MOUNT **MOTION DETECTOR**

ISSC
KANSON ELECTRONICS, INC.

## ORDERING DATA

**ORDERING CODE** **1262 - 1 - L - D - B - OP3(10)**

**BASIC MODEL NUMBER**
1262

**INPUT VOLTAGE**
1 120VAC

**DETECTION MODE**
L Underspeed

**TIME RANGE** (Secs)

| | | | | | |
|---|---|---|---|---|---|
| A | 0.02-0.10 | F | 0.06-5.0 | L | 0.5-250 |
| B | 0.02-0.25 | G | 0.06-10.0 | M | 0.5-500 |
| C | 0.02-0.50 | H | 0.06-25.0 | N | 0.5-1000 |
| D | 0.06-1.0 | J | 0.5-50.0 | W | Fixed time |
| E | 0.06-2.5 | K | 0.5-100 | | (see note) |

**NOTE:** Specify W and desired fixed time. Factory will set time within 5%

**OUTPUT**
B Relay 1 N.O., 1 N.C.
B1 Relay 2 N.O.
B2 Relay 2 N.C

**OPTION** (If desired)
OP3( t ) Initial start time delay. Specify in parentheses time selected from below.

| | |
|---|---|
| 1 sec | 10 secs |
| 5 secs | 25 secs |

**SPECIAL MODEL for PLC WATCHDOG applications**
ORDER NUMBER **1262-PC**
0.06-2.5 second timeout
2 second start-up delay
Relay ouput 1 N.O., 1 N.C.

**APPLICABLE ACCESSORIES**
See accessory section for details
Locking attachment RP-217

## DIMENSIONS Inches (millimeters)

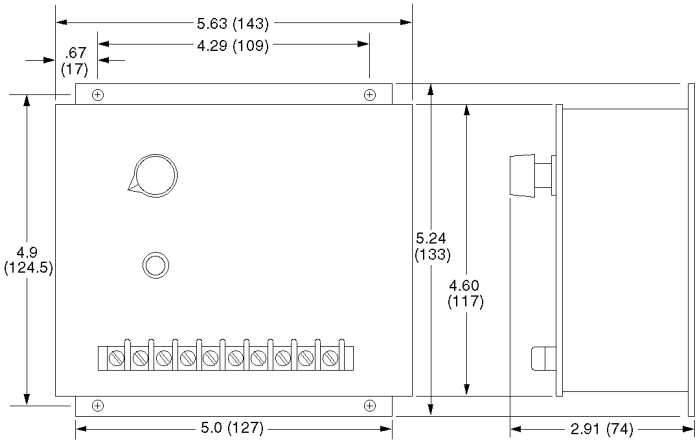


## WIRING

A-B Voltage input (constant)
A-C AC Control — mechanical contact or prox sensor
B-C AC Control — 120VAC Pulse
D-E-F DC Control — source or sink* prox sensor
D- (DC-) common for prox sensor
E- (A) input for prox sensor
F- (+ 12VDC) supplied to prox sensor
D-E 12VDC Pulse
D- (DC-) Common
E- (+12VDC) Supplied by sourcing output
E-F DC Control — mechanical contact
*When using sink prox sensor, install 1200 ohm pull-up resistor (supplied with unit) at E-F.
1-2 N.O. (except B2, N.C.)
3-4 N.C. (except B1, N.O.)

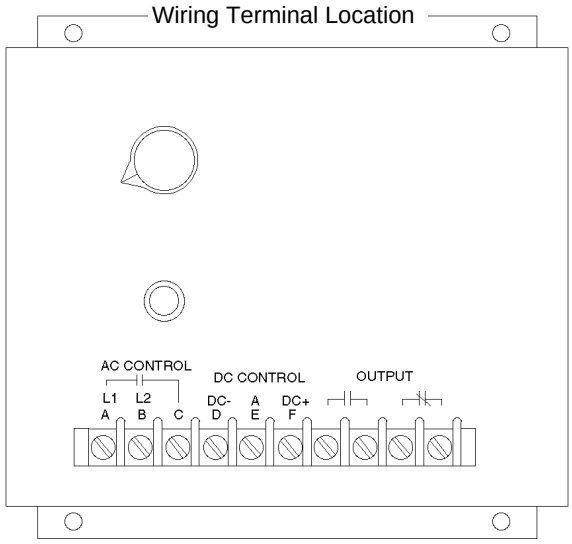


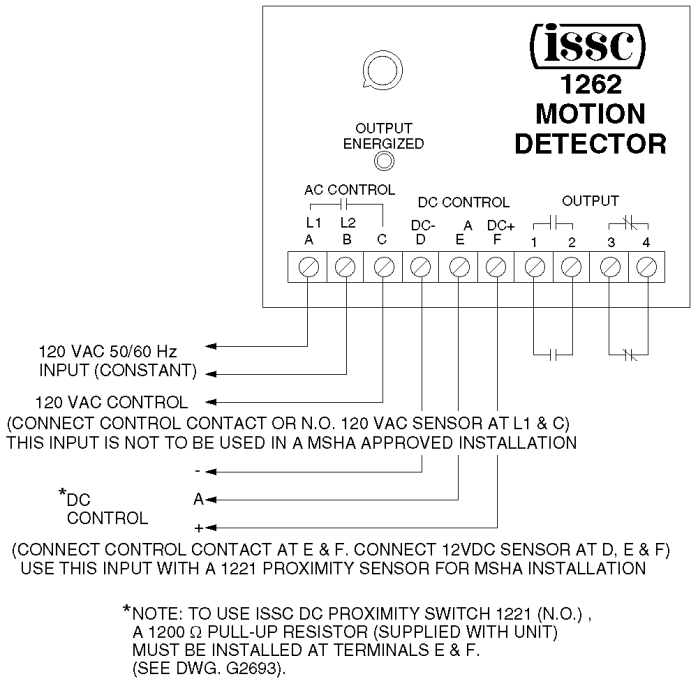


*NOTE: TO USE ISSC DC PROXIMITY SWITCH 1221 (N.O.) , A 1200 Ω PULL-UP RESISTOR (SUPPLIED WITH UNIT) MUST BE INSTALLED AT TERMINALS E & F. (SEE DWG. G2693).

Courtesy of Steven Engineering, Inc. • 230 Ryan Way, South San Francisco, CA, 94080-6370 • Main Office: (650) 588-9200 • Outside Local Area: (800) 258-9200 • www.stevenengineering.com

# MODEL 1110C

PANEL or PC BOARD/ MOUNT

# INDUSTRIAL SOLID STATE DIGITAL COUNTER

ISSC

KANSON ELECTRONICS, INC.

## SPECIFICATIONS

**INPUT POWER**

**BATTERY:** 6 year life
Easily replaced
Environmentally friendly
**BACKLIGHT:** Requires 24vdc (+/-10%)

**COUNTER INPUT**

**TYPE:** Non - Voltage
4.5 to 30 VDC
24 to 240VAC/DC
**SPEED:** 30/sec or 2000/sec

**COUNTING**

**MODE:** Addition (Counting up) with remote reset
**DISPLAY:** 8 digit LCD

**PHYSICAL**

**VIBRATION RESISTANCE:**
**Functional:** 10 to 55 Hz: 1 cycle/min single amplitude of 0.15 mm (10 min on 3 axes)
**Destructive:** 10 to 55 Hz: 1 cycle/min single amplitude of 0.375 mm (1 h on 3 axes)
**SHOCK RESISTANCE:**
**Functional:** Min. 98m/s² {10G} (4 times on 3 axes)
**Destructive:** 294m/s² {30G} (5 times on 3 axes)
**OPERATING TEMPERATURE:** -10° to 55° C (14° to 131°F)
**STORAGE TEMPERATURE:** -25° to 65° C (-13° to 145°F)
(Protect from moisture condensing or freezing at low temperatures)
**OPERATING HUMIDITY:** 35 TO 85% RH
**TERMINATION:** Screw terminals
**HOUSING:** Polycarbonate

## DIMENSIONS millimeters

### Flush mounting type

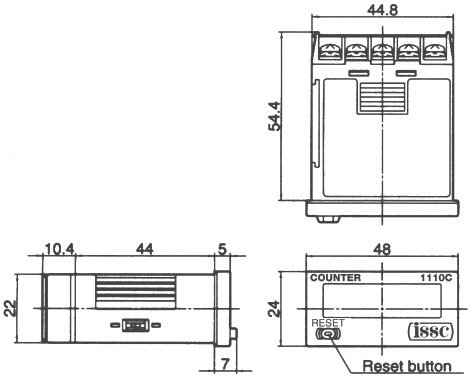


### PC board mounting type

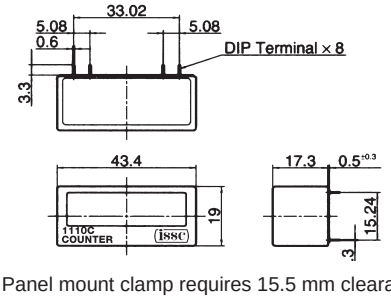


Panel mount clamp requires 15.5 mm clearance above and below counter behind panel.




## Digital Counter

**FEATURES:**

- Large, 8 digit LCD display
- 2kHz or 30Hz counter speeds
- Three Input methods
- Replacable long life battery
- Backlighted display available
  Switchable Red or Green
- PC Board mounting available

## ORDERING DATA

**ORDERING CODE** **1110C — 1 — P — 1 — N**

**BASIC MODEL NUMBER**
1110C

**INPUT SIGNAL**
1 Non-Voltage Input
2 24 to 240VAC/DC
3 4.5 to 30 VDC

**MOUNT**
F Flush Mounting Type
P PC Board Mounting Type

**COUNTING SPEED**
1 2kHz
2 30Hz
3 2kHz/30Hz Switchable

**BACKLIGHT**
B Backlight
N No light

**ACCESSORIES** See accessory section for details
Panel mount clamp RP-325(one included with 1110C)

**AVAILABILITY**
PC Mounting Type only available
with Non-Voltage Input
without switchable counting speed
without reset button
without backlight
Backlight option only available
with swithchable counting speed
with 4.5 to 30 VDC
24 to 240 VAC/DC only available with 30Hz counter speed

800-233-9354 or 931-796-3050 Fax 931-796-3956 web http://www.issc-kanson.com/

# MODEL 1120H
DC TYPE HOUR METER

# INDUSTRIAL SOLID STATE CONTROLS

ISSC
KANSON ELECTRONICS, INC.




## Hour Meter

## SPECIFICATIONS

**INPUT POWER**

**VOLTAGE:** 12 or 24 VDC
**VOLTAGE RANGES:** 10.2 < 12 < 15.6 VDC
20.4 < 24 < 31.2 VDC
**POWER CONSUMPTION:** 1.5 W at 25° C

**TIME**

**RANGE:** 0.0 to 9999.9 Hours
**MINIMUM DISPLAY:** 6 Minutes

**PHYSICAL**

**VIBRATION RESISTANCE:**
10 to 55 Hz: 1 cycle/min double amplitude
of 0.5 mm (10 min on 3 axes)
**SHOCK RESISTANCE:**
**Functional:** Min. 98m/s² (4 times on 3 axes)
**Destructive:** 980m/s² (4 times on 3 axes)
**OPERATING TEMPERATURE:** -20° to 60° C (-4° to 140°F)
**OPERATING HUMIDITY:** 45 TO 85% RH
**TERMINATION:** Screw terminals
**CONSTRUCTION:** IP66 Compliant at panel face

## FEATURES:

- Ideal for scheduling maintenance on a variety of equipment
- DC powered
- Suitable for harsh environments IP66 Compliant
- High performance compact sync motor
- Ultra-accurate quartz ocillator

## ORDERING DATA

**ORDERING CODE** **1120H — 1**

**BASIC MODEL NUMBER**
1120H
**INPUT VOLTAGE**
1 12 VDC
2 24 VDC

## DIMENSIONS millimeters

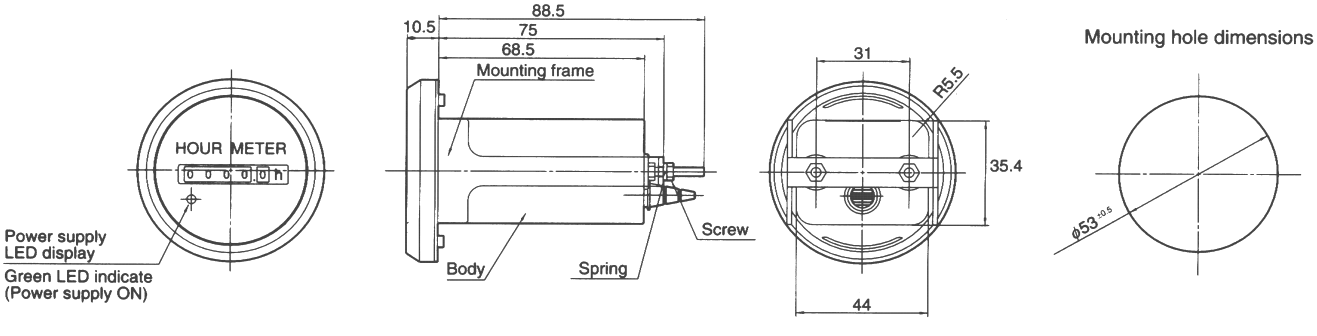




800-233-9354 or 931-796-3050 Fax 931-796-3956 web http://www.issc-kanson.com/

Courtesy of Steven Engineering, Inc. • 230 Ryan Way, South San Francisco, CA, 94080-6370 • Main Office: (650) 588-9200 • Outside Local Area: (800) 258-9200 • www.stevenengineering.com

# MODEL 1221
LIMIT STYLE

# INDUSTRIAL SOLID STATE PROXIMITY SWITCH

KANSON ELECTRONICS, INC.



## DC Limit Style

## FEATURES

**The 1221** is a low cost limit style DC, three wire, proximity switch. When used with the 1262 provides a MSHA approved motion sensing system.

## ORDERING DATA

**ORDERING CODE** **1221 - 1 - A - 1 - A**

The 1221 is currently only available as an end sensing, NPN sinking, normally open output, 10- 26 VDC unit**.**

## SPECIFICATIONS

**INPUT**

**VOLTAGE:** 10 to 26 VDC,10% ripple allowed
**SUPPLY CURRENT:** ≤ 20 mA
**TRANSIENT PROTECTION:** MOV

**OUTPUT**

**MAX. LOAD CURRENT:** 100 mA (continuous)

**SENSING**

**SENSING DISTANCE:** 14.29 mm (0.56 in)
**REPEATABILITY:** ±5 mm (0.02 in)
**HYSTERESIS:** 3.18 mm (0.12 in)
**TARGET SIZE:** 40mm x 40mm x 1mm mild steel
**SWITCHING FREQUENCY:** 1.0 kHz maximum
**RANGE DERATING:**

| | |
|---|---|
| Chrome-nickel | 0.9 |
| Brass | 0.5 |
| Aluminum | 0.45 |
| Copper | 0.4 |

**PHYSICAL**

**OPERATING TEMP:** -20˚C to +65˚C(-4°F to +149°F)
**HOUSING MATERIAL:** Fire-retardant ABS/polycarbonate blend
**ENVIRONMENTAL RATING:** NEMA 1,3,4,6,12,13,IP67
**TERMINATION:** Internal terminal block

## WIRING

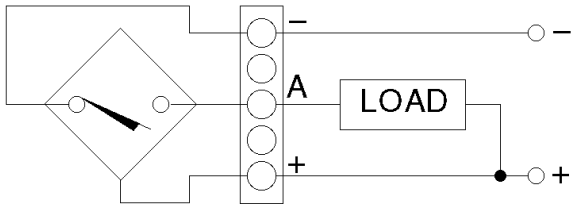


WIRING TO INTERNAL TERMINAL STRIP

## DIMENSIONS inches(millimeters)

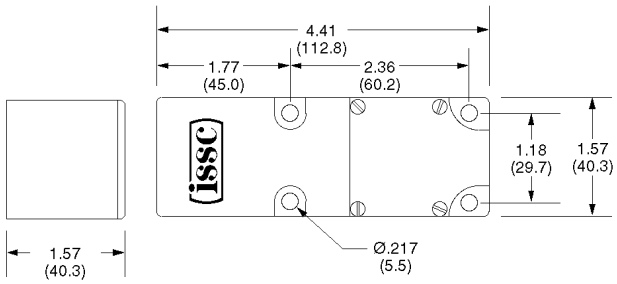

Courtesy of Steven Engineering, Inc. • 230 Ryan Way, South San Francisco, CA, 94080-6370 • Main Office: (650) 588-9200 • Outside Local Area: (800) 258-9200 • www.stevenengineering.com



# INDUSTRIAL SOLID STATE PROXIMITY SWITCH

# MODEL 1250 LIMIT STYLE

## SPECIFICATIONS

**INPUT**

**VOLTAGE:** 20 to 250 VAC/DC
**FREQUENCY:** 50/60 Hz or DC
**LEAKAGE:** ≤ 2mA
**TRANSIENT PROTECTION:** MOV

**OUTPUT**

**MAX. LOAD CURRENT:** 500 mA (continuous)
**VOLTAGE:** ≤ 9 Volts
(with resistive load max. load current)
**MAX. INRUSH CURRENT:** 7 A
**MIN. LOAD CURRENT:** 5 mA

**SENSING**

**SENSING DISTANCE:** 12.7mm (0.5 in)
**TARGET SIZE:** 40mm x 40mm mild steel
**SWITCHING FREQUENCY:** 166 Hz maximum

**PHYSICAL**

**TEMPERATURE RANGE:** -25˚C to +70˚C
**HOUSING MATERIAL:** Fire-retardant ABS/polycabonate blend
**ENVIRONMENTAL RATING:** NEMA 1,3,4,6,12,13,IP67
**TERMINATION:** Internal terminal block or external 3-Pin mini-style connector

## WIRING

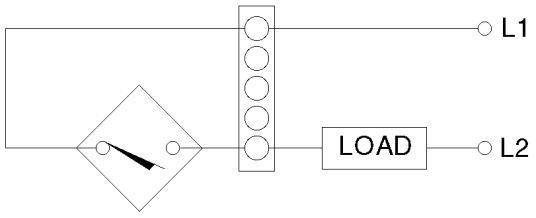


WIRING FOR INTERNAL TERMINAL STRIP

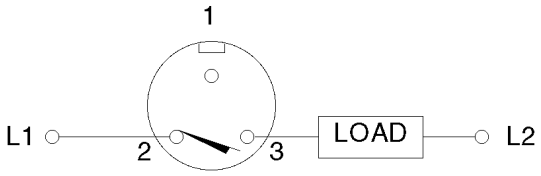


WIRING WITH EXTERNAL CONNECTOR

## DIMENSIONS inches(millimeters)

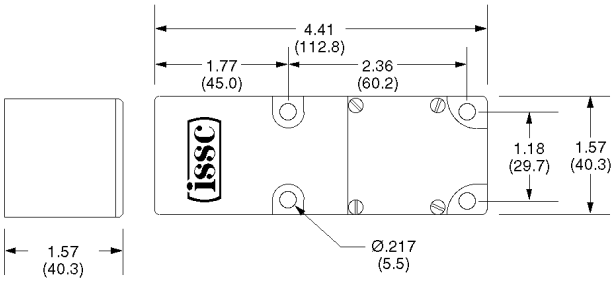




**AC Limit Style**

## FEATURES

The 1250 is a low cost limit style proximity switch using the same proven detection circuitry as our 1248A. Featuring a 20-250 VAC/DC universal input volatge and a simple two-wire connection. It is available with end, left or right sensing. Other options are a normally open or normally closed output and either an internal terminal block or a factory installed connector.

## ORDERING DATA

**ORDERING CODE** **1250 - 1 - A - 1**

**BASIC MODEL NUMBER**
1250

**LOCATION OF SENSING AREA**
1 End
2 Right
3 Left

**OUTPUT CONFIGURATION**
A Normally open
B Normally closed

**TERMINATION**
1 Terminal block inside cover
2 Connector on end of housing

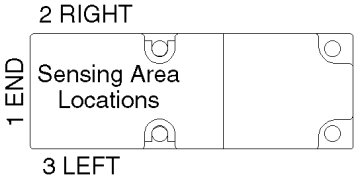

Courtesy of Steven Engineering, Inc. • 230 Ryan Way, South San Francisco, CA, 94080-6370 • Main Office: (650) 588-9200 • Outside Local Area: (800) 258-9200 • www.stevenengineering.com

# MODEL TMS-D CYLINDRICAL

# INDUSTRIAL SOLID STATE PROXIMITY SWITCH

ISSC
KANSON ELECTRONICS, INC.



## Magnet Activated

## FEATURES

**The TMS-D** is a compact, tubular magnet sens offers a high sensitivity to magnetic field and a high switching speed. Many types of magnets including electromagnets can be used for actuation. Sourcing and sinking options in both normally open and normally closed configurations are offered, reverse polarity protection is included on all models.

## ORDERING DATA

**ORDERING CODES**

| | |
|---|---|
| **TMS - D101** | N.C. NPN sinking output |
| **TMS - D102** | N.O. NPN sinking output |
| **TMS - D103** | N.C. PNP sourcing output |
| **TMS - D104** | N.O. PNP sourcing output |

## SPECIFICATIONS

**INPUT**

**VOLTAGE:** 9 to 26 VDC,10% ripple allowed
**SUPPLY CURRENT:** ≤ 20 mA @ 24VDC

**OUTPUT**

**MAX. LOAD CURRENT:** 100 mA (continuous)
**VOLTAGE DROP:** ≤ 2 VDC

**SENSING**

**SENSING DISTANCE:** up to 1 inch
**FIELD STRENGTH TO ACTUATE:** ≥ 30 Gauss
**SWITCHING FREQUENCY:** 50 kHz (resistive load)

**PHYSICAL**

**TEMPERATURE RANGE:** -40˚C to +85˚C
**HOUSING MATERIAL:** Diallyl Phthalate
**ENVIRONMENTAL RATING:** NEMA 1,3,4,4x,6,13,IP67
**TERMINATION:** 2m PVC insulated cable 3x24 AWG

## WIRING

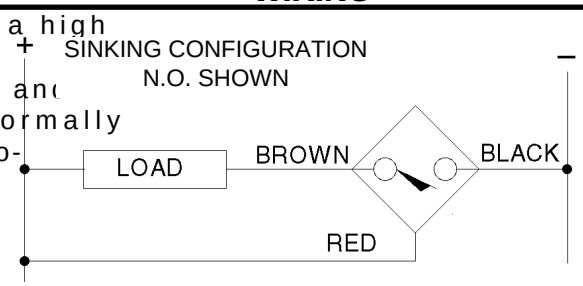


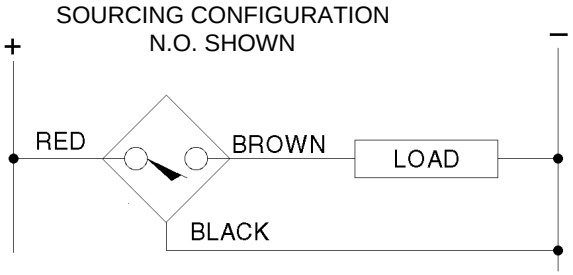


## DIMENSIONS inches(millimeters)

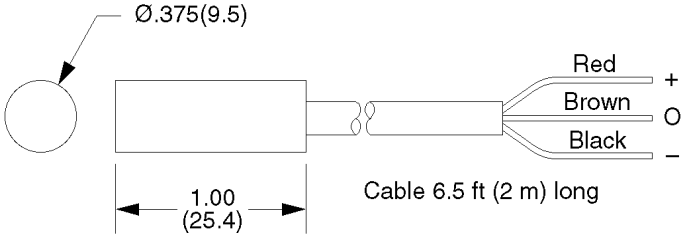

| Output Function | | |
|---|---|---|
| | NPN, NO | **T04-D310-F** |
| | PNP, NO | **T04-D410-F** |
| | NPN, NC | **T04-D510-F** |
| | PNP, NC | **T04-D610-F** |

**4 mm Diameter**
Unthreaded body with cable.

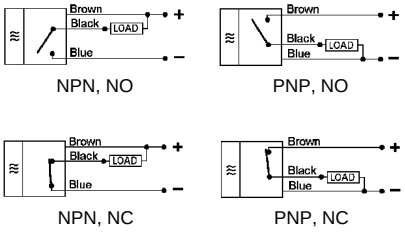


NPN, NO PNP, NO
NPN, NC PNP, NC

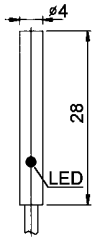


| | |
|---|---|
| Operating Distance | 0.8 mm |
| Power Supply | 10 - 30 VDC |
| Power Drain | < 5 mA |
| Voltage Drop (on state) | < 3 V |
| Switching Current (max) | 150 mA max. |
| Short Circuit Protection | No |
| Operating Frequency | 3 kHz max. |
| Repeatability | not specified |
| Case | Stainless Steel |
| Flush Mounting | Yes |
| Protection Degree | IP 67 |
| Operating Temperature | -25°C to +70°C |
| Output Connection | Cable: PVC, 22 AWG, 2 m long |

| Output Function | | | |
|---|---|---|---|
| | NPN, NO | **T05-D310-F** | **T05-D313-F** |
| | PNP, NO | **T05-D410-F** | **T05-D413-F** |
| | NPN, NC | | **T05-D513-F** |
| | PNP, NC | | **T05-D613-F** |

**5 mm Diameter**
Threaded body with cable or integral connector to simplify installation.

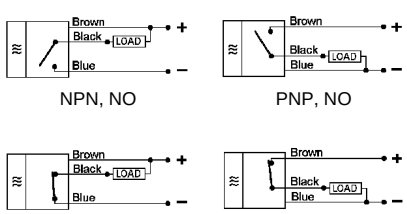


NPN, NO PNP, NO
NPN, NC PNP, NC

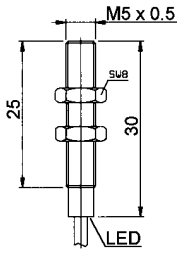


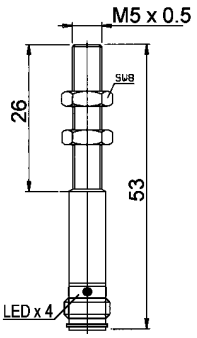


| | | |
|---|---|---|
| Operating Distance | 0.8 mm | |
| Power Supply | 10 - 30 VDC | |
| Power Drain | < 5 mA | |
| Voltage Drop (on state) | < 3 V | |
| Switching Current (max) | 150 mA max. | |
| Short Circuit Protection | No | |
| Operating Frequency | 3 kHz max. | |
| Repeatability | not specified | |
| Case | Stainless Steel | |
| Flush Mounting | Yes | |
| Protection Degree | IP 67 | |
| Operating Temperature | -25°C to +70°C | |
| Output Connection | Cable: PVC, 22 AWG, 2 m long | Connector |

Courtesy of Steven Engineering, Inc. • 230 Ryan Way, South San Francisco, CA, 94080-6370 • Main Office: (650) 588-9200 • Outside Local Area: (800) 258-9200 • www.stevenengineering.com

| Output Function | | | |
|---|---|---|---|
| | NPN, NO | **XT06-D310-F** | **XT05-D313-F** |
| | PNP, NO | **XT06-D410-F** | **XT05-D413-F** |
| | NPN, NC | **XT06-D510-F** | **XT05-D513-F** |
| | PNP, NC | **XT06-D610-F** | **XT05-D613-F** |

**6.5 mm Diameter**
**Extended Operating Distance**
Unthreaded body with cable or integral connector to simplify installation.

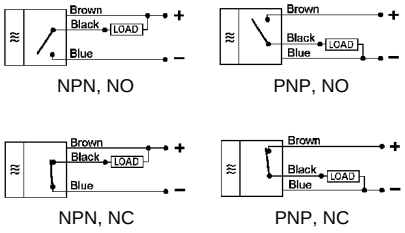


NPN, NO PNP, NO
NPN, NC PNP, NC

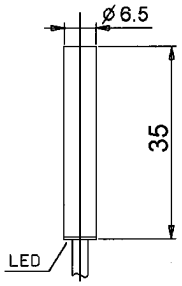


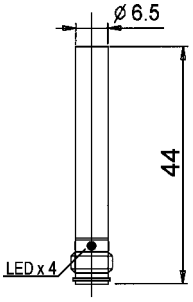


| | | |
|---|---|---|
| Operating Distance | 2.0 mm | |
| Power Supply | 10 - 30 VDC | |
| Power Drain | < 12 mA | |
| Voltage Drop (on state) | < 1.8 V | |
| Switching Current (max) | 200 mA max. | |
| Short Circuit Protection | Yes | |
| Operating Frequency | 2 kHz max. | |
| Repeatability | < 0.01 mm | |
| Case | Stainless Steel | |
| Flush Mounting | Yes | |
| Protection Degree | IP 67 | |
| Operating Temperature | -25°C to +70°C | |
| Output Connection | Cable: PVC, 22 AWG, 2 m long | Connector |

| Output Function | | | | | |
|---|---|---|---|---|---|
| | NPN, NO | **T08-D310-F** | **T08-D360-F** | **T08-D318-F** | **T08-D368-F** |
| | PNP, NO | **T08-D410-F** | **T08-D460-F** | **T08-D418-F** | **T08-D468-F** |
| | NPN, NC | | | **T08-D518-F** | **T08-D568-F** |
| | PNP, NC | | | **T08-D618-F** | **T08-D668-F** |

**8 mm Diameter**
Threaded body with cable or integral connector to simplify installation.

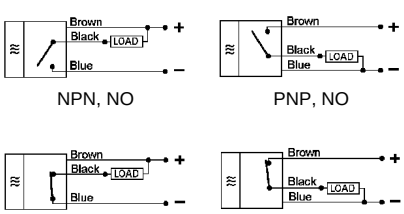


NPN, NO PNP, NO
NPN, NC PNP, NC

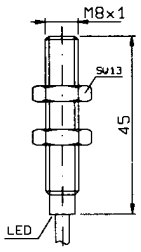


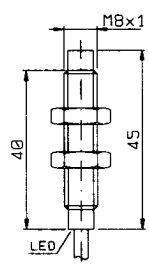


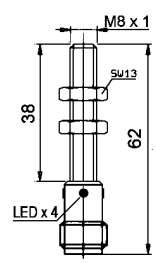


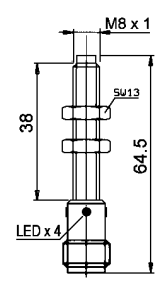


| | | | | |
|---|---|---|---|---|
| Operating Distance | 1.0 mm | 2.0 mm | 1.5 mm | 2.0 mm |
| Power Supply | 10 - 30 VDC | | | |
| Power Drain | < 5 mA | | < 15 mA | |
| Voltage Drop (on state) | < 1.8 V | | | |
| Switching Current (max) | 200 mA max. | | | |
| Short Circuit Protection | Yes | | | |
| Operating Frequency | 2 kHz max. | | | |
| Repeatability | not specified | | < 0.01 mm | |
| Case | Stainless Steel | | | |
| Flush Mounting | Yes | No | Yes | No |
| Protection Degree | IP 67 | | | |
| Operating Temperature | -25°C to +70°C | | | |
| Output Connection | Cable: PVC, 22 AWG, 2 m long | | Connector | |

Courtesy of Steven Engineering, Inc. • 230 Ryan Way, South San Francisco, CA, 94080-6370 • Main Office: (650) 588-9200 • Outside Local Area: (800) 258-9200 • www.stevenengineering.com

| Output Function | | | | | |
|---|---|---|---|---|---|
| | NPN, NO | **T08-D310S-F** | **T08-D360S-F** | **T08-D313S-F** | **T08-D363S-F** |
| | PNP, NO | **T08-D410S-F** | **T08-D460S-F** | **T08-D413S-F** | **T08-D463S-F** |
| | NPN, NC | **T08-D510S-F** | **T08-D560S-F** | **T08-D513S-F** | **T08-D563S-F** |
| | PNP, NC | **T08-D610S-F** | **T08-D660S-F** | **T08-D613S-F** | **T08-D663S-F** |

**8 mm Diameter Short Body**
Threaded body with cable or integral connector to simplify installation. This series features greater miniaturization, increased sensing distance and 5V logic compatibility.

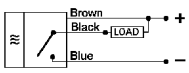

NPN, NO

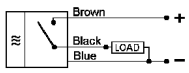

PNP, NO

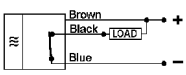

NPN, NC

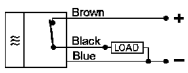

PNP, NC

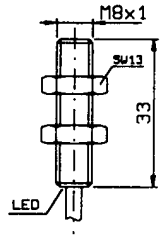


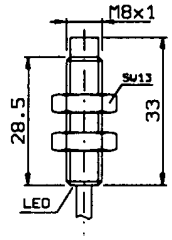


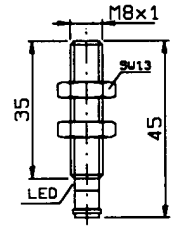


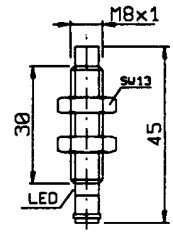


| | | | | |
|---|---|---|---|---|
| Operating Distance | 1.5 mm | 3.0 mm | 1.5 mm | 3.0 mm |
| Power Supply | 5 - 30 VDC | | | |
| Power Drain | < 10 mA | | | |
| Voltage Drop (on state) | < 1.7 V | | | |
| Switching Current (max) | 200 mA max. | | | |
| Short Circuit Protection | Yes | | | |
| Operating Frequency | 1 kHz max. | | | |
| Repeatability | not specified | | | |
| Case | AISI 303 Stainless Steel | | | |
| Flush Mounting | Yes | No | Yes | No |
| Protection Degree | IP 67 | | | |
| Operating Temperature | -25°C to +75°C | | | |
| Output Connection | Cable: PVC, 22 AWG, 2 m long | | Connector | |

| Output Function | | | |
|---|---|---|---|
| | NPN, NO | **XT08-D310-F** | **XT08-D313-F** |
| | PNP, NO | **XT08-D410-F** | **XT08-D413-F** |
| | NPN, NC | **XT08-D510-F** | **XT08-D513-F** |
| | PNP, NC | **XT08-D610-F** | **XT08-D613-F** |

**8 mm Diameter Extended Operating Distance**
Threaded body with cable or integral connector to simplify installation.

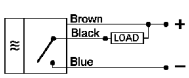

NPN, NO

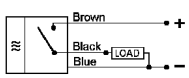

PNP, NO

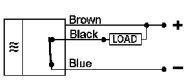

NPN, NC

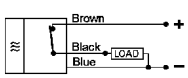

PNP, NC

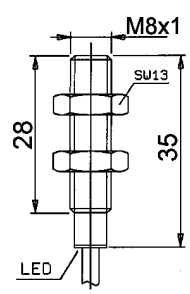


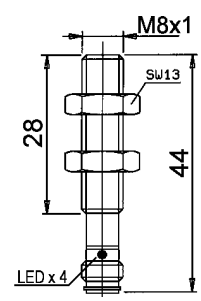


| | | |
|---|---|---|
| Operating Distance | 2.0 mm | |
| Power Supply | 10 - 30 VDC | |
| Power Drain | < 12 mA | |
| Voltage Drop (on state) | < 1.8 V | |
| Switching Current (max) | 200 mA max. | |
| Short Circuit Protection | Yes | |
| Operating Frequency | 2 kHz max. | |
| Repeatability | < 0.01 mm | |
| Case | Stainless Steel | |
| Flush Mounting | Yes | |
| Protection Degree | IP 67 | |
| Operating Temperature | -25°C to +70°C | |
| Output Connection | Cable: PVC, 22 AWG, 2 m long | Connector |

Courtesy of Steven Engineering, Inc. • 230 Ryan Way, South San Francisco, CA, 94080-6370 • Main Office: (650) 588-9200 • Outside Local Area: (800) 258-9200 • www.stevenengineering.com

| | | | | | |
|---|---|---|---|---|---|
| Output Function | NPN, NO | **T12-D310-F** | **T12-D360-F** | **T12-D318-F** | **T12-D368-F** |
| | PNP, NO | **T12-D410-F** | **T12-D460-F** | **T12-D418-F** | **T12-D468-F** |
| | NPN, NC | | | **T12-D518-F** | **T12-D568-F** |
| | PNP, NC | | | **T12-D618-F** | **T12-D668-F** |
| | NPN, Complementary | **T12-D010-F** | **T12-D060-F** | **T12-D018-F** | **T12-D068-F** |
| | PNP, Complementary | **T12-D710-F** | **T12-D760-F** | **T12-D718-F** | **T12-D768-F** |

**12 mm Diameter**
Threaded body with cable or integral connector to simplify installation. LED indicators on all models. Short circuit and reverse polarity protection standard on three-wire models. Available with complementary NO and NC outputs. These models conform to EN 50008-EN50044 and meet the CE EMC directive.

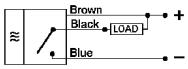

NPN, NO

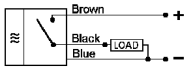

PNP, NO

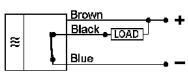

NPN, NC

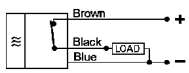

PNP, NC

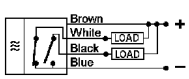

NPN, Complementary

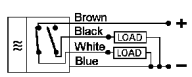

PNP, Complementary

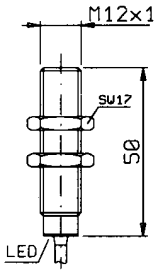


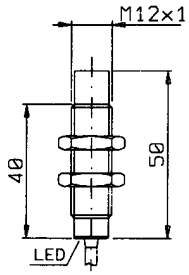


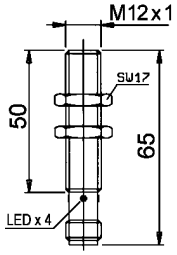


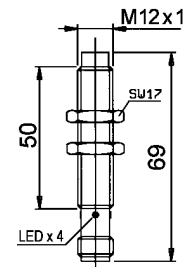


| | | | | |
|---|---|---|---|---|
| Operating Distance | 2.0 mm | 4.0 mm | 2.0 mm | 4.0 mm |
| Power Supply | 10 - 30 VDC | | | |
| Power Drain | < 5 mA | | < 18 mA | |
| Voltage Drop (on state) | < 3 V | | < 1.8 V | |
| Switching Current (max) | 200 mA | | | |
| Short Circuit Protection | Yes (3 wire only) | | | |
| Operating Frequency | 1.0 kHz max. | | | |
| Repeatability | not specified | | < 0.01 mm | |
| Case | Nickel-plated Brass | | | |
| Flush Mounting | Yes | No | Yes | No |
| Protection Degree | IP 67 | | | |
| Operating Temperature | -25°C to +70°C | | | |
| Output Connection | Cable: PVC, 22 AWG, 2 m long | | Connector | |

Courtesy of Steven Engineering, Inc. • 230 Ryan Way, South San Francisco, CA, 94080-6370 • Main Office: (650) 588-9200 • Outside Local Area: (800) 258-9200 • www.stevenengineering.com

Courtesy of Steven Engineering, Inc. • 230 Ryan Way, South San Francisco, CA, 94080-6370 • Main Office: (650) 588-9200 • Outside Local Area: (800) 258-9200 • www.stevenengineering.com

| Output Function | | | | | |
|---|---|---|---|---|---|
| | NPN, NO | **T12-D310S-F** | **T12-D360S-F** | **T12-D318S-F** | **T12-D368S-F** |
| | PNP, NO | **T12-D410S-F** | **T12-D460S-F** | **T12-D418S-F** | **T12-D468S-F** |
| | NPN, Complementary | **T12-D010S-F** | **T12-D060S-F** | **T12-D018S-F** | **T12-D068S-F** |
| | PNP, Complementary | **T12-D710S-F** | **T12-D760S-F** | **T12-D718S-F** | **T12-D768S-F** |

**12 mm Diameter Short Body**
Threaded body with cable or integral connector to simplify installation. This series features greater miniaturization, increased sensing distance and 5V logic compatibility. LED indicators on all models. Available with complementary NO and NC outputs.

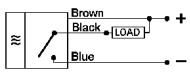

NPN, NO

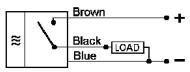

PNP, NO

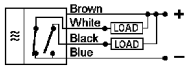

NPN, Complementary

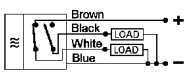

PNP, Complementary

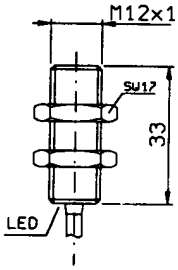


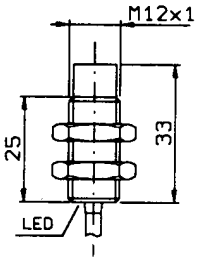


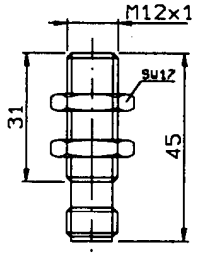


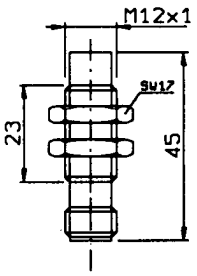


| | | | | |
|---|---|---|---|---|
| Operating Distance | 3.0 mm | 5.0 mm | 3.0 mm | 5.0 mm |
| Power Supply | 5 - 30 VDC | | | |
| Power Drain | < 10 mA | | | |
| Voltage Drop (on state) | < 1.7 V | | | |
| Switching Current (max) | 200 mA max. | | | |
| Short Circuit Protection | No | | | |
| Operating Frequency | 1 kHz max. | | | |
| Repeatability | not specified | | | |
| Case | Nickel -Plated Brass | | | |
| Flush Mounting | Yes | No | Yes | No |
| Protection Degree | IP 67 | | | |
| Operating Temperature | -25°C to +75°C | | | |
| Output Connection | Cable: PVC, 22 AWG, 2 m long | | Connector | |

| Output Function | NPN, NO | **TT12-D310-F** | **TT12-D360-F** |
|---|---|---|---|

**12 mm Diameter**
Threaded body with cable or integral connector to simplify installation. 5 to 30 V range permits operation on most DC systems. Low voltage drop insures TTL compatiblity.

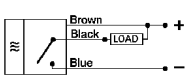

NPN, NO

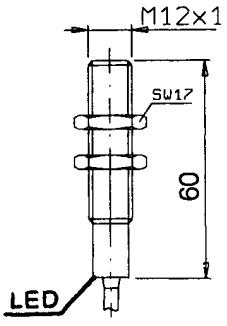


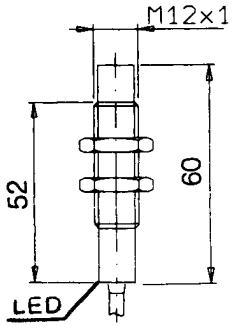


| | | |
|---|---|---|
| Operating Distance | 2.0 mm | 4.0 mm |
| Power Supply | 5 - 30 VDC | |
| Power Drain | 6 mA | |
| Voltage Drop (on state) | < 0.7 V | |
| Switching Current (max) | 150 mA max. | |
| Short Circuit Protection | No | |
| Operating Frequency | 2.0 kHz | 1.0 kHz |
| Repeatability | not specified | |
| Case | Nickel-Plated Brass | |
| Flush Mounting | Yes | No |
| Protection Degree | IP 67 | |
| Operating Temperature | -25°C to +70°C | |
| Output Connection | Cable: PVC, 22 AWG, 2 m long | |

| Output Function | | | |
|---|---|---|---|
| | NPN, NO | **XT12-D310-F** | **XT12-D318-F** |
| | PNP, NO | **XT12-D410-F** | **XT12-D418-F** |
| | NPN, NC | **XT12-D510-F** | **XT12-D518-F** |
| | PNP, NC | **XT12-D610-F** | **XT12-D618-F** |

**12 mm Diameter**
**Extended Operating Distance**
Threaded body with cable or integral connector to simplify installation.

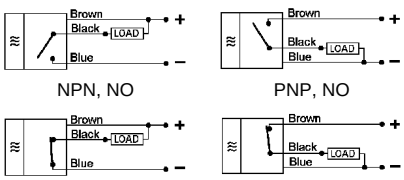


NPN, NO PNP, NO
NPN, NC PNP, NC

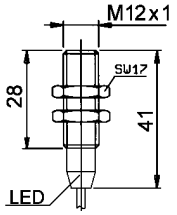


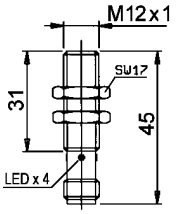


| | | |
|---|---|---|
| Operating Distance | 4.0 mm | |
| Power Supply | 10 - 30 VDC | |
| Power Drain | < 18 mA | |
| Voltage Drop (on state) | < 1.8 V | |
| Switching Current (max) | 200 mA max. | |
| Short Circuit Protection | Yes | |
| Operating Frequency | 1.0 kHz max. | |
| Repeatability | < 0.01 mm | |
| Case | Stainless Steel | |
| Flush Mounting | Yes | |
| Protection Degree | IP 67 | |
| Operating Temperature | -25°C to +70°C | |
| Output Connection | Cable: PVC, 22 AWG, 2 m long | Connector |

| Output Function | | | | | |
|---|---|---|---|---|---|
| | NO | **T12-D810-F** | **T12-D860-F** | **T12-D818-F** | **T12-D868-F** |
| | NC | **T12-D910-F** | **T12-D960-F** | **T12-D918-F** | **T12-D968-F** |

**12 mm Diameter DC Two Wire**
Threaded body with cable or integral connector to simplify installation. Simple two wire connection. LED indicators on all models. Short circuit and reverse polarity protection standard. These models conform to EN 50008-EN50044 and meet the CE EMC directive.

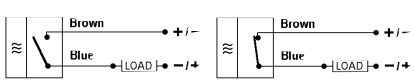


NO NC

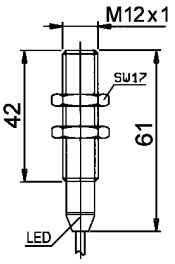


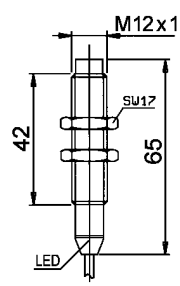


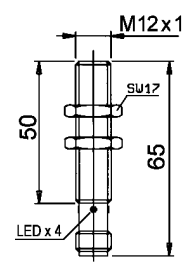


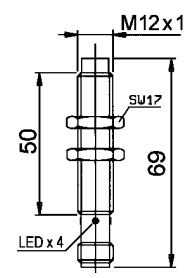


| | | | | |
|---|---|---|---|---|
| Operating Distance | 2.0 mm | 4.0 mm | 2.0 mm | 4.0 mm |
| Power Supply | 10 - 30 VDC | | | |
| Max. Switching Current | 100 mA | | | |
| Min. Switching Current | < 1.5 mA | | | |
| Leakage Current | < 0.6 mA | | | |
| Voltage Drop (on state) | < 6.5 V | | | |
| Switching Current (max) | 1 kHz max. | | | |
| Short Circuit Protection | Yes | | | |
| Operating Frequency | 1.0 kHz | | | |
| Repeatability | < 0.01 mm | | | |
| Case | Nickel-plated Brass | | | |
| Flush Mounting | Yes | No | Yes | No |
| Protection Degree | IP 67 | | | |
| Operating Temperature | -25°C to +70°C | | | |
| Output Connection | Cable: PVC, 22 AWG, 2 m long | | Connector | |

Courtesy of Steven Engineering, Inc. • 230 Ryan Way, South San Francisco, CA, 94080-6370 • Main Office: (650) 588-9200 • Outside Local Area: (800) 258-9200 • www.stevenengineering.com

| | | | | | |
|---|---|---|---|---|---|
| Output Function | NPN, NO | **T18-D310-F** | **T18-D360-F** | **T18-D318-F** | **T18-D368-F** |
| | PNP, NO | **T18-D410-F** | **T18-D460-F** | **T18-D418-F** | **T18-D468-F** |
| | NPN, NC | | | **T18-D518-F** | **T18-D568-F** |
| | PNP, NC | | | **T18-D618-F** | **T18-D668-F** |
| | NPN, Complementary | **T18-D010-F** | **T18-D060-F** | **T18-D018-F** | **T18-D068-F** |
| | PNP, Complementary | **T18-D710-F** | **T18-D760-F** | **T18-D718-F** | **T18-D768-F** |

**18 mm Diameter**
Threaded body with cable or integral connector to simplify installation. LED indicators on all models. Short circuit and reverse polarity protection standard on three-wire models. Available with complementary NO and NC outputs. These models conform to EN 50008-EN50044 and meet the CE EMC directive.

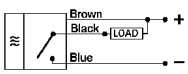

NPN, NO

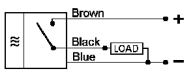

PNP, NO

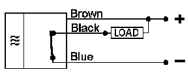

NPN, NC

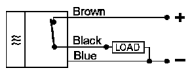

PNP, NC

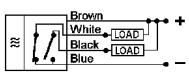

NPN, Complementary

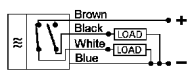

PNP, Complementary

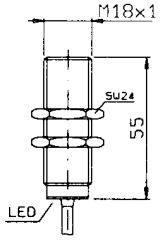


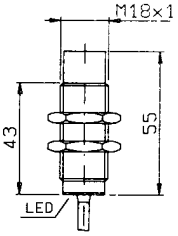


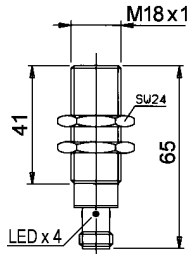


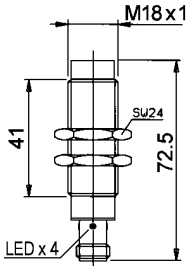


| | | | | |
|---|---|---|---|---|
| Operating Distance | 5.0 mm | 8.0 mm | 5.0 mm | 8.0 mm |
| Power Supply | 10 - 30 VDC | | | |
| Power Drain | < 5 mA | | < 18 mA | |
| Voltage Drop (on state) | < 3 V | | < 1.8 V | |
| Switching Current (max) | 150 mA | | 200 mA | |
| Short Circuit Protection | Yes (3 wire only) | | | |
| Operating Frequency | 1.0 kHz max. | 500 Hz max. | 1.0 kHz max. | |
| Repeatability | not specified | | < 0.01 mm | |
| Case | Nickel-plated Brass | | | |
| Flush Mounting | Yes | No | Yes | No |
| Protection Degree | IP 67 | | | |
| Operating Temperature | -25°C to +70°C | | | |
| Output Connection | Cable: PVC, 22 AWG, 2 m long | | Connector | |

Courtesy of Steven Engineering, Inc. • 230 Ryan Way, South San Francisco, CA, 94080-6370 • Main Office: (650) 588-9200 • Outside Local Area: (800) 258-9200 • www.stevenengineering.com

| Output Function | | | |
|---|---|---|---|
| | NPN, NO | **XT18-D310-F** | **XT18-D318-F** |
| | PNP, NO | **XT18-D410-F** | **XT18-D418-F** |
| | NPN, NC | **XT18-D510-F** | **XT18-D518-F** |
| | PNP, NC | **XT18-D610-F** | **XT18-D618-F** |

**18 mm Diameter**
**Extended Operating Distance**
Threaded body with cable or integral connector to simplify installation.

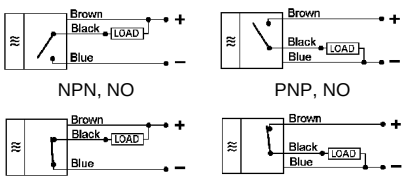


NPN, NO PNP, NO

NPN, NC PNP, NC

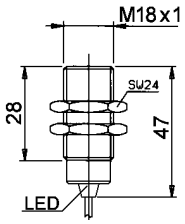


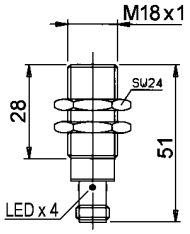


| | | |
|---|---|---|
| Operating Distance | 8.0 mm | |
| Power Supply | 10 - 30 VDC | |
| Power Drain | < 18 mA | |
| Voltage Drop (on state) | < 1.8 V | |
| Switching Current (max) | 200 mA max. | |
| Short Circuit Protection | Yes | |
| Operating Frequency | 200 Hz max. | |
| Repeatability | < 0.02 mm | |
| Case | Stainless Steel | |
| Flush Mounting | Yes | |
| Protection Degree | IP 67 | |
| Operating Temperature | -25°C to +70°C | |
| Output Connection | Cable: PVC, 22 AWG, 2 m long | Connector |

| Output Function | | | | | |
|---|---|---|---|---|---|
| | NO | **T18-D810-F** | **T18-D860-F** | **T18-D818-F** | **T18-D868-F** |
| | NC | **T18-D910-F** | **T18-D960-F** | **T18-D918-F** | **T18-D968-F** |

**18 mm Diameter DC Two Wire**
Threaded body with cable or integral connector to simplify installation. Simple two wire connection. LED indicators on all models. Short circuit and reverse polarity protection standard. These models conform to EN 50008-EN50044 and meet the CE EMC directive.

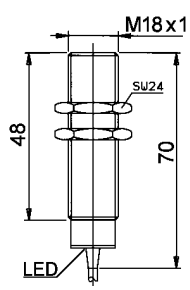


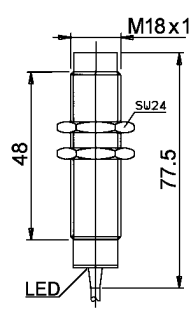


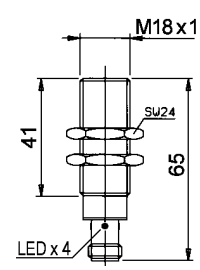


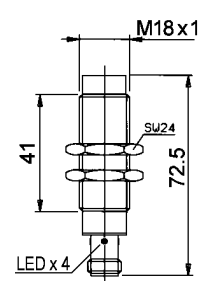


| | | | | |
|---|---|---|---|---|
| Operating Distance | 5.0 mm | 8.0 mm | 5.0 mm | 8.0 mm |
| Power Supply | 10 - 30 VDC | | | |
| Max. Switching Current | 100 mA | | | |
| Min. Switching Current | < 1.5 mA | | | |
| Leakage Current | < 0.6 mA | | | |
| Voltage Drop (on state) | < 6.5 V | | | |
| Switching Current (max) | 1 kHz max. | | | |
| Short Circuit Protection | Yes | | | |
| Operating Frequency | 600 Hz | | | |
| Repeatability | < 0.02 mm | | | |
| Case | Nickel-plated Brass | | | |
| Flush Mounting | Yes | No | Yes | No |
| Protection Degree | IP 67 | | | |
| Operating Temperature | -25°C to +70°C | | | |
| Output Connection | Cable: PVC, 22 AWG, 2 m long | | Connector | |

Courtesy of Steven Engineering, Inc. • 230 Ryan Way, South San Francisco, CA, 94080-6370 • Main Office: (650) 588-9200 • Outside Local Area: (800) 258-9200 • www.stevenengineering.com

| | | | | | |
|---|---|---|---|---|---|
| Output Function | NPN, NO | **T30-D310-F** | **T30-D360-F** | **T30-D318-F** | **T30-D368-F** |
| | PNP, NO | **T30-D410-F** | **T30-D460-F** | **T30-D418-F** | **T30-D468-F** |
| | NPN, NC | | | **T30-D518-F** | **T30-D568-F** |
| | PNP, NC | | | **T30-D618-F** | **T30-D668-F** |
| | NPN, Complementary | **T30-D010-F** | **T30-D060-F** | **T30-D018-F** | **T30-D068-F** |
| | PNP, Complementary | **T30-D710-F** | **T30-D760-F** | **T30-D718-F** | **T30-D768-F** |

**30 mm Diameter**

Threaded body with cable or integral connector to simplify installation. LED indicators on all models. Short circuit and reverse polarity protection standard on three-wire models. Available with complementary NO and NC outputs. These models conform to EN 50008-EN50044 and meet the CE EMC directive.

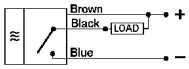


NPN, NO

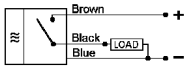


PNP, NO

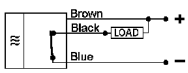


NPN, NC

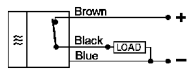


PNP, NC

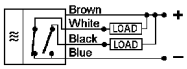


NPN, Complementary

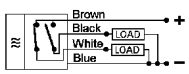


PNP, Complementary

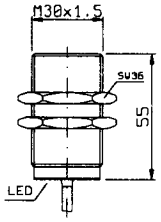


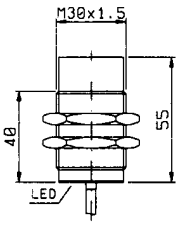


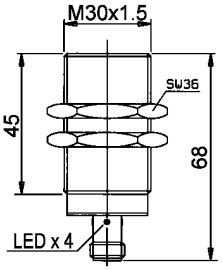


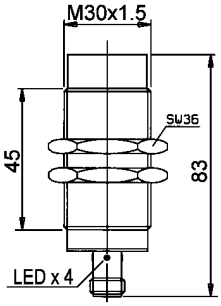


| | | | | |
|---|---|---|---|---|
| Operating Distance | 10 mm | 15 mm | 10 mm | 15 mm |
| Power Supply | 10 - 30 VDC | | | |
| Power Drain | < 5 mA | | < 18 mA | |
| Voltage Drop (on state) | < 3 V | | < 1.8 V | |
| Switching Current (max) | 150 mA | | 200 mA | |
| Short Circuit Protection | Yes (3 wire only) | | | |
| Operating Frequency | 300 Hz max. | 150 Hz max. | 300 Hz max. | |
| Repeatability | not specified | | < 0.05 mm | |
| Case | Nickel-plated Brass | | | |
| Flush Mounting | Yes | No | Yes | No |
| Protection Degree | IP 67 | | | |
| Operating Temperature | -25°C to +70°C | | | |
| Output Connection | Cable: PVC, 22 AWG, 2 m long | | Connector | |

Courtesy of Steven Engineering, Inc. • 230 Ryan Way, South San Francisco, CA, 94080-6370 • Main Office: (650) 588-9200 • Outside Local Area: (800) 258-9200 • www.stevenengineering.com

| Output Function | | | |
|---|---|---|---|
| | NPN, NO | **XT30-D310-F** | **XT30-D318-F** |
| | PNP, NO | **XT30-D410-F** | **XT30-D418-F** |
| | NPN, NC | **XT30-D510-F** | **XT30-D518-F** |
| | PNP, NC | **XT30-D610-F** | **XT30-D618-F** |

**30 mm Diameter**
**Extended Operating Distance**
Threaded body with cable or integral connector to simplify installation.

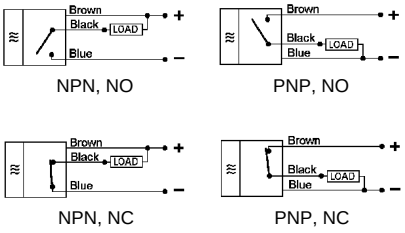


NPN, NO PNP, NO

NPN, NC PNP, NC

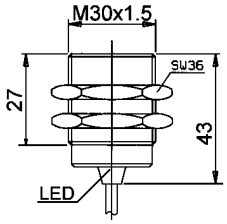


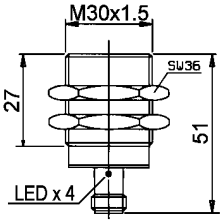


| | | |
|---|---|---|
| Operating Distance | 15 mm | |
| Power Supply | 10 - 30 VDC | |
| Power Drain | < 18 mA | |
| Voltage Drop (on state) | < 1.8 V | |
| Switching Current (max) | 200 mA max. | |
| Short Circuit Protection | Yes | |
| Operating Frequency | 200 Hz max. | |
| Repeatability | < 0.05 mm | |
| Case | Nickel-plated Brass | |
| Flush Mounting | Yes | |
| Protection Degree | IP 67 | |
| Operating Temperature | -25°C to +70°C | |
| Output Connection | Cable: PVC, 22 AWG, 2 m long | Connector |

| Output Function | | | | | |
|---|---|---|---|---|---|
| | NO | **T30-D810-F** | **T30-D860-F** | **T30-D818-F** | **T30-D868-F** |
| | NC | **T30-D910-F** | **T30-D960-F** | **T30-D918-F** | **T30-D968-F** |

**30 mm Diameter DC Two Wire**
Threaded body with cable or integral connector to simplify installation. Simple two wire connection. LED indicators on all models. Short circuit and reverse polarity protection standard. These models conform to EN 50008-EN50044 and meet the CE EMC directive.

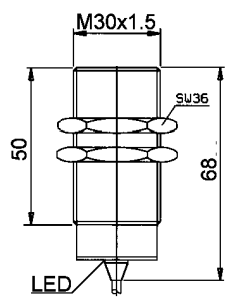


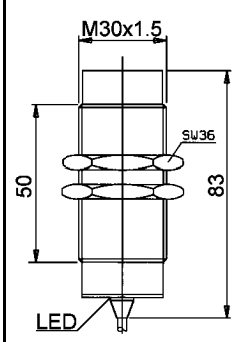


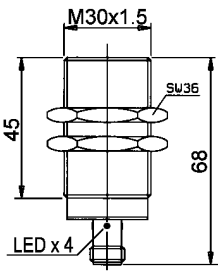


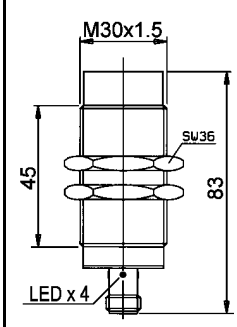


| | | | | |
|---|---|---|---|---|
| Operating Distance | 10 mm | 15 mm | 10 mm | 15 mm |
| Power Supply | 10 - 30 VDC | | | |
| Max. Switching Current | 100 mA | | | |
| Min. Switching Current | < 1.5 mA | | | |
| Leakage Current | < 0.6 mA | | | |
| Voltage Drop (on state) | < 6.5 V | | | |
| Switching Current (max) | 1 kHz max. | | | |
| Short Circuit Protection | Yes | | | |
| Operating Frequency | 300 Hz | | | |
| Repeatability | < 0.05 mm | | | |
| Case | Nickel-plated Brass | | | |
| Flush Mounting | Yes | No | Yes | No |
| Protection Degree | IP 67 | | | |
| Operating Temperature | -25°C to +70°C | | | |
| Output Connection | Cable: PVC, 22 AWG, 2 m long | | Connector | |

Courtesy of Steven Engineering, Inc. • 230 Ryan Way, South San Francisco, CA, 94080-6370 • Main Office: (650) 588-9200 • Outside Local Area: (800) 258-9200 • www.stevenengineering.com

| Output Function | | | | | |
|---|---|---|---|---|---|
| | NPN, Complementary | **L40-D010-F** | **L40-D060-F** | | |
| | PNP, Complementary | **L40-D710-F** | **L40-D760-F** | | |
| | NO/NC Selectable | | | **L40-DP10-F** | **L40-DP60-F** |

**Limit Switch Style**
Sensing head can be oriented in 5 different directions. Two wire or four wire, complementary output models available. LED status indicator on all models. Compliant with CE EMC directive.

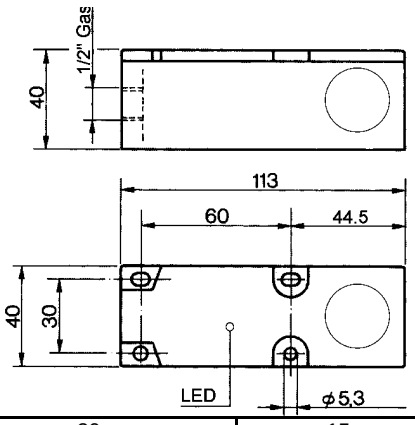


| | | | | |
|---|---|---|---|---|
| Operating Distance | 15 mm | 20 mm | 15 mm | 20 mm |
| Power Supply | 10 - 55 VDC | | 10 - 30 VDC | |
| Power Drain | < 10 mA | | – | |
| Leakage Current | – | | < 0.6 mA | |
| Voltage Drop (on state) | < 1.8 V | | < 6.5 V | |
| Switching Current (max) | 200 mA max. | | 100 mA max. | |
| Switching Current (min) | – | | < 1.5 mA | |
| Operating Frequency | 300 Hz | | | |
| Repeatability | < 0.3 mm | | | |
| Case | Plastic | | | |
| Flush Mounting | Yes | No | Yes | No |
| Protection Degree | IP 65 | | | |
| Operating Temperature | -25 to 70°C | | | |
| Output Connection | Terminal Block | | | |

| Output Function | | | | | |
|---|---|---|---|---|---|
| | NPN, NO | | | | **1221-1-A-1-A** |
| | PNP, NC | **1217P-1** | **1217P-2** | **1217P-3** | |

**Limit Switch Style**
These two economical limit style switches can be applied where the advanced features of some other models are not needed. The 1221 when used in combination with an (issc) Model 1262 provides MSHA approved motion detection in hazardous locations. The 1217P sensor can be used with the (issc) Model 1217 motion detector in non-hazardous applications. Both units made in the USA.

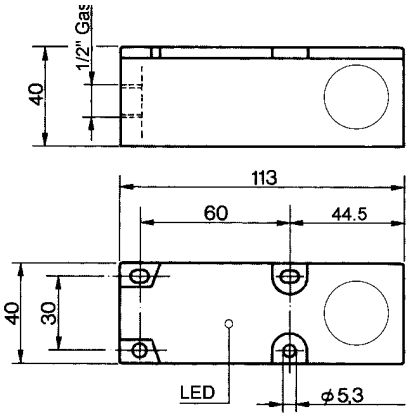


| | | | | |
|---|---|---|---|---|
| Operating Distance | 12.7 mm (0.5 in) | | | 14.3 mm (0.56 in) |
| Sensing Direction | End | Right Side | Left Side | End |
| Power Supply | 10 - 40 VDC | | | 10 - 26 VDC |
| Power Drain | – | | | <20 mA |
| Voltage Drop (on state) | < 0.7 V | | | < 0.7 V |
| Switching Current (max) | 100 mA | | | 100 mA |
| Operating Frequency | 150 Hz | | | 1.0 kHz |
| Repeatability | – | | | 0.5 mm (0.02 in) |
| Case | Plastic ABS/Polycarbonate | | | |
| Operating Temperature | -25 to 75°C | | | -20 to 65°C |
| Output Connection | Terminal Block | | | |

For Additional data on the Model 1217 and Model 1262 refer to the
(issc) Solid State Timer and Control Components Catalog
Bulletin 1000

Courtesy of Steven Engineering, Inc. • 230 Ryan Way, South San Francisco, CA, 94080-6370 • Main Office: (650) 588-9200 • Outside Local Area: (800) 258-9200 • www.stevenengineering.com

| Output Function | | | | | | | |
|---|---|---|---|---|---|---|---|
| | NO | **1250-1-A-1** | **1250-2-A-1** | **1250-3-A-1** | **1250-1-A-2** | **1250-2-A-2** | **1250-3-A-2** |
| | NC | **1250-1-B-1** | **1250-2-B-1** | **1250-3-B-1** | **1250-1-B-2** | **1250-2-B-2** | **1250-3-B-2** |
| | NO with built-in timer | | | | **1248-1A4P** | | |

## Limit Switch Style

These two models have a universal 20-250 VAC/DC power supply. The 1250 is an economical limit style switch. The 1248A also features built-in motion detector timer circuitry. Three user selectable ranges cover 5 to 7500 pulses per minute. As long as speed remains above set point output output is energized. There is an adjustable start-up delay to allow equipment to acheive operating speed.
Both units made in the USA.

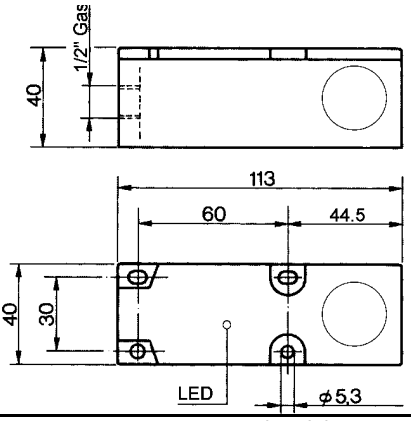


| | | | | | | |
|---|---|---|---|---|---|---|
| Operating Distance | 12.7 mm (0.5 in) | | | | | |
| Sensing Direction | End | Right Side | Left Side | End | Right Side | Left Side |
| Power Supply | 20 - 250 VAC/DC | | | | | |
| Power Drain | < 10 mA | | | | | |
| Leakage Current | 2.0 mA | | | | | |
| Voltage Drop (on state) | < 1.8 V | | | | | |
| Switching Current (max) | 500 mA max. | | | | | |
| In-rush Current < 8 msec | 7.0 A | | | | | |
| Operating Frequency | 166 Hz | | | | | |
| Case | Plastic ABS/Polycarbonate | | | | | |
| Protection Degree | NEMA 1, 3, 4, 6,12,13, IP 67 | | | | | |
| Operating Temperature | -25 to 70°C | | | | | |
| Output Connection | Termial Block | | | Connector | | |

For Additional data on the Model 1248A refer to the
(issc) Solid State Timer and Control Components Catalog
Bulletin 1000

NPN, Complementary

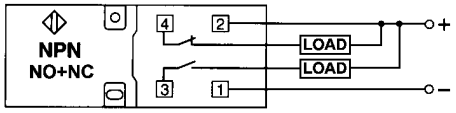


PNP, Complementary

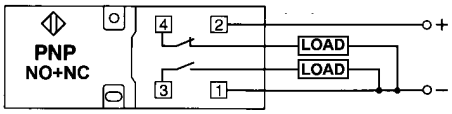


NO/NC selectable

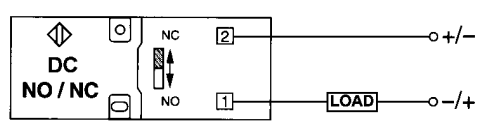


NPN, NO

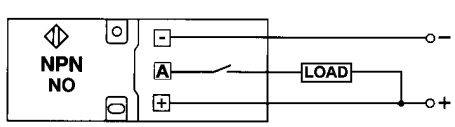


PNP, NC

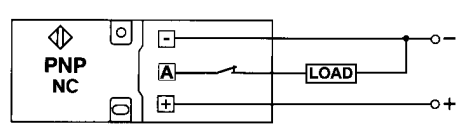


1248A and 1250 with connector

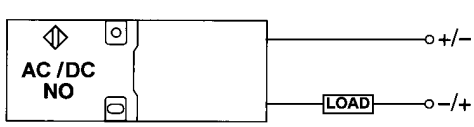


1250 with internal terminals

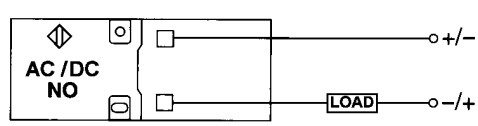


Courtesy of Steven Engineering, Inc. • 230 Ryan Way, South San Francisco, CA, 94080-6370 • Main Office: (650) 588-9200 • Outside Local Area: (800) 258-9200 • www.stevenengineering.com

| Model Number | L80-D064-F | L80-D764-F | L80-DP64-F |
|---|---|---|---|

**Block Shaped Case**
Adjustable operating distance up to 60 mm. Four wire models have both NO and NC outputs. Two wire version has selectable NO or NC output. All models have LED indicators and are compliant with the CE EMC directive.

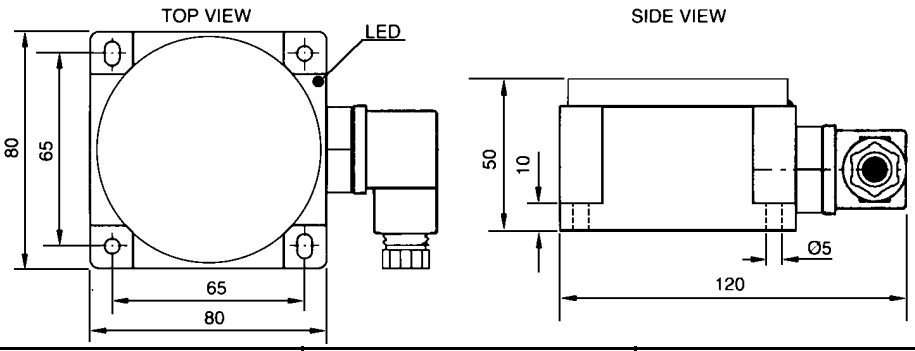


| | | | |
|---|---|---|---|
| Output Function | NPN, Complementary | PNP, Complementary | Two-wire NO/NC selectable |
| Operating Distance | 10 - 60 mm adjustable | | |
| Power Supply | 10 - 55 VDC | | 10 - 30 VDC |
| Power Drain | < 12 mA | | |
| Voltage Drop (on state) | < 1.8 V | | |
| Switching Current (max) | 200 mA | | 100 mA |
| Short Circuit Protection | Yes | | |
| Operating Frequency | 50 Hz | | |
| Repeatability | not specified | | |
| Case | Plastic | | |
| Flush Mounting | No | | |
| Protection Degree | IP 65 | | |
| Operating Temperature | -25°C to +70°C | | |
| Output Connection | Connector(included) | | |

DC NPN, Complementary

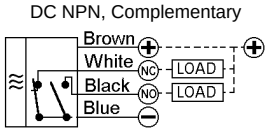


DC Two wire, NO selected

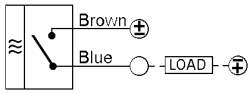


DC PNP, Complementary

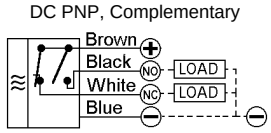


DC Two wire, NC selected

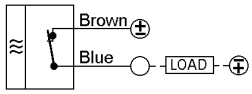


VIEW OF MALE CONNECTOR

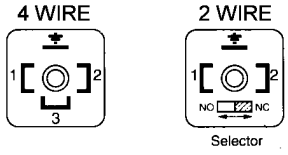


| Version | Contact numeration | | | |
|---|---|---|---|---|
| | 1 | 2 | 3 | ⏚ |
| 2 WIRE DC | – | + | | |
| 3 WIRE DC | – | + | | NC/NO |
| 4 WIRE DC | – | + | NC | NO |

**Sensitivity Adjustment**
This seonsor is supplied with a trimmer for sensitivity adjustment. The sesitivity increases when the timmer is rotated in the clockwise direction and decreases in the counterclockwise direction. Avoid setting the distance greater than 60 mm. For optimum performance make the adjustment after installation to take other nearby metallic objects into consideration. The sensor is supplied preset to 50 mm.

See AC supply models on page 24.

Courtesy of Steven Engineering, Inc. • 230 Ryan Way, South San Francisco, CA, 94080-6370 • Main Office: (650) 588-9200 • Outside Local Area: (800) 258-9200 • www.stevenengineering.com

| | | |
|---|---|---|
| Output Function | NPN, NO | **L17-D360-F** |
| | PNP, NO | **L17-D460-F** |
| | NPN, NC | **L17-D560-F** |
| | PNP, NC | **L17-D660-F** |

**Rectangular**
Low cost, equipped with polarity protection and compliant with the CE EMC directive.

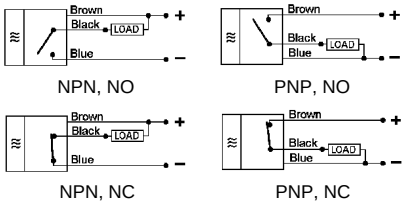


NPN, NO PNP, NO

NPN, NC PNP, NC

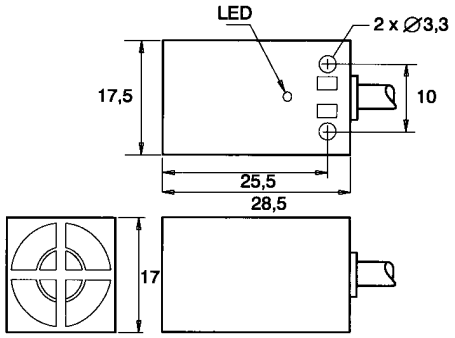


| | |
|---|---|
| Operating Distance | 4.0 mm |
| Power Supply | 10 - 30 VDC |
| Power Drain | < 12 mA |
| Voltage Drop (on state) | < 1.0 V |
| Switching Current (max) | 100 mA |
| Operating Frequency | 500 Hz |
| Case | Plastic |
| Flush Mounting | No |
| Protection Degree | IP 68 |
| Operating Temperature | -25°C to +70°C |
| Output Connection | Cable PVC: AWG 26, 2m |

| | | | |
|---|---|---|---|
| Output Function | NPN, Complementary | **L12-D010-F** | **L12-D060-F** |
| | PNP, Complementary | **L12-D710-F** | **L12-D760-F** |

**Rectangular**
Equipped with short circuit and polarity protection. LED indicator. IP67 protection and compliant with the CE EMC directive.

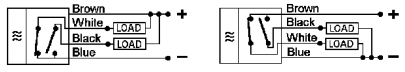


NPN, Complementary PNP, Complementary

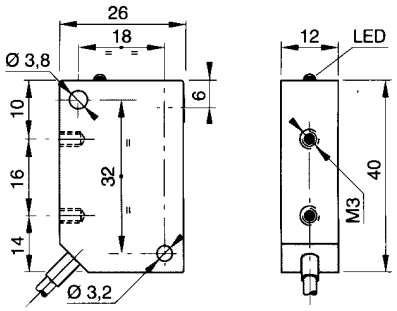


| | | |
|---|---|---|
| Operating Distance | 2.0 mm | 4.0 mm |
| Power Supply | 10 - 30 VDC | |
| Power Drain | < 12 mA | |
| Voltage Drop (on state) | < 1.8 V | |
| Switching Current (max) | 200 mA | |
| Short Circuit Protection | Yes | |
| Operating Frequency | 500 Hz | |
| Repeatability | <0.01 mm | |
| Case | Plastic | |
| Flush Mounting | Yes | No |
| Protection Degree | IP 67 | |
| LED State Indicator | Yes | |
| Operating Temperature | -25°C to +70°C | |
| Output Connection | Cable PVC: L = 2m | |

Courtesy of Steven Engineering, Inc. • 230 Ryan Way, South San Francisco, CA, 94080-6370 • Main Office: (650) 588-9200 • Outside Local Area: (800) 258-9200 • www.stevenengineering.com

Courtesy of Steven Engineering, Inc. • 230 Ryan Way, South San Francisco, CA, 94080-6370 • Main Office: (650) 588-9200 • Outside Local Area: (800) 258-9200 • www.stevenengineering.com

| Output Function | | | |
|---|---|---|---|
| | NPN, NO | **L08-D360-F** | **L08-D363-F** |
| | PNP, NO | **L08-D460-F** | **L08-D463-F** |
| | NPN, NC | **L08-D560-F** | **L08-D563-F** |
| | PNP, NC | **L08-D660-F** | **L08-D663-F** |

**Rectangular**
Equipped with short circuit and polarity protection. LED indicator. IP67 protection and compliant with the CE EMC directive.

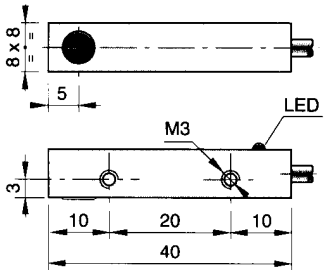


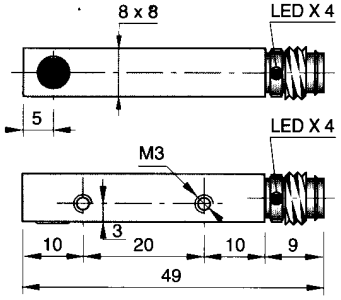


| | | |
|---|---|---|
| Operating Distance | 2.0 mm | 4.0 mm |
| Power Supply | 10 - 30 VDC | |
| Power Drain | < 12 mA | |
| Voltage Drop (on state) | < 1.8 V | |
| Switching Current (max) | 200 mA | |
| Short Circuit Protection | Yes | |
| Operating Frequency | 2.0 kHz | |
| Repeatability | < 0.01 | |
| Case | Nickel-Plated Brass | |
| Flush Mounting | Yes | |
| Protection Degree | IP 67 | |
| Operating Temperature | -25°C to +70°C | |
| Output Connection | Cable PVC: AWG 26, 2m | Connector |

| Output Function | | | |
|---|---|---|---|
| | NPN, NO | **L10-D360-F** | **L10-D363-F** |
| | PNP, NO | **L10-D460-F** | **L10-D463-F** |
| | NPN, NC | **L10-D560-F** | **L10-D563-F** |
| | PNP, NC | **L10-D660-F** | **L10-D663-F** |

**Rectangular**
Equipped with short circuit and polarity protection. LED indicator. IP67 protection and compliant with the CE EMC directive.

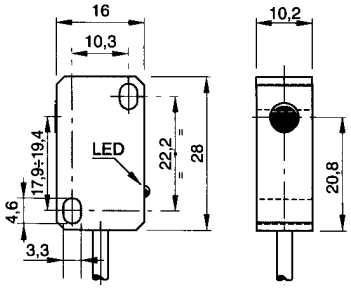


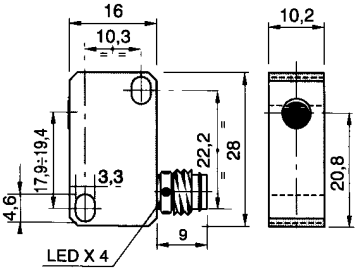


| | | |
|---|---|---|
| Operating Distance | 2.0 mm | 2.0 mm |
| Power Supply | 10 - 30 VDC | |
| Power Drain | < 12 mA | |
| Voltage Drop (on state) | < 1.8 V | |
| Switching Current (max) | 200 mA | |
| Short Circuit Protection | Yes | |
| Operating Frequency | 1.0 kHz | |
| Repeatability | < 0.01 | |
| Case | Plastic | |
| Flush Mounting | Yes | |
| Protection Degree | IP 67 | |
| Operating Temperature | -25°C to +70°C | |
| Output Connection | Cable PVC: AWG 26, 2m | Connector |

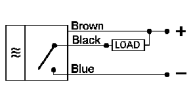

NPN, NO

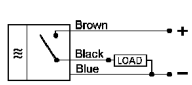

PNP, NO

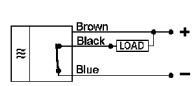

NPN, NC

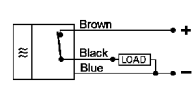

PNP, NC

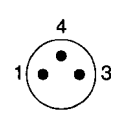


Male connector C1
1=Brown/+
3=Blue/-
4=Black/output NPN-PNP/NO-NC

| Output Function | NPN, NO / NAMUR | HT05-D310-F | HT08-D310-F | HT12-DN10-F |
|---|---|---|---|---|
| **High Temperature** These sensors can withstand temperatures up to 120°C, available in three body diameters from 5 mm to 12 mm | | 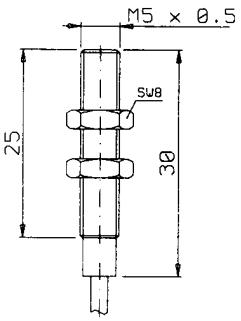  | 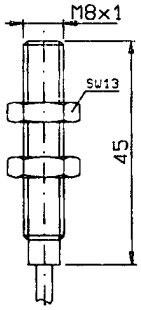  | 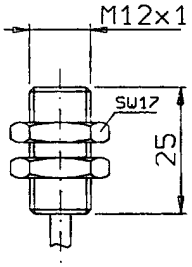  |
| External Diameter | | 5.0 mm | 8.0 mm | 12 mm |
| Operating Distance | | 0.8 mm | 1.0 mm | 2.0 mm |
| Power Supply | | 10 - 30 VDC | | 8 VDC |
| Power Drain | | < 5 mA | | – |
| Voltage Drop (on state) | | < 3 V | | – |
| Switching Current (max) | | 50 mA max. | | – |
| Current with Actuator | | – | | < 1.1 mA |
| Current without Actuator | | – | | > 2.2 mA |
| Operating Frequency | | 3.0 kHz max. | 2.0 kHz max. | |
| Case | | Stainless Steel | | Nickel-plated Brass |
| Flush Mounting | | Yes | | |
| Protection Degree | | IP 67 | | |
| **Operating Temperature** | | **-25°C to +130°C** | | **-25°C to +120°C** |
| Output Connection | | Cable: Silicone, 22 AWG, 2 m long | | |

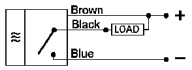


NPN, NO

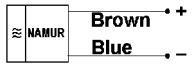


NAMUR

| Output Function | Analog, PNP 4 - 20 mA | T08-DA10-F | T12-DA10-F | T18-DA10-F | T30-DA10-F | L12-DA60-F |
|---|---|---|---|---|---|---|
| **Analog Current Output** Output current is proportional to the distance to target. | | 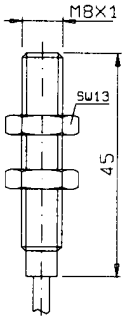  | 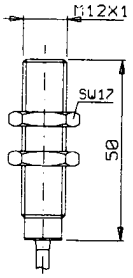  | 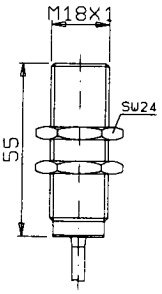  | 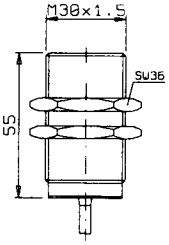  | 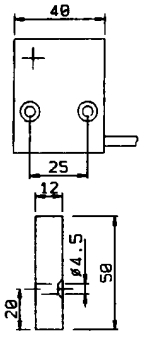  |
| Size | | 8.0 mm dia. | 12.0 mm dia. | 18.0 mm dia. | 30.0 mm dia. | 40 x 50 x 12 mm |
| Operating Distance | | 0.1 - 1.5 mm | 0.1 - 3.0 mm | 0.1 - 6.0 mm | 0.5 - 10 mm | 0 - 6.0 mm |
| Linearity Error | | < 5% | | | | < 2% |
| Power Supply | | 18 - 30 VDC | | | | 15 - 30 VDC |
| Power Drain | | < 35 mA | | | | < 5.0 mA |
| Output Current | | 4.0 mA @ max. dist. - 20 mA @ min. dist. | | | | 0.6 - 15.5 mA |
| Output Resistance | | 400 Ω | | | | |
| Case | | Nickel-plated Brass | | | | Polypropylene |
| Flush Mounting | | 3.0 kHz max. | Yes | | | No |
| Protection Degree | | IP 67 | | | | |
| Operating Temperature | | 0°C to +50°C | | | | |
| Temperature Drift | | <5% | | | | < 4% |
| Output Connection | | Cable: PVC, 22 AWG, 2 m long | | | | |

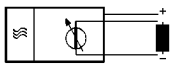


Analog Current Output

Courtesy of Steven Engineering, Inc. • 230 Ryan Way, South San Francisco, CA, 94080-6370 • Main Office: (650) 588-9200 • Outside Local Area: (800) 258-9200 • www.stevenengineering.com

Courtesy of Steven Engineering, Inc. • 230 Ryan Way, South San Francisco, CA, 94080-6370 • Main Office: (650) 588-9200 • Outside Local Area: (800) 258-9200 • www.stevenengineering.com

| Output Function | Linear, PNP 0-10V | T12-DL60-F | T12-DL10-F | T18-DL10-F | T30-DL60-F |
|---|---|---|---|---|---|
| **Linear Voltage Output**<br>Output voltage is proportional to the distance to target.<br> 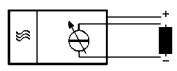 <br>Linear Voltage Output | | 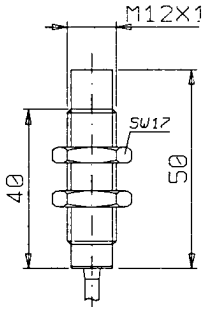 | 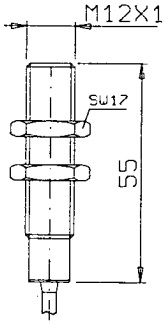 | 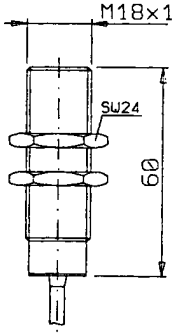 | 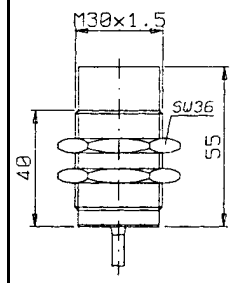 |
| External Diameter | | 12 mm | | 18 mm | 30 mm |
| Operating Distance | | 0.3 - 5.0 mm | 1.0 - 2.0 mm | 3.0 - 5.0 mm | 3.5 - 11 mm |
| Linearity Error | | < 3% | < 5% | | < 2% |
| Power Supply | | 17 - 30 VDC | | | |
| Power Drain | | < 22 mA | < 10 mA | | < 33 mA |
| Output Current | | 0 -10 V | 0.13 - 1.05 V | | 0 -10 V |
| Output Resistance | | 300 Ω | | | |
| Case | | Nickel-plated Brass | | | |
| Flush Mounting | | No | Yes | | No |
| Protection Degree | | IP 67 | | | |
| Operating Temperature | | 0° to +70°C | -10 to +60°C | | 0° to +60°C |
| Temperature Drift | | < 5% | <10% | | < 4% |
| Output Connection | | Cable: PVC, 22 AWG, 2 m long | | | |

Courtesy of Steven Engineering, Inc. • 230 Ryan Way, South San Francisco, CA, 94080-6370 • Main Office: (650) 588-9200 • Outside Local Area: (800) 258-9200 • www.stevenengineering.com

## Inductive Ring Sensors

Feature internal diameters of 5, 12, 22, 25, 30, 44, 63 and 100 mm. Adjustable sensitivity, LED function indicator and short circuit & reverse polarity protection are standard.
Most models available with pre-wired cable or connectors.
Environmenta protection is IP65: dust tight and protected against water jets. CE marked in conformity to 89/336 EEC and 73/23 ECC

**DESCRIPTION:**

In inductive ring sensors the sensing area is located inside the ring. These sensors are designed to detect metallic masses entering or passing through the ring. They are ideal for sensing, counting and checking of small metal part such as: screws, washes, nuts etc. and the control, detection, position, inspection and automation of machine tools & manufacturing systems
They operate on a 10-30 Vdc supply and offer NPN or PNP, complementary outputs. They are sealed in a rugged, plastic housing with a protection degree of IP 65. All versions have short circuit and reverse polarity protection and are available in both prewired cable or connector output connection. Special versions with retained output pulse of 100 msec and NAMUR output are available.

**OPERATING PRINCIPLE:**

The operating principle is based on a high frequency oscillator that creates an electromagnetic field in the close surroundings of the sensing surface. The presence of a metallic object (actuator) in the operating area causes a decrease of the oscillation amplitude. Part of the electromagnetic energy is transferred from the sensor to the actuator and is dissipated. The oscillation amplitude is then identified by a threshold circuit that changes the output state.
The operating distance of the sensor depends on the actuator shape and size and is strictly linked to the nature of the metal. For minimum target size see table 1.

### Ring Sensors - non flush mounting

| Output Connection | | Cable: PVC, 22 AWG, 2 m long | | | | | | |
|---|---|---|---|---|---|---|---|---|
| Output Function | NPN, Comp.* | **R05-D060-F** | **R12-D060-F** | **R22-D060-F** | **R30-D060-F** | **R44-D060-F** | **R63-D060-F** | **R100-D060-F** |
| | PNP, Comp. | **R05-D760-F** | **R12-D760-F** | **R22-D760-F** | **R30-D760-F** | **R44-D760-F** | **R63-D760-F** | **R100-D760-F** |
| Output Connection | | Connector | | | | | | |
| Output Function | NPN, NO | **R05-D363-F** | **R12-D363-F** | | | | | |
| | PNP, NO | **R05-D463-F** | **R12-D463-F** | | | | | |
| | NPN, NC | **R05-D563-F** | **R12-D563-F** | | | | | |
| | PNP, NC | **R05-D663-F** | **R12-D663-F** | | | | | |
| | NPN, Comp. | | | **R22-D068-F** | **R30-D068-F** | **R44-D068-F** | **R63-D068-F** | **R100-D068-F** |
| | PNP, Comp. | | | **R22-D768-F** | **R30-D768-F** | **R44-D768-F** | **R63-D768-F** | **R100-D768-F** |
| Hole Diameter | | 5.0 mm | 12 mm | 22 mm | 30 mm | 44 mm | 63 mm | 100 mm |
| Dimensions | | see dimesions on next page | | | | | | |
| Power Supply | | 10 - 30 VDC | | | | | | |
| Power Drain | | < 18 mA | | | | | | |
| Voltage Drop (on state) | | < 1.8 V | | | | | | |
| Switching Current (max) | | 200 mA max. | | | | | | |
| Short Circuit Protection | | Yes | | | | | | |
| Operating Frequency | | 600 - 1500 Hz | 600 - 1000 Hz | | 600 - 800 Hz | 250 - 600 Hz | 100 - 200 Hz | 100 Hz |
| Repeatability | | < 0.3 mm | | | | | | |
| Case | | Plastic | | | | | | |
| Flush Mounting | | No | | | | | | |
| Protection Degree | | IP 65 | | | | | | |
| Operating Temperature | | -25°C to +70°C | | | | | | |

### Ring Sensors - flush mounting

| Output Connection | | Cable: PVC, 22 AWG, 2 m long |
|---|---|---|
| Output Function | NPN, Comp.* | **R25-D010-F** |
| | PNP, Comp. | **R25-D710-F** |
| Output Connection | | Connector |
| Output Function | NPN, Comp. | **R25-D013-F** |
| | PNP, Comp. | **R25-D713-F** |
| Hole Diameter | | 5.0 mm |
| Dimensions | | see dimesions on next page |
| Power Supply | | 10 - 30 VDC |
| Power Drain | | < 18 mA |
| Voltage Drop (on state) | | < 1.8 V |
| Switching Current (max) | | 200 mA max. |
| Short Circuit Protection | | Yes |
| Operating Frequency | | 600 - 1000 Hz |
| Repeatability | | < 0.3 mm |
| Case | | Plastic |
| Flush Mounting | | Yes |
| Protection Degree | | IP 65 |
| Operating Temperature | | -25°C to +70°C |

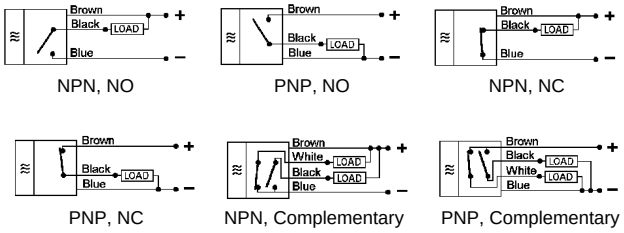


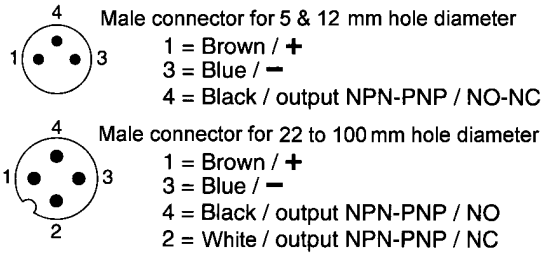

Courtesy of Steven Engineering, Inc. • 230 Ryan Way, South San Francisco, CA, 94080-6370 • Main Office: (650) 588-9200 • Outside Local Area: (800) 258-9200 • www.stevenengineering.com

Table 1

| Minumum Target Size (Iron) | | | | | | | |
|---|---|---|---|---|---|---|---|
| Model | R05 | R12 | R22 | R30 | R44 | R63 | R100 |
| Length mm | 1.0 | 2.0 | 6.0 | 7.0 | 9.0 | 12 | 20 |
| Diameter mm | 0.7 | 1.2 | 3.0 | 4.0 | 5.0 | 6.0 | 12 |

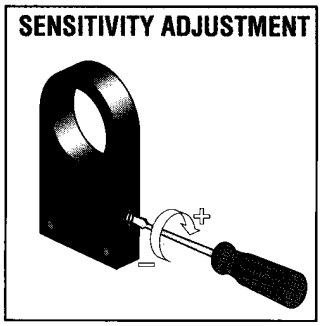


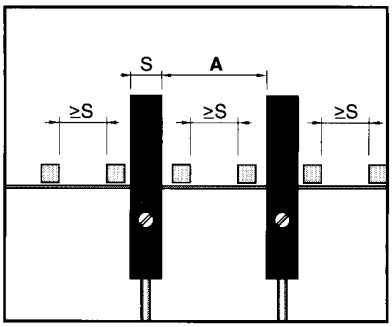


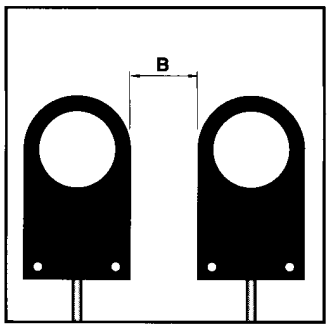


| TYPE | A (mm) | B (mm) |
|---|---|---|
| R05 | 25 | 10 |
| R12 | 30 | 10 |
| R22 | 60 | 20 |
| R30 | 60 | 20 |
| R44 | 300 | 250 |
| R63 | 300 | 250 |
| R100 | 600 | 650 |

SELECTION OF RING SENSOR : Select the minimum hole diameter required. This enables the sensitivity adjustment to be made within normal parameters ensuring proper functioning of the unit.

SENSITIVITY ADJUSTMENT : After selection of the ring sensor, it is recommended that the sensitivity adjustment be made while the sensor is installed in its final position, enabling any surrounding metal to be taken into account. Sensitivity increases by turning the trimmer clockwise and decreases by turbning it counter-clockwise.

EFFECTS OF METAL IN THE CLOSE VICINITY : Moving metal parts close to the sensing area can affect the performance of the sensor. In order to ensure proper functioning, mount the sensor away from metallic objects.

USE OF SENSOR : A distance equal to the width of the sensor should be left between each object that passes trhough the sensor. If more than one sensor is to be installed in close vicinity, the minimum distance indicated between the sensors should be observed.

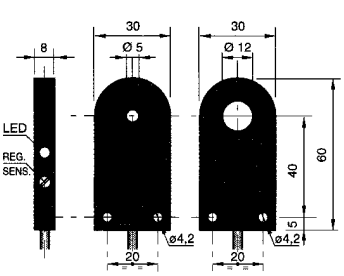


R05 R12

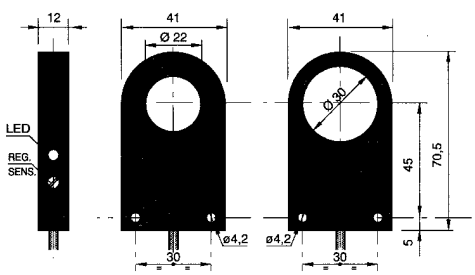


R22 R30

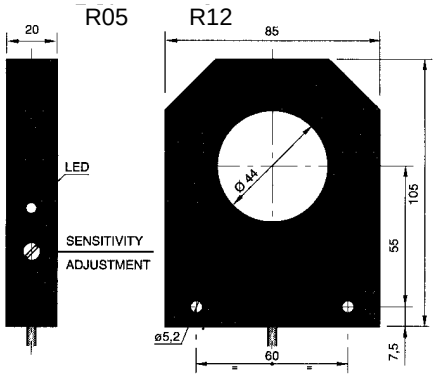


R44

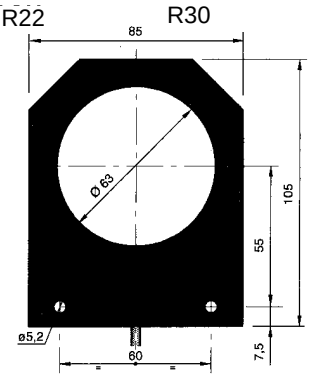


R63

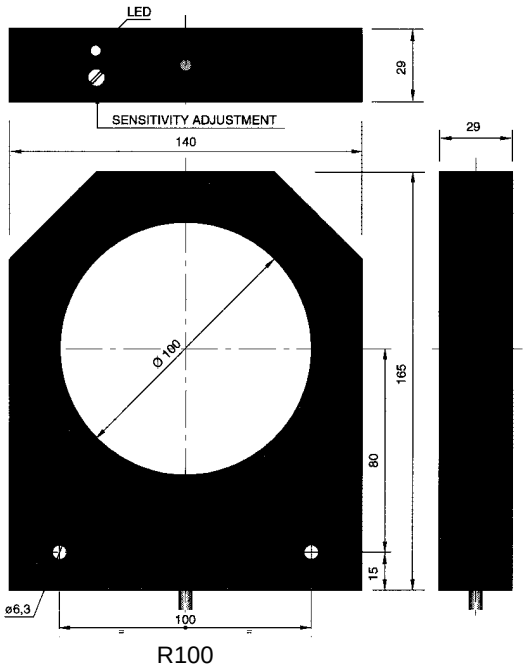


R100

| Output Function | Cable, PVC 22 AWG, 2 m / Connector | WT12-D410-F / WT12-D418-F | WT12-D460-F / WT12-D468-F | WT18-D410-F / WT18-D418-F | WT18-D460-F / WT18-D468-F |
|---|---|---|---|---|---|
| **Weld Immune DC** The main characteristic of this series is the immunity to noise induced by alternating magnetic fields. The magnetic flux density can reach 150 millitesla, equivalent to a 20 kA welding current flowing 2.5 cm from the sensor. LED function indicator. Short circuit and reverse polarity protection are standard. | | 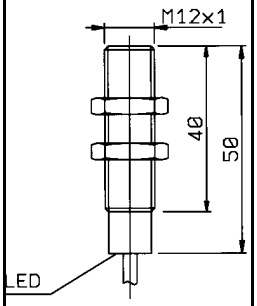 | 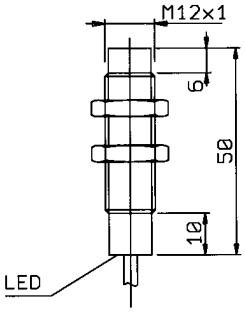 | 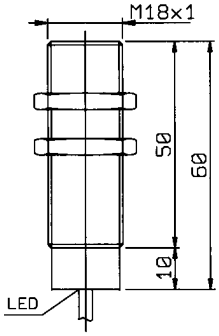 | 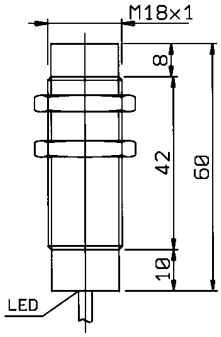 |
| External Diameter | | 12 mm | | 18 mm | |
| Operating Distance | | 2.0 mm | 4.0 mm | 5.0 mm | 8.0 mm |
| Output Function | | PNP, NO | | | |
| Power Supply | | 10 - 30 VDC | | | |
| Power Drain | | < 10 mA | | | |
| Voltage Drop (on state) | | < 2.4 V @ I max | | | |
| Switching Current (max) | | 200 mA max. | | | |
| Operating Frequency | | 15 Hz max. | | | |
| Case | | Teflon Plated Brass | | | |
| Flush Mounting | | Yes | No | Yes | No |
| Protection Degree | | IP 67 | | | |
| Operating Temperature | | -25°C to +70°C | | | |

| Output Function | Cable, PVC 22 AWG, 2 m / Connector | WT30-D410-F / WT30-D418-F | WT30-D460-F / WT30-D468-F |
|---|---|---|---|
| **Weld Immune DC** Continued 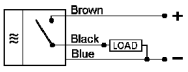 Three wire PNP, NO 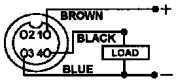 Connector | | 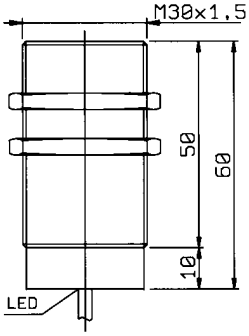 | 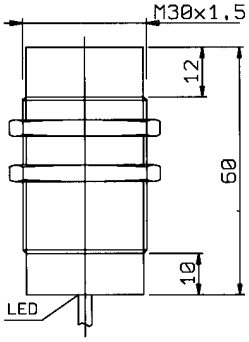 |
| External Diameter | | 30 mm | |
| Operating Distance | | 10 mm | 15 mm |
| Output Function | | PNP, NO | |
| Power Supply | | 10 - 30 VDC | |
| Power Drain | | < 10 mA | |
| Voltage Drop (on state) | | < 2.4 V @ I max | |
| Switching Current (max) | | 200 mA max. | |
| Operating Frequency | | 15 Hz max. | |
| Case | | Teflon Plated Brass | |
| Flush Mounting | | Yes | No |
| Protection Degree | | IP 67 | |
| Operating Temperature | | -25°C to +70°C | |

Courtesy of Steven Engineering, Inc. • 230 Ryan Way, South San Francisco, CA, 94080-6370 • Main Office: (650) 588-9200 • Outside Local Area: (800) 258-9200 • www.stevenengineering.com

Courtesy of Steven Engineering, Inc. • 230 Ryan Way, South San Francisco, CA, 94080-6370 • Main Office: (650) 588-9200 • Outside Local Area: (800) 258-9200 • www.stevenengineering.com

| 2m cable | T06-DN10-F | T06-DN60-F | T08-DN10-F | T08-DN60-F | T12-DN10-F | T12-DN60-F |
|---|---|---|---|---|---|---|
| Connector | T06-DN13-F | T06-DN63-F | T08-DN18-F | T08-DN68-F | T12-DN18-F | T12-DN68-F |

**NAMUR Output**
NAMUR inductive sensors can be used for sensing or distance measurement even in dangerous explosive environments. These sensors change resistance when the target is present. See page 28 for amplifiers

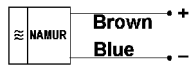

NAMUR

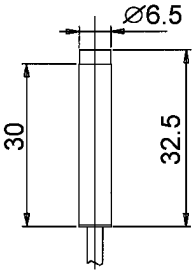

Add 9.0 mm to length for connector version

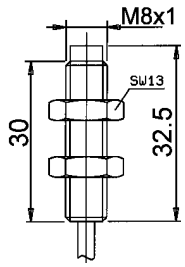

Add 20 mm to length for connector version

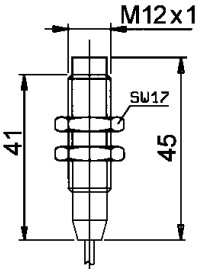

Add 4.0 mm to length for connector version

| | | | | | | |
|---|---|---|---|---|---|---|
| External Diameter | 6.5 mm | | 8.0 mm | | 12 mm | |
| Operating Distance | 1.0 mm | 2.0 mm | 1.0 mm | 2.0 mm | 2.0 mm | 4.0 mm |
| Power Supply | 5 - 24 VDC | | | | | |
| Operating Frequency | 2.0 kHz | | | | | |
| Repeatability | <0.01 mm | | | | | |
| Case | Nickel Plated Brass | | | | | |
| Flush Mounting | Yes | No | Yes | No | Yes | No |
| Protection Degree | IP-67 | | | | | |
| Operating Temperature | -25°C to +70°C | | | | | |

| 2m cable | T18-DN10-F | T18-DN60-F | T30-DN10-F | T30-DN60-F |
|---|---|---|---|---|
| Connector | T18-DN18-F | T18-DN68-F | T30-DN18-F | T30-DN68-F |

**NAMUR Output**
Continued.

Connector Versions

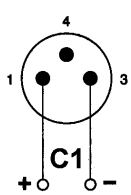

6.5 mm only

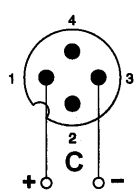

8.0 mm to 30 mm

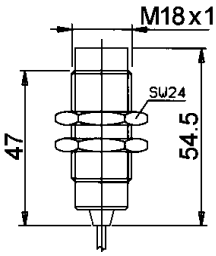

Add 4.0 mm to length for connector version

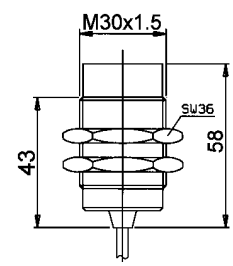

Add 8.0 mm to length for connector version

| | | | | |
|---|---|---|---|---|
| External Diameter | 18.0 mm | | 30 mm | |
| Operating Distance | 5.0 mm | 8.0 mm | 10 mm | 15 mm |
| Power Supply | 5 - 24 VDC | | | |
| Operating Frequency | 5.0 mm | | 500 Hz | |
| Repeatability | | | < 0.05 mm | |
| Case | | | Nickel Plated Brass | |
| Flush Mounting | Yes (see mounting) | | | |
| Protection Degree | IP-67 | | | |
| Operating Temperature | -25°C to +70°C | | | |

**Mounting:**
Totally shielded models can be embedded in metal for flush mounting, for side by side refer to figure 1a. Partially shielded can be mounted according to Figure 1b. For side by side refer to figure 1c.
Sn = operating distance.

Fig. 1a

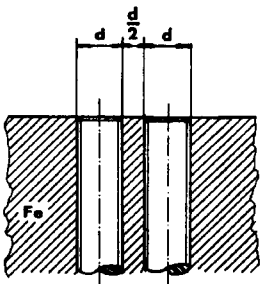


Fig. 1b

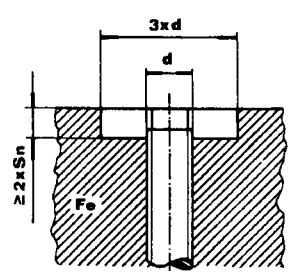


Fig. 1c

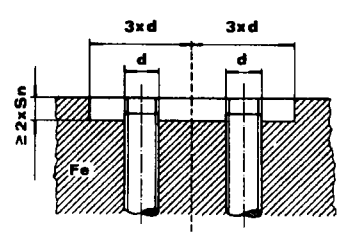

| Output Function | NO | T12-A110-F | T12-A160-F | T12-A118-F | T12-A168-F |
|---|---|---|---|---|---|
| | NC | T12-A210-F | T12-A260-F | T12-A218-F | T12-A268-F |

## 12 mm Diameter AC

These two wire AC inductive proximity sensors meet EN 500036 - EN 500044 standard and feature a wide supply range of 20-250 VAC. All models available with cable or connector output connections, LED function indicator and meet the CE EMC directive.

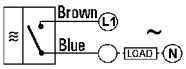


NO output

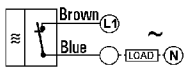


NC output

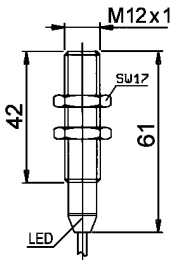


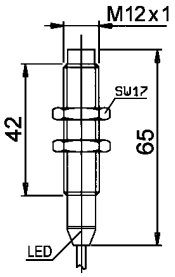


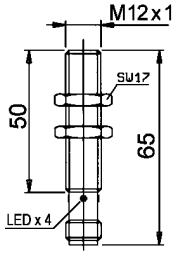


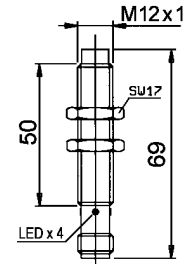


| | | | | |
|---|---|---|---|---|
| Operating Distance | 2.0 mm | 4.0 mm | 2.0 mm | 4.0 mm |
| Power Supply | 20 - 250 VAC | | | |
| Max. Switching Current | 300 mA | | | |
| Min Switching Current | 20 mA | | | |
| Leakage Current | < 2.5 mA | | | |
| Voltage Drop (on state) | < 6.0 V | | | |
| Max. In-rush - 20 msec. | 1.5 A | | | |
| Operating Frequency | 12 Hz | | | |
| Repeatability | < 0.2 mm | | | |
| Case | Nickel Plated Brass | | | |
| Flush Mounting | Yes | No | Yes | No |
| Protection Degree | IP 67 | | | |
| Operating Temperature | -25°C to +70°C | | | |
| Output Connection | Cable: PVC, 22 AWG, 2 m long | | Connector | |

| Output Function | NO | PT12-A160-F |
|---|---|---|

## 12 mm Diameter AC Plastic Body

This water resistant and dust-tight AC sensor is suited for all type of applications from food and chemical processing to packaging and industrial machinery .

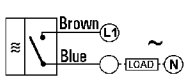


NO output

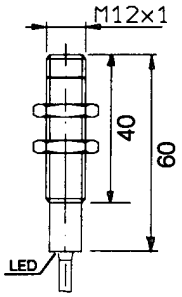


| | |
|---|---|
| Operating Distance | 4.0 mm |
| Power Supply | 40 - 250 VAC |
| Power Drain | 3.5 mA |
| Maximum Load | 180 mA max. |
| Operating Frequency | 50 Hz |
| Case | Plastic (Polybutylene Terephthalate) |
| Flush Mounting | No |
| Protection Degree | IP 67 |
| Operating Temperature | -25°C to +70°C |
| Output Connection | Cable: PVC, 22 AWG, 2 m long |

Courtesy of Steven Engineering, Inc. • 230 Ryan Way, South San Francisco, CA, 94080-6370 • Main Office: (650) 588-9200 • Outside Local Area: (800) 258-9200 • www.stevenengineering.com

Courtesy of Steven Engineering, Inc. • 230 Ryan Way, South San Francisco, CA, 94080-6370 • Main Office: (650) 588-9200 • Outside Local Area: (800) 258-9200 • www.stevenengineering.com

| Output Function | NO | T18-A110-F | T18-A160-F | T18-A118-F | T18-A168-F |
|---|---|---|---|---|---|
| | NC | T18-A210-F | T18-A260-F | T18-A218-F | T18-A268-F |

**18 mm Diameter AC**

These two wire AC inductive proximity sensors meet EN 500036 - EN 500044 standard and feature a wide supply range of 20-250 VAC. All models available with cable or connector output connections, LED function indicator and meet the CE EMC directive.

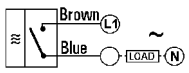


NO output

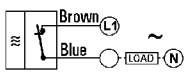


NC output

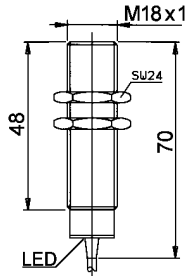


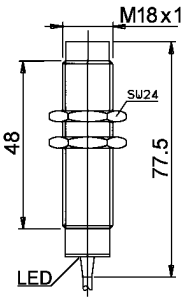


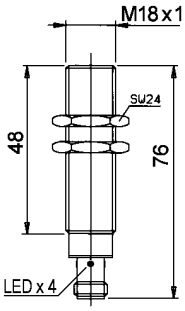


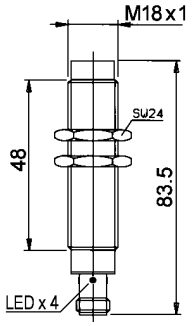


| | | | | |
|---|---|---|---|---|
| Operating Distance | 10 mm | 15 mm | 5.0 mm | 8.0 mm |
| Power Supply | 20 - 250 VAC | | | |
| Max. Switching Current | 300 mA | | | |
| Min Switching Current | 20 mA | | | |
| Leakage Current | < 2.5 mA | | | |
| Voltage Drop (on state) | < 6.0 V | | | |
| Max. In-rush - 20 msec. | 1.5 A | | | |
| Operating Frequency | 12 Hz | | | |
| Repeatability | < 0.2 mm | | | |
| Case | Nickel Plated Brass | | | |
| Flush Mounting | Yes | No | Yes | No |
| Protection Degree | IP 67 | | | |
| Operating Temperature | -25°C to +70°C | | | |
| Output Connection | Cable: PVC, 22 AWG, 2 m long | | Connector | |

| Output Function | NO | T30-A110-F | T30-A160-F | T30-A118-F | T30-A168-F |
|---|---|---|---|---|---|
| | NC | T30-A210-F | T30-A260-F | T30-A218-F | T30-A268-F |

**30 mm Diameter AC**

These two wire AC inductive proximity sensors meet EN 500036 - EN 500044 standard and feature a wide supply range of 20-250 VAC. All models available with cable or connector output connections, LED function indicator and meet the CE EMC directive.

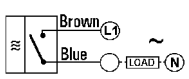


NO output

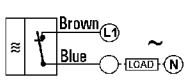


NC output

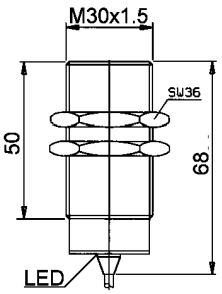


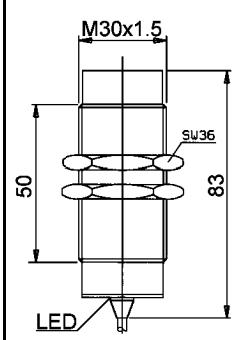


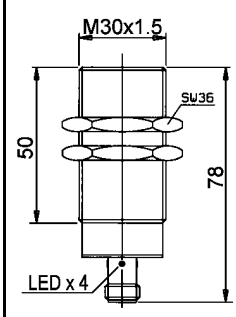


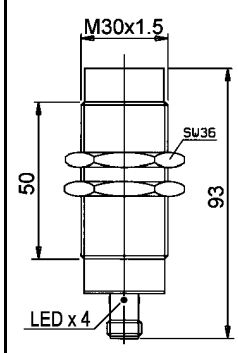


| | | | | |
|---|---|---|---|---|
| Operating Distance | 10 mm | 15 mm | 10 mm | 15 mm |
| Power Supply | 20 - 250 VAC | | | |
| Max. Switching Current | 300 mA | | | |
| Min Switching Current | 20 mA | | | |
| Leakage Current | < 2.5 mA | | | |
| Voltage Drop (on state) | < 6.0 V | | | |
| Max. In-rush - 20 msec. | 1.5 A | | | |
| Operating Frequency | 12 Hz | | | |
| Repeatability | < 0.3 mm | | | |
| Case | Nickel Plated Brass | | | |
| Flush Mounting | Yes | No | Yes | No |
| Protection Degree | IP 67 | | | |
| Operating Temperature | -25°C to +70°C | | | |
| Output Connection | Cable: PVC, 22 AWG, 2 m long | | Connector | |

| Output Function | NO/NC Selectable | L40-AP10-F | L40-AP0-F |
|---|---|---|---|

## Limit Switch Style

Sensing head can be oriented in 5 different directions. Two wire switch selectable output. LED status indicator on all models. Compliant with CE EMC directive.

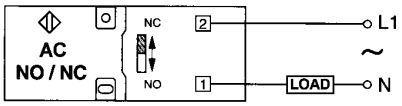


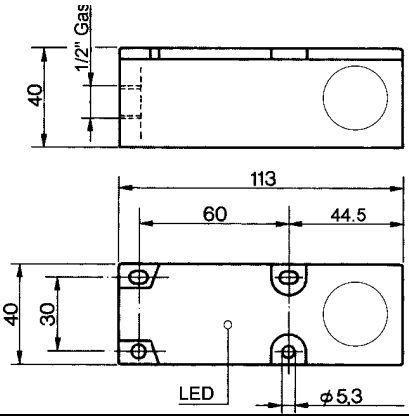


| | | |
|---|---|---|
| Operating Distance | 15 mm | 20 mm |
| Power Supply | 20 to 250 VAC | |
| Leakage Current | <1.5 mA | |
| Voltage Drop | < 6.0 V | |
| Switching Current (max) | 300 mA | |
| Switching Current (min) | 15 mA | |
| In-rush Current <20 msec | 1.5A | |
| Operating Frequency | 12 Hz | |
| Repeatability | < 0.3 mm | |
| Case | Plastic | |
| Flush Mounting | Yes | No |
| Protection Degree | IP 65 | |
| Operating Temperature | -25 to 70°C | |
| Output Connection | Terminal Block | |

For AC/DC universal power supply models see page 12.

| Model Number | L80-AP64-F |
|---|---|

## Block Shaped Case

Adjustable operating distance up to 60 mm. Two wire connection with switch selectable NO or NC output. LED indicators and compliance with the CE EMC directive.

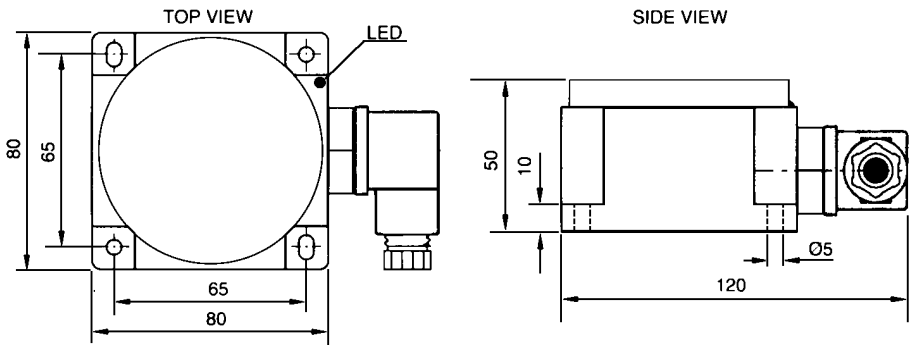


| | |
|---|---|
| Operating Distance | 10 - 60 mm |
| Power Supply | 20 to 250 VAC |
| Leakage Current | <1.5 mA |
| Voltage Drop | < 6.0 V |
| Switching Current (max) | 300 mA |
| Switching Current (min) | 15 mA |
| In-rush Current <20 msec | 1.5A |
| Operating Frequency | 12 Hz |
| Repeatability | < 0.3 mm |
| Case | Plastic |
| Flush Mounting | No |
| Protection Degree | IP 65 |
| Operating Temperature | -25 to 70°C |
| Output Connection | Conector (included with sensor) |

See DC supply models and connector configuration on page 13.

Courtesy of Steven Engineering, Inc. • 230 Ryan Way, South San Francisco, CA, 94080-6370 • Main Office: (650) 588-9200 • Outside Local Area: (800) 258-9200 • www.stevenengineering.com

| Output Function | NO | L12-A110-F | L12-A160-F |
|---|---|---|---|
| | NC | L12-A610-F | L12-A660-F |

**Rectangular**
Universal AC supply, available with NO or NC outputs. IP67 protection and compliant with the CE EMC directive.

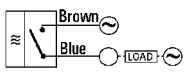

NO

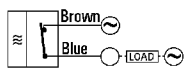

NC

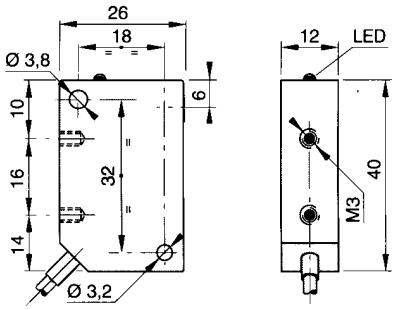


| | | |
|---|---|---|
| Operating Distance | 2.0 mm | 4.0 mm |
| Power Supply | 20 to 250 VAC | |
| Leakage Current | <1.5 mA | |
| Voltage Drop (on state) | < 6.0 V | |
| Switching Current (max) | 300 mA | |
| Switching Current (min) | 15 mA | |
| In-rush Current < 20 msec | 1.5A | |
| Operating Frequency | 12 Hz | |
| Repeatability | <0.2 mm | |
| Case | Plastic | |
| Flush Mounting | Yes | No |
| Protection Degree | IP 67 | |
| LED State Indicator | Yes | |
| Operating Temperature | -25°C to +70°C | |
| Output Connection | Cable PVC: L = 2m | |

Courtesy of Steven Engineering, Inc. • 230 Ryan Way, South San Francisco, CA, 94080-6370 • Main Office: (650) 588-9200 • Outside Local Area: (800) 258-9200 • www.stevenengineering.com

| Output Connection and Function | | | | | |
|---|---|---|---|---|---|
| | NO, Cable, 2 m | **WT12-A110-F** | **WT12-A160-F** | **WT18-A110-F** | **WT18-A160-F** |
| | NC, Cable, 2 m | **WT12-A210-F** | **WT12-A260-F** | **WT18-A210-F** | **WT18-A260-F** |
| | NO, Connector | **WT12-A1110-F** | **WT12-A1610-F** | **WT18-A1110-F** | **WT18-A1610-F** |
| | NC, Connector | **WT12-A2110-F** | **WT12-A2610-F** | **WT18-A2110-F** | **WT18-A2610-F** |

**Weld Immune AC**

The main characteristic of this series is the immunity to noise induced by alternating magnetic fields. The magnetic flux density can reach 150 millitesla, equivalent to a 20 kA welding current flowing 2.5 cm from the sensor. LED function indicator. Short circuit and reverse polarity protection are standard.

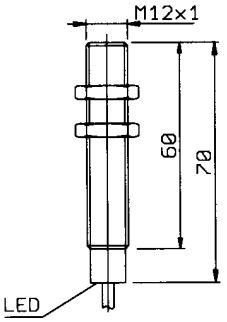


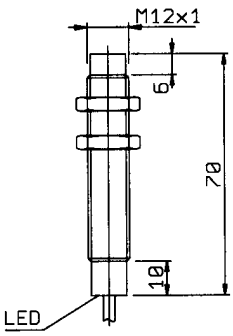


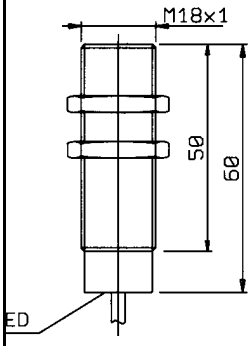


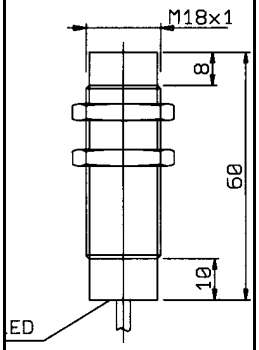


| | | | | |
|---|---|---|---|---|
| External Diameter | 12 mm | | 18 mm | |
| Operating Distance | 2.0 mm | 4.0 mm | 5.0 mm | 8.0 mm |
| Power Supply | 20 - 250 VAC | | | |
| Power Drain | < 2.0 mA | | | |
| Voltage Drop (on state) | < 5.0 V @ I max | | | |
| Switching Current (max) | 300 mA | | 500 mA | |
| Operating Frequency | 15 Hz max. | | | |
| Case | Teflon Plated Brass | | | |
| Flush Mounting | Yes | No | Yes | No |
| Protection Degree | IP 67 | | | |
| Operating Temperature | -25°C to +70°C | | | |

| Output Connection and Function | | | |
|---|---|---|---|
| | NO, Cable, 2 m | **WT30-A110-F** | **WT30-A160-F** |
| | NC, Cable, 2 m | **WT30-A210-F** | **WT30-A260-F** |
| | NO, Connector | **WT30-A1110-F** | **WT30-A1610-F** |
| | NC, Connector | **WT30-A2110-F** | **WT30-A2610-F** |

**Weld Immune AC**

Continued

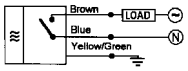


NO with ground

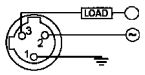


Connector

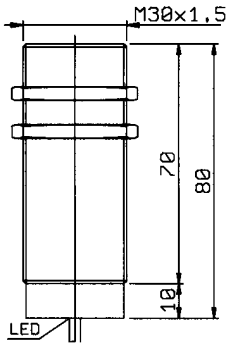


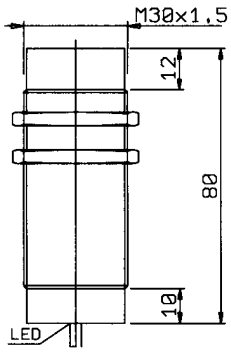


| | | |
|---|---|---|
| External Diameter | 30 mm | |
| Operating Distance | 10 mm | 15 mm |
| Power Supply | 20 - 250 VAC | |
| Power Drain | < 2.0 mA | |
| Voltage Drop (on state) | < 5.0 V @ I max | |
| Switching Current (max) | 300 mA | 500 mA |
| Operating Frequency | 15 Hz max. | |
| Case | Teflon Plated Brass | |
| Flush Mounting | Yes | No |
| Protection Degree | IP 67 | |
| Operating Temperature | -25°C to +70°C | |

Courtesy of Steven Engineering, Inc. • 230 Ryan Way, South San Francisco, CA, 94080-6370 • Main Office: (650) 588-9200 • Outside Local Area: (800) 258-9200 • www.stevenengineering.com

Courtesy of Steven Engineering, Inc. • 230 Ryan Way, South San Francisco, CA, 94080-6370 • Main Office: (650) 588-9200 • Outside Local Area: (800) 258-9200 • www.stevenengineering.com

## Capacitive Sensors

Capacitive sensors can be used to sense both metallic and non-metallic objects (liquid, plastic or wood). They are available in either metal or plastic cylindrical threaded housings. These sensors are dust and water tight as well as shock and vibration resistant. All models feature LED indication of output status and short circuit protection. Both cable and connector versions are offered, a protective housing simplifies installation in tank applications. A screw on the back of the sensor allows adjustment of the operating distance. This adjustment in applications such as sensing weather a container is filled or empty. All models compliant with the CE EMC directive.

| Output Function | | | | |
|---|---|---|---|---|
| | NPN, NO | **CT18-D310-F** | | |
| | PNP, NO | **CT18-D410-F** | | |
| | NPN, Complementary | | **CT18-D010-F** | **CP18-D060-F** |
| | PNP, Complementary | | **CT18-D710-F** | **CP18-D760-F** |

### DC Capacitive 18 mm

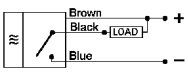

NPN, NO

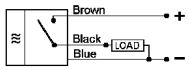

PNP, NO

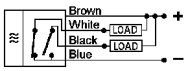

NPN, Complementary

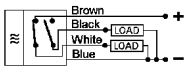

PNP, Complementary

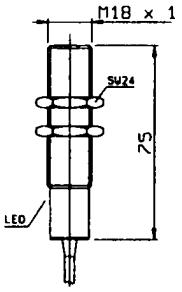


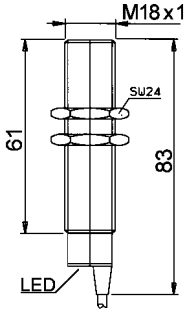


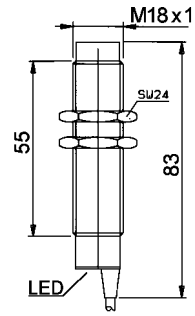


| | | | |
|---|---|---|---|
| Operating Distance | 3.0 - 8.0 mm | 0 - 5.0 mm | 0 - 10 mm |
| Power Supply | 10 - 30 VDC | | |
| Power Drain | < 5.0 mA | < 10 mA | < 5.0 mA |
| Voltage Drop (on state) | < 3.0 V | < 1.8 V | < 3.0 V |
| Switching Current (max) | 150 mA | 200 mA | 150 mA |
| Operating Frequency | 200 Hz | 10 Hz | 100 Hz |
| Case | Nickel Plated Brass | | Plastic |
| Flush Mounting | Yes | | No |
| Protection Degree | IP 65 | | |
| Operating Temperature | -10° to +60°C | -20° to +70°C | -10° to +60°C |
| Output Connection | Cable: PVC, 22 AWG, 2 m long | | |

| Output Function | | | | | |
|---|---|---|---|---|---|
| | NPN, Complementary | **CT30-D010-F** | **CP30-D060-F** | **CP30-D064-F** | **CP40-D060-F** |
| | PNP, Complementary | **CT30-D710-F** | **CP30-D760-F** | **CP30-D764-F** | **CP40-D760-F** |

### DC Capacitive 30 mm & 40 mm

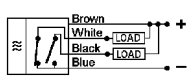

NPN, Complementary

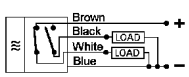

PNP, Complementary

Mating connector with screw terminals included with models so equipped.

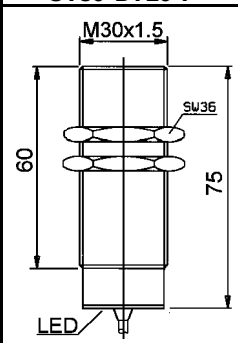


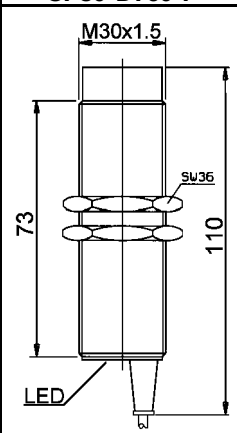


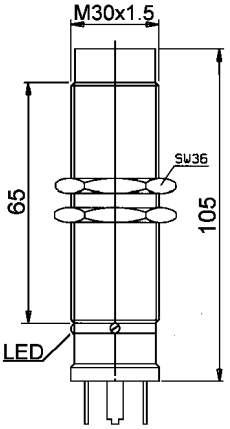


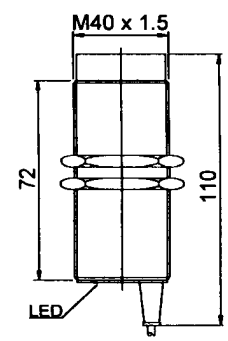


| | | | | |
|---|---|---|---|---|
| External Diameter | 30 mm | | | 40 mm |
| Operating Distance | 3.0 - 15 mm | 0 - 25 mm | | 0 - 35 mm |
| Power Supply | 10 - 30 VDC | 10 - 55 VDC | | |
| Power Drain | < 5.0 mA | ≤ 10 mA | | < 10 mA |
| Voltage Drop (on state) | < 3.0 V | < 1.8 V | | |
| Switching Current (max) | 150 mA | 300 mA | | 200 mA |
| Operating Frequency | 100 Hz | 10 Hz | | |
| Case | Nickel Plated Brass | Plastic | | |
| Flush Mounting | Yes | No | | |
| Protection Degree | IP 65 | IP 67 | IP 65 | IP 67 |
| Operating Temperature | -10° to +60°C | -20° to +70°C | | |
| Output Connection | Cable: PVC, 2 m | | Connector (included) | Cable: PVC, 2 m |

# Capacitive Proximity Sensors

| Output Function | | | | | |
|---|---|---|---|---|---|
| | NO | **CT30-A110-F** | | | **CP40-A160-F** |
| | NC | **CT30-A210-F** | | | **CP40-A260-F** |
| | NO/NC selectable | | **CT30-AP14-F** | **CP30-AP64-F** | |

**AC/DC Two Wire Capacitive 30 mm & 40 mm**
Two wire sensors can reduce stock requirements and simplify installation. A separate power supply is not required

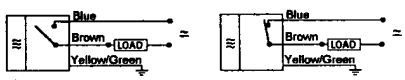


NO NC

Mating connector with screw terminals included with models so equipped.

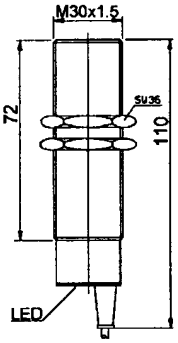


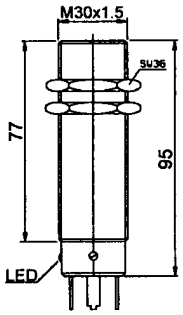


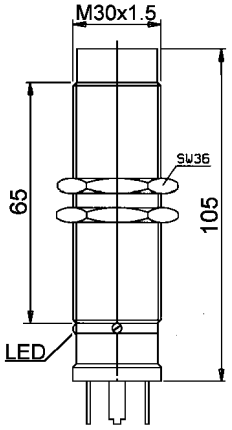


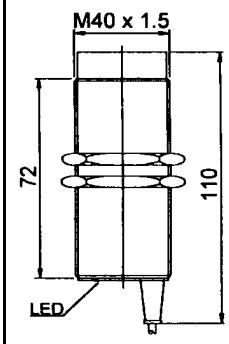


| | | | | |
|---|---|---|---|---|
| External Diameter | 30 mm | | | 40 mm |
| Operating Distance | 0 - 20 mm | | 0 - 25 mm | 0 - 35 mm |
| Power Supply | 20 - 250 VAC/DC | | | |
| Max. Switching Current | 500 mA | | | |
| Min. Switching Current | 10 mA | | | |
| Leakage Current | ≤ 2.0 mA | | | |
| Voltage Drop (on state) | < 6 V | | | |
| Short Circuit Protection | Yes (up to 50V in DC) | | | |
| Operating Frequency | 10 Hz | | | |
| Case | Nickel Plated Brass | | Plastic | |
| Flush Mounting | Yes | | No | |
| Protection Degree | IP 67 | IP 65 | | IP 67 |
| Operating Temperature | -20° to +70°C | | | |
| Output Connection | Cable: PVC, 2 m | Connector (included) | | Cable: PVC, 2 m |

AC/DC two wire application considerations:
- The minimum load current required to operate the load must > the min. switching current of the sensor
- The leakage current of the sensor must not be sufficient to activate the load.
- Take 'on-state' voltage into consideration on low volatge supplies.

Protective housing for 30 mm sensors, allows sensor replacement without draining tank.
For connector models : RP-590
For cable models : RP-591

Connector configuration, a connector is included with sensor.
Replacement connector available as RP-495

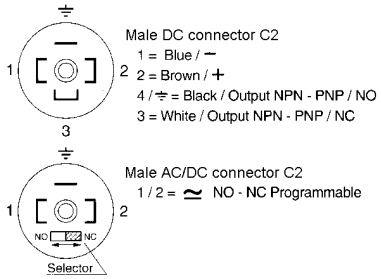


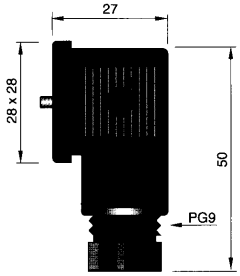


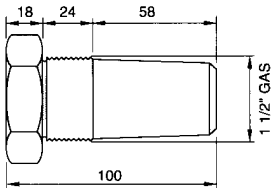


Protective housing for 40 mm sensors.
For cable models only : RP-592

| Relative Sensing Distance | |
|---|---|
| Metal | ≅ 1 x Sn |
| Water | ≅ 1 x Sn |
| Plastic | ≅ 0.5 x Sn |
| Glass | ≅ 0.5 x Sn |
| Wood | ≅ 0.4 x Sn |

Sensitivity with different actuator materials.
Sn = operating distance

Courtesy of Steven Engineering, Inc. • 230 Ryan Way, South San Francisco, CA, 94080-6370 • Main Office: (650) 588-9200 • Outside Local Area: (800) 258-9200 • www.stevenengineering.com

Courtesy of Steven Engineering, Inc. • 230 Ryan Way, South San Francisco, CA, 94080-6370 • Main Office: (650) 588-9200 • Outside Local Area: (800) 258-9200 • www.stevenengineering.com

**Photoelectric Sensors**

These high quality and durable optical sensors are available in four types. Direct Reflection: The emitter and receiver are located in the same housing. The detection of an object is obtained by the reflection of the inffared light off of the object. In the use of photocells it is important to note that the color and type of surface can effect the operating distance. The operating distance in the technical data is related to matt white paper. Reflection with Reflector: The emitter and receiver are located in the same housing. The reflection of the light emitted is obtained by using one or more reflectors and the detection of the object occurs when these rays are interrupted. This type offers a greater operating distance then the direct reflection type.

Polarized Reflection with Reflector: Similar to reflection with reflector except that this type uses a polarized band of light. A polarized band of light offers a more secure readings even when the object has a very shiny surface and they are not affected by random reflections. Thru Beam: In this type the emitter and receiver are in separate housing and must face each other. Detection achieved when object interrupts the light beam between the emitter and receiver. This type offers the greatest operating distance. All models available with cables or conectors, are short circuit protected and compliant with the CE EMC directive.

## Direct Reflection

| Model Number | Cable | OT18M-CP2-F | OT18M-CP4-F | OT18-AP2-F | OT18-AP4-F |
|---|---|---|---|---|---|
| | Connector | OT18M-CP2H-F | OT18M-CP4H-F | OT18-AP2H-F | OT18-AP4H-F |
| Operating Distance | | 200 mm | 400 mm | 200 mm | 400 mm |
| Power Supply | | 10 - 30 VDC | | 20 - 250 VAC | |
| Power Drain | | ≤50 mA | | ≤10 mA | |
| Output Current | | 200 mA | | 300 mA | |
| Ouput Function | | NPN/PNP Complementary | | NO/NC | |
| Voltage Drop (on state) | | ≤ 3.0 V | | ≤1.5 V | |
| Short Circuit Protection | | Yes | | No | |
| Light Source | | Infrared | | Infrared | |
| Operating Frequency | | 700 Hz | | 15 Hz | |
| Case | | Stainless Steel | | Plastic, gray makrolon | |
| Flush Mounting | | > 10.000 Lux | | | |
| Protection Degree | | IP 67 | | | |
| Operating Temperature | | -20°C to +50°C | | | |

Operating distance based on matt white paper dim. 10 x 10 cm.

## Reflector Types

| Model Number | Cable | OT18M-CR-F | OT18M-CAR-F | OT18-AR-F | OT18-AAR-F |
|---|---|---|---|---|---|
| | Connector | OT18M-CRH-F | OT18M-CARH-F | OT18-ARH-F | OT18-AARH-F |
| Operating Distance | | 2500 mm | 1000 mm | 2500 mm | 1000 mm |
| Power Supply | | 10 - 30 VDC | | 20 - 250 VAC | |
| Power Drain | | ≤20 mA | | ≤10 mA | |
| Output Current | | 200 mA | | 300 mA | |
| Ouput Function | | NPN/PNP Complementary | | NO/NC | |
| Voltage Drop (on state) | | ≤ 3.0 V | | ≤1.5 V | |
| Short Circuit Protection | | Yes | | No | |
| Light Source | | Infared | Red | Infared | Red |
| Operating Frequency | | 700 Hz | | 15 Hz | |
| Case | | Stainless Steel | | Plastic, gray makrolon | |
| Flush Mounting | | > 10.000 Lux | | | |
| Protection Degree | | IP 67 | | | |
| Operating Temperature | | -20°C to +50°C | | | |

Operating distance based on RP-452 reflector. See Page 43 for reflectors

**CONNECTION WITH PLUG**

VIEW OF MALE CONNECTOR

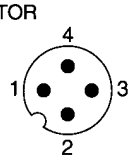


**2 WIRINGS (EMITTER)**
1 = Brown / +
3 = Blue / –

**4 WIRINGS**
1 = Brown / +
3 = Blue / –
4 = Black / output NO
2 = White / output NC

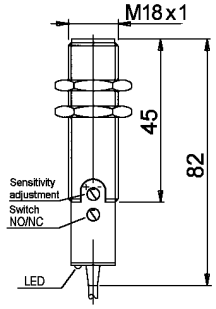


**INSTRUCTIONS FOR THE PROGRAMMING AND ADJUSTMENT**

TRIMMER FOR THE SENSING RANGE ADJUSTMENT: The photocell is supplied with max sensing range with the trimmer totally rotated in the clockwise direction. The sensitivity reduces by rotating the trimmer in the counterclockwise direction.

SWITCH NPN/PNP: The photocell is supplied with the switch in P (PNP output). To change to NPN turn the switch to N in the counterclockwise direction. WARNING! Do not change switch while power is applied.

GREEN LED - STABILITY INDICATOR: This LED is on when the level of the output signal and the alignment of the photoelectric sensors are in the optimum position. In the case that the LED is off this indicates that the lens is obscured or for the types with direct reflection a possible alteration of the dimension or color of the object to be detected.

YELLOW LED - OPERATION INDICATOR: This LED is on when the object to be detected enters the sensing range of the photocell giving output signals. NOTE! The unit must be programmed for the required NPN or PNP function before applying power.

Courtesy of Steven Engineering, Inc. • 230 Ryan Way, South San Francisco, CA, 94080-6370 • Main Office: (650) 588-9200 • Outside Local Area: (800) 258-9200 • www.stevenengineering.com

## Thru Beam Types

| Model Number | | Emitter | Detector | Emitter | Detector |
|---|---|---|---|---|---|
| | Cable | **OT18M-CBE-F** | **OT18M-CBR-F** | **OT18-ABE-F** | **OT18-ABR-F** |
| | Connector | **OT18M-CBEH-F** | **OT18M-CBRH-F** | **OT18-ABEH-F** | **OT18-ABRH-F** |
| Operating Distance | | 15 m | | | |
| Power Supply | | 10 - 30 VDC | | 20 - 250 VAC | |
| Power Drain | | ≤35 mA | | ≤10 mA | |
| Output Current | | 200 mA | | 300 mA | |
| Ouput Function | | NPN/PNP Complementary | | NO/NC | |
| Voltage Drop (on state) | | ≤ 3.0 V | | ≤1.5 V | |
| Short Circuit Protection | | Yes | | No | |
| Light Source | | Infrared | | Infrared | |
| Operating Frequency | | 700 Hz | | 15 Hz | |
| Case | | Stainless Steel | | Plastic, gray makrolon | |
| Flush Mounting | | > 10.000 Lux | | | |
| Protection Degree | | IP 67 | | | |
| Operating Temperature | | -20°C to +50°C | | | |

**WIRING DIAGRAMS**

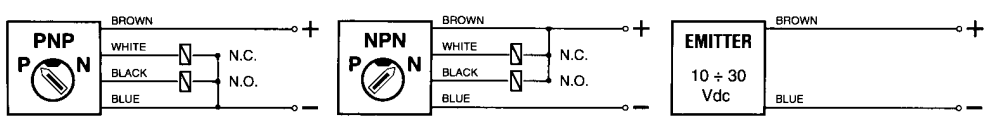


## Radiation patterns

**OT18M-CP2-F and OT18-AP2-F**

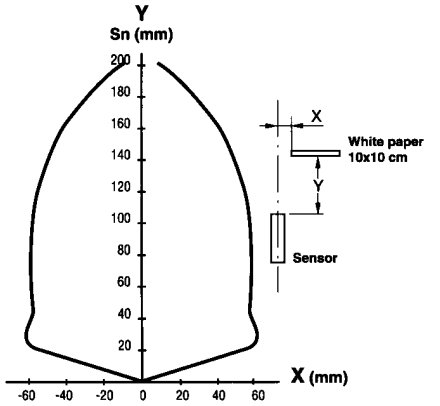


**OT18M-CP4-F and OT18-AP4-F**

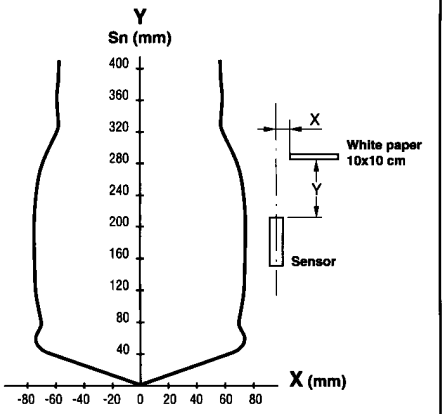


**OT18M-CR-F**

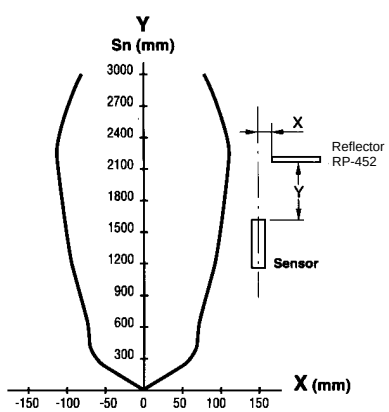


**OT18-AR-F**

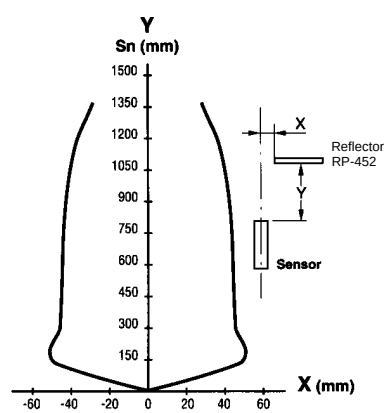


**OT18M-CBR-F/OT18M-CBE-F**

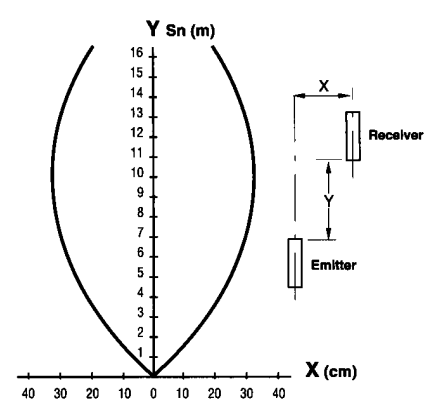

| | | |
|---|---|---|
| Output Function | NPN, NO | **TMS-D102** |
| | PNP, NO | **TMS-D104** |
| | NPN, NC | **TMS-D101** |
| | PNP, NC | **TMS-D103** |

**9.5 mm (0.375”) Diameter**
Unthreaded body with cable.

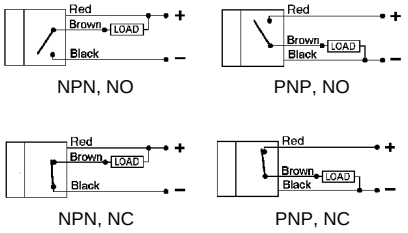


NPN, NO PNP, NO

NPN, NC PNP, NC

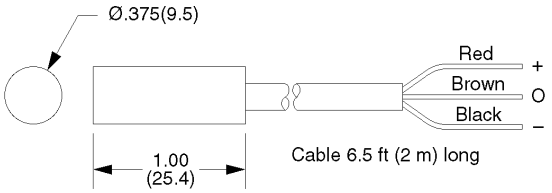


| | |
|---|---|
| Operating Distance | 25.4 mm (1.0”) |
| Power Supply | 9 - 26 VDC |
| Power Drain | ≤ 20 mA @ 24 VDC |
| Voltage Drop (on state) | ≤ 2.0 V |
| Switching Current (max) | 100 mA max. |
| Short Circuit Protection | No |
| Field Strength to Activate | 30 Gauss |
| Operating Frequency | 50 kHz max. (resistive) |
| Case | Diallyl Phthalate |
| Flush Mounting | Yes |
| Protection Degree | IP 67 |
| Operating Temperature | -40°C to +85°C |
| Output Connection | Cable: PVC, 24 AWG, 2 m long |

Courtesy of Steven Engineering, Inc. • 230 Ryan Way, South San Francisco, CA, 94080-6370 • Main Office: (650) 588-9200 • Outside Local Area: (800) 258-9200 • www.stevenengineering.com

Courtesy of Steven Engineering, Inc. • 230 Ryan Way, South San Francisco, CA, 94080-6370 • Main Office: (650) 588-9200 • Outside Local Area: (800) 258-9200 • www.stevenengineering.com

## Power Supply/Amplifiers RP-490 and RP-491

**Specifications**

These instruments are made up of a transformer, an amplifier, a rectifying circuit and one or two double pole output relays, respectively in the RP-490 and RP-491 types.

They are used to supply with a stabilized 12 VDC to inductive and capacitive sensors and photocells. The electronics of the two models is assembled in a plastic housing with an 11 pin plug-in base.

The RP-490 model is very versatile as it permits the use of a sensor with NPN, PNP or NAMUR logic.
The RP-491 type allows for the use of two NAMUR sensors.

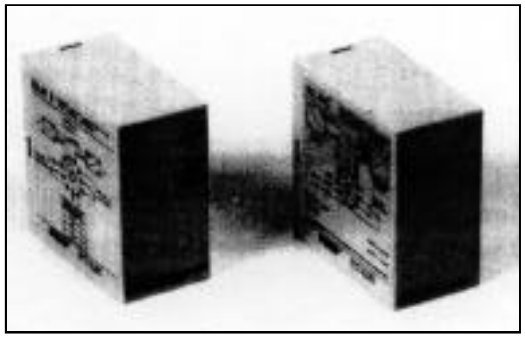

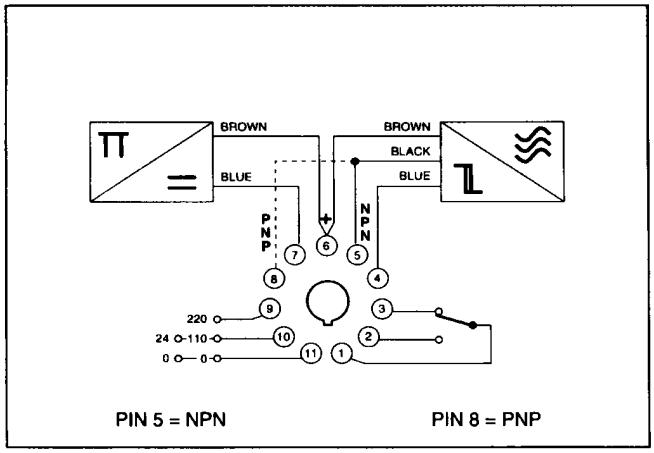


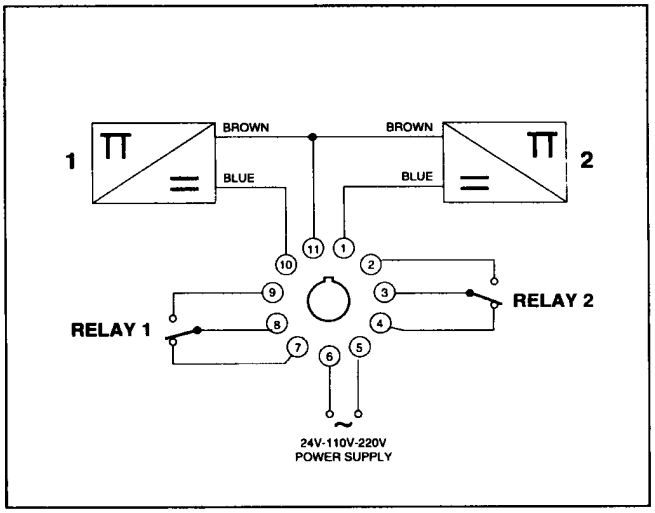


| SPECIFICATIONS | |
|---|---|
| Power supply (RP-49X-1) | 24VDC/AC |
| Power supply (RP-49X-2) ~ 15% | 110/220VAC 50-60Hz |
| Output voltage | 12 VDC |
| Operating power | 1.5VA |
| Max output current | 50 mA |
| Temperature range | -20 to + 60°C |
| Degree ot protection | IP 40 |
| LED indicators | yes |
| Model RP-490 SPDT relay output | 5A 220VAC |
| Model RP-491 two SPDT relay outputs | 5A 220VAC |

**DIMENSIONS (mm)**

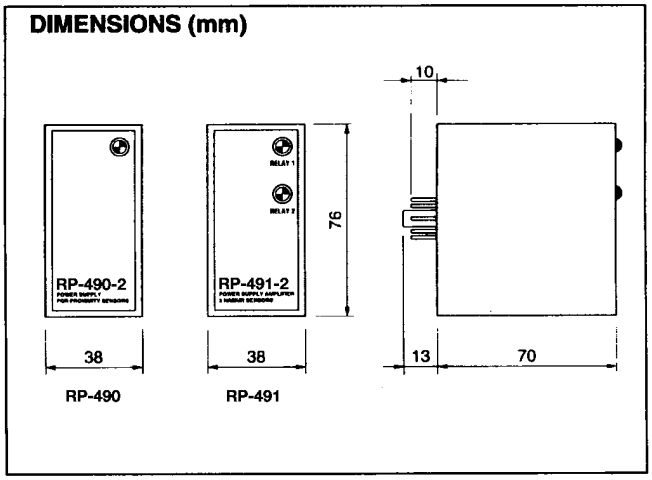


**MODEL NUMBERS**

| | |
|---|---|
| RP-490-1 | Amplifier and power supply for one sensor, 24V AC/DC supply |
| RP-490-2 | Amplifier and power supply for one sensor, 110/220 VAC supply |
| RP-491-1 | Amplifier and power supply for two NAMUR sensors, 24V AC/DC supply |
| RP-491-2 | Amplifier and power supply for two NAMUR sensors, 110/220 VAC supply |

Courtesy of Steven Engineering, Inc. • 230 Ryan Way, South San Francisco, CA, 94080-6370 • Main Office: (650) 588-9200 • Outside Local Area: (800) 258-9200 • www.stevenengineering.com

## Power Supply/Amplifier with Timer RP-492

**Specifications**

These units are very versatile as they can be used with all NAMUR, NPN and PNP sensors, functioning with relay ON or OFF load with a timing function in both states. They have a programmable time delay from 0.03 seconds to 12 minutes.

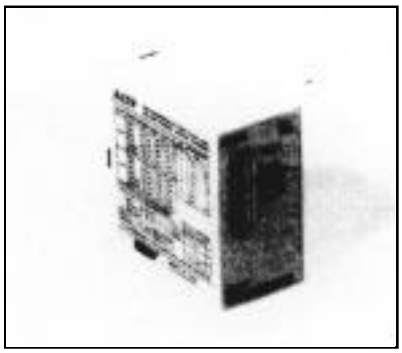

**Programmable Functions**

1) Delay

The range of delay is from 0.03 seconds and 512 seconds (see table A) in 9 selectable ranges via a dip switch mounted on the front. The selected scale can be adjusted by means of a potentiometer on a graduated scale from 0.05 to 1. It is possible to extend the range by summing the values shown on the scale.
Example : Place switches 1 and 2 ON, full scale is 512 + 128 or 640 seconds.

2) Type of function and sensor

This function is selected using dip switches 10, 11 and 12. Following table B it is possible program the instrument with an on delay (TE) or off delay (TD) depending on the sensor NAMUR, NPN or PNP. Furthermore it is possible to program these functions with relay normally open or normally closed.

| SWITCH POSTION | RANGE OF DELAY (in seconds) |
|---|---|
| 1 | 25.6 - 512 |
| 2 | 6.4 - 128 |
| 3 | 1.6 - 32 |
| 4 | 0.8 - 16 |
| 5 | 0.4 - 8.0 |
| 6 | 0.2 - 4.0 |
| 7 | 0.1 - 2.0 |
| 8 | 0.05 - 1.0 |
| 9 | 0.03 - 0.5 |

| RELAY | FUNCTION | | DIP 10 | DIP 11 | DIP 12 |
|---|---|---|---|---|---|
| NO | PNP | TE | OFF | OFF | ON |
| | PNP | TD | ON | OFF | OFF |
| | NPN | TE | ON | ON | ON |
| | NPN | TD | OFF | ON | OFF |
| | NAMUR | TE | ON | OFF | ON |
| | NAMUR | TD | OFF | OFF | OFF |
| NC | PNP | TE | OFF | OFF | OFF |
| | PNP | TD | ON | OFF | ON |
| | NPN | TE | OFF | ON | ON |
| | NPN | TD | ON | ON | OFF |
| | NAMUR | TE | OFF | OFF | ON |
| | NAMUR | TD | ON | OFF | OFF |

**WIRING DIAGRAM**

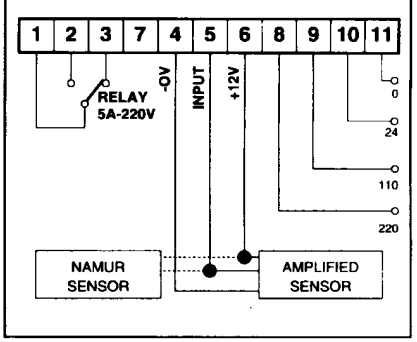


| SPECIFICATIONS | |
|---|---|
| Power supply (RP-492-1) | 24VDC/AC |
| Power supply (RP-492-2) ~ 15% | 110/220VAC 50-60Hz |
| Output voltage | 12 VDC |
| Operating power | 1.5VA |
| Max output current | 50 mA |
| Temperature range | -20 to + 60°C |
| Degree ot protection | IP 40 |
| LED indicators | yes |
| SPDT relay output | 5A 220VAC |
| Time delay | 0.03 sec. to 12 min. |

**DIMENSIONS (mm)**

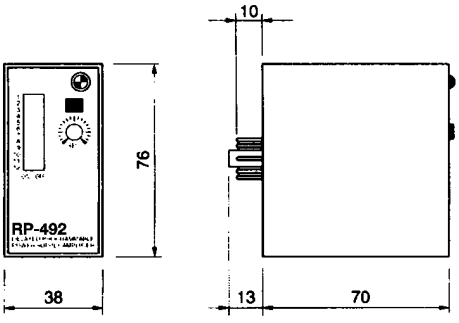


**MODEL NUMBERS**

RP-492-1 Amplifier, timer and power supply for one sensor, 24V AC/DC supply

RP-492-2 Amplifier, timer and power supply for one sensor, 110/220 VAC supply

Courtesy of Steven Engineering, Inc. • 230 Ryan Way, South San Francisco, CA, 94080-6370 • Main Office: (650) 588-9200 • Outside Local Area: (800) 258-9200 • www.stevenengineering.com

## Power Supply/Motion Detector RP-493

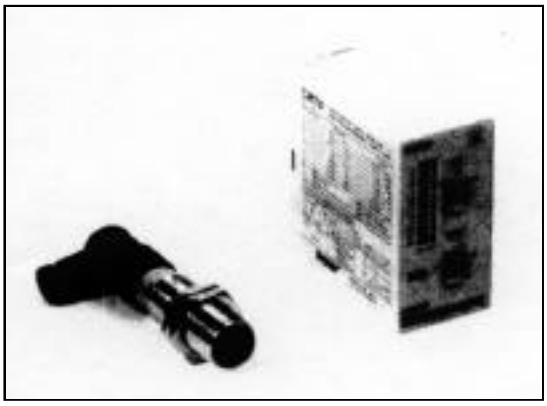

**Description**
This instrument monitors the time interval between two inpulses and if this interval is greater than that which is preset the unit intervenes and switches the relay which signals a slowdown or standstill situation. If the inpulse interval is less than preset the relay does not switch allowing normal operation. This control is carried out by the RP-493 controller which is made up of an electronic circuit which is enclosed in a plastic housing which has an 11 pin plug and a sensor which can be inductive, capacitive or photoelectric.

**Applications**
This unit is used for checking for the slowing down of rotating machinery due to the slipping of belts of clutches, fracture of transport belts or chains or as motor protection in the case of mechanical overload.

**Programmable Functions**

**1) Time and RPM**
The time range is from 0.03 sec. and 512 sec. distributed in nine ranges which can be selected by means of the front mounted dip switches. The selected scale can then be adjusted by means of a potentiometer which has a graduated scale from 0.05 to 1. It is possible to extend the range by summing the values shown on the scale. Example : Place switches 1 and 2 ON, full scale is 512 + 128 or 640 seconds. This operation can also be carried out on the RPM scale. For the conversion time/RPM see table.

**2) Function A-B**
When the RP-493 gives out a signal of standstill or slowing down it is possible to have two types of functions which can be selected by switch number 10 ON/OFF.
A: in order to reactivate the unit it is necessary to switch the power supply off and then on or reset.
B: the unit can be reactivated by means of the first impulse which arrives from the sensor or by means of the reset.
This is obtained with the switch in the OFF position.

**3) Sensor - NAMUR - NPN - PNP**
It is possible to select via the switch number 11 in the ON/OFF position the type of logic for the sensing unit. In the ON position it is possible to connect NPN sensors and in the OFF position PNP and NAMUR sensors.

**4) Rotation control - Zero speed/Shaft Standstill**
These functions can be selected by switch number 12 and in this way both functions can be carried out by the same instrument.
- ROTATION CONTROL - SWITCH OFF
With power applied the relay switches and maintains this position as long as the impulses from sensors are within the set time. If within that time on impulse is received the relay changes state giving an alarm condition, in the case of lack of power supply the relay changes state (see working diagram) giving the alarm condition (slowdown or stopping).
- SHAFT STAND STILL CONTROL - SWITCH ON
In this situation the relay works in exactly the opposite way. The relay activates when no impulse arrives within the set time thus showing the shaft standstill condition. In the case of loss of power supply the relay changes state thus giving the alarm condition (shaft movement).

**CONVERSION TABLE RPM/TIME AND PROGRAMMABLE FUNCTIONS**

| DIP SWITCH position | Number of RPM | | T1 Seconds | |
|---|---|---|---|---|
| 1 | 2.3 | 0.1 | 25.6 | 512 |
| 2 | 9.3 | 0.4 | 6.4 | 128 |
| 3 | 37.5 | 1.8 | 1.6 | 32 |
| 4 | 75 | 3.7 | 0.8 | 16 |
| 5 | 150 | 7,5 | 0.4 | 8 |
| 6 | 300 | 15 | 0.2 | 4 |
| 7 | 600 | 30 | 0.1 | 2 |
| 8 | 1200 | 60 | 0.05 | 1 |
| 9 | 2400 | 120 | 0.03 | 0,5 |
| 10 | ON (A FUNCTION) | | OFF (B FUNCTION) | |
| 11 | ON (NPN SENSOR) | | OFF (PNP/NAMUR SENSORS) | |
| 12 | ON (SHAFT STANDSTILL) | | OFF (ROTATION CONTROL) | |

ON ‹ › OFF

N.B. The positions from 1 ÷ 9 (Preselection ON) programm the time or RPM ranges.
Positions 10-11-12 programm the available functions.

Courtesy of Steven Engineering, Inc. • 230 Ryan Way, South San Francisco, CA, 94080-6370 • Main Office: (650) 588-9200 • Outside Local Area: (800) 258-9200 • www.stevenengineering.com

## RP-493 continued

**Initial delay**
The RP-493 has an adjustable initial time T2 which stops the unit from entering into operation until the rotating part has reached its normal working speed. The T2 time starts only when the unit is switched on or after reset.

**Security**
- In the case of the breakdown of the sensor the relay deactivates.
- In the case that the reference point stops in front of the sensor the relay deactivates.

These conditions can be found when the instrument is used as a protection control (velocity reduction) with the switch number 12 in the OFF position. When the unit is used as a shaft standstill control when switch number 12 is in the ON position the relay activates.

**Installation and Calibration**
After having set the time T1 required by using the following formula:

$$T1 = \frac{60}{\text{RPM x Number of references}} = \_\_\_\_\_ \text{sec.}$$

and after having selected from the available functions positioned the sensor and relative references, the RP-493 unit can carry out the control.

| SPECIFICATIONS | |
|---|---|
| Power supply | 24VDC/AC 110/220VAC 50-60Hz |
| Output voltage | 12 VDC |
| Operating power | 1.5VA |
| Max output current | 50 mA |
| Temperature range | -20 to + 60°C |
| Degree ot protection | IP 40 |
| LED indicators | yes |
| SPDT relay output | 5A 220VAC |
| Time delay T1 | 0.03 sec. to 512 sec. |
| RPM sensing range | 0.1 to 2400 rpm |
| Initial delay T2 | 0.3 to 10 sec. |

**MODEL NUMBER**

RP-493 Amplifier, timer and power supply for one sensor
Universal power supply

**WORKING DIAGRAM**

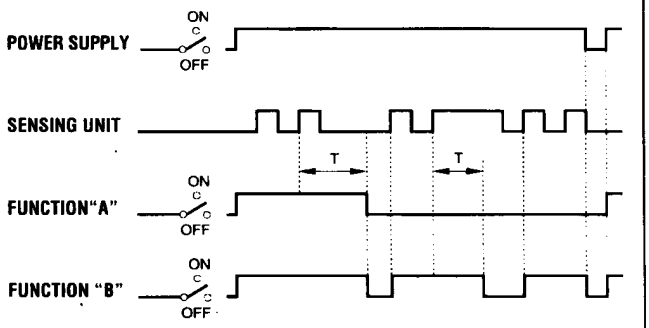


**WIRING DIAGRAMS**

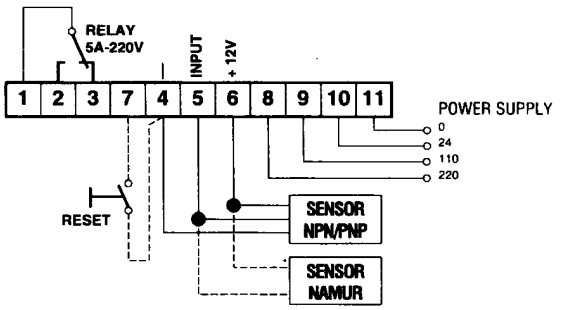


SENSOR NPN = POSITION 11 / ON
SENSOR PNP / NAMUR = POSITION 11 / OFF

**TYPICAL WORKING DIAGRAM**

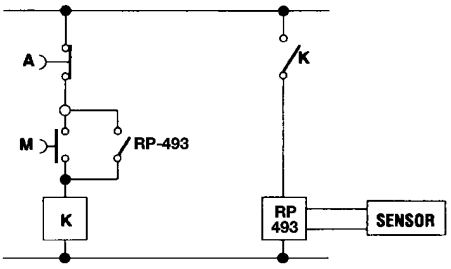


**DIMENSIONS (mm)**

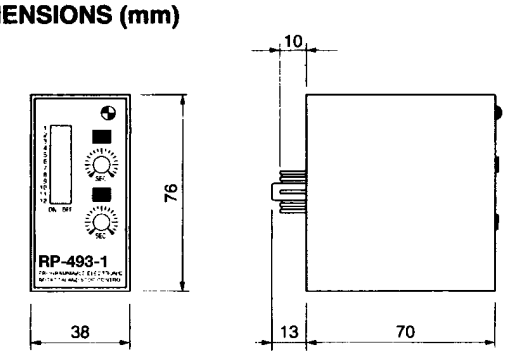

Courtesy of Steven Engineering, Inc. • 230 Ryan Way, South San Francisco, CA, 94080-6370 • Main Office: (650) 588-9200 • Outside Local Area: (800) 258-9200 • www.stevenengineering.com

## Cables

| Model | Wires | AC/DC | Style | LEDs | Length | Figure | Applications |
|---|---|---|---|---|---|---|---|
| RP-503 | 3 | AC | straight | no | 2m | 1 | 1248A, 1250 |
| RP-503-5 | 3 | AC | straight | no | 5m | 1 | 1248A, 1250 |
| RP-509 | 3 | DC | right angle | yes | 2m | 2 | NPN, NO sensors only |
| RP-510 | 3 | DC | right angle | yes | 2m | 2 | PNP, NO sensors only |
| RP-511 | 3 | DC | straight | no | 2m | 3 | NO sensors only |
| RP-511-5 | 3 | DC | straight | no | 5m | 3 | NO sensors only |
| RP-512 | 3 | DC | right angle | no | 2m | 5 | NO sensors only |
| RP-512-5 | 3 | DC | right angle | no | 5m | 5 | NO sensors only |
| RP-513 | 3 | AC | straight | no | 2m | 4 | AC weld-immune only |
| RP-513-5 | 3 | AC | straight | no | 5m | 4 | AC weld-immune only |
| RP-514 | 3 | AC | right angle | no | 2m | 6 | AC weld-immune only |
| RP-514-5 | 3 | AC | right angle | no | 5m | 6 | AC weld-immune only |
| RP-515 | 3 | DC | right angle | yes | 2m | 2 | NPN, NO sensors only |
| RP-515-5 | 3 | DC | right angle | yes | 5m | 2 | NPN, NO sensors only |
| RP-515-F | 3 | DC | right angle | yes | 2m | 2 | NPN, NO sensors only |
| RP-516 | 3 | DC | right angle | yes | 2m | 2 | PNP, NO sensors only |
| RP-516-5 | 3 | DC | right angle | yes | 5m | 2 | PNP, NO sensors only |
| RP-516-F | 3 | DC | right angle | yes | 2m | 2 | PNP, NO sensors |
| RP-522 | 3 | DC | minature, straight | no | 2m | - | NO sensors only |
| RP-523 | 3 | DC | minature, right angle | yes | 2m | 7 | PNP, NO sensors only |
| RP-523-5 | 3 | DC | minature, right angle | yes | 5m | 7 | PNP, NO sensors only |
| RP-524 | 3 | DC | minature, right angle | yes | 2m | 7 | NPN, NO sensors only |
| RP-524-5 | 3 | DC | minature, right angle | yes | 5m | 7 | NPN, NO sensors only |
| RP-526 | 4 | DC | straight | no | 2m | 3 | 12mm/18mm/30mm sensors |
| RP-526-5 | 4 | DC | straight | no | 5m | 3 | 12mm/18mm/30mm sensors |
| RP-528 | 4 | DC | straight | no | 2m | - | 5mm/8mm sensors |
| RP-529 | 4 | DC | right angle | no | 2m | 7 | 5mm/8mm sensors |
| RP-530 | 4 | DC | right angle | no | 2m | 2 | 12mm/18mm/30mm sensors |
| RP-530-5 | 4 | DC | right angle | no | 5m | 2 | 12mm/18mm/30mm sensors |
| RP-531 | 4 | DC | right angle | yes | 2m | 2 | NPN, 12mm/18mm/30mm |
| RP-531-5 | 4 | DC | right angle | yes | 5m | 2 | NPN, 12mm/18mm/30mm |
| RP-532 | 4 | DC | right angle | yes | 2m | 2 | PNP, 12mm/18mm/30mm |
| RP-533 | 4 | DC | right angle | yes | 2m | 2 | NPN, 12mm/18mm/30mm |

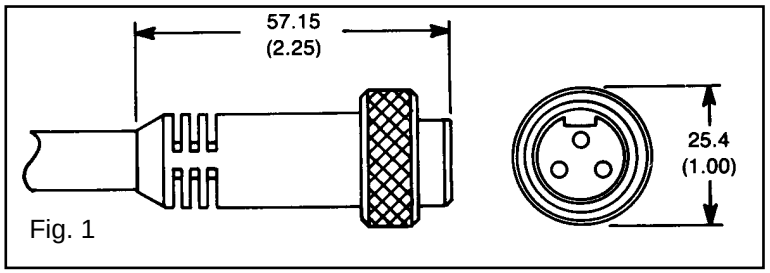

Fig. 1

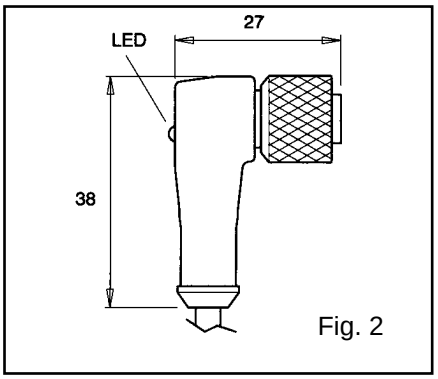

Fig. 2

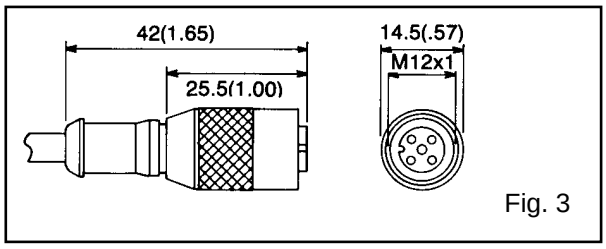

Fig. 3

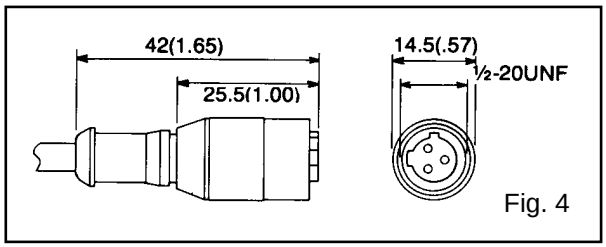

Fig. 4

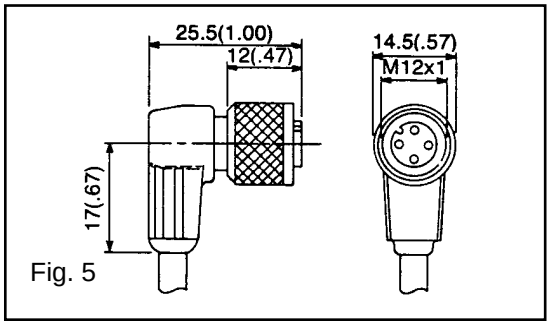

Fig. 5

additional figures on next page

## Cables, continued

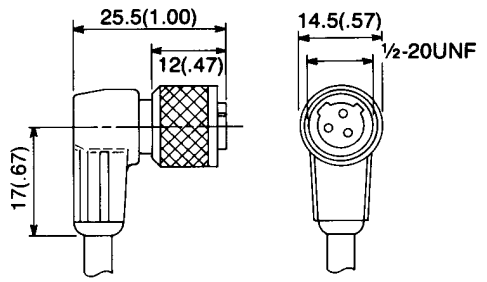

Fig. 6

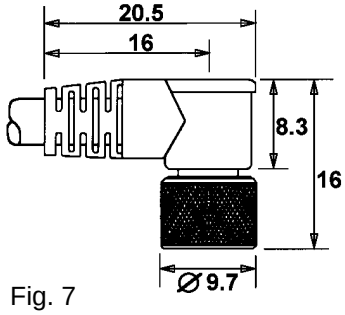

Fig. 7

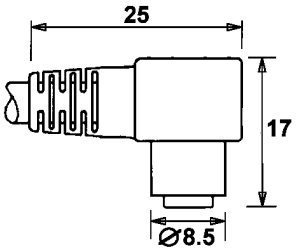

Fig. 8

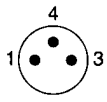

Male connector C1 & C3
1=Brown/+
3=Blue/-
4=Black/output NPN-PNP/NO-NC
Fig. 9

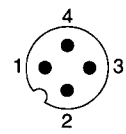

Male connector C
DC 3 & 4 wire
1=Brown/+
3=Blue/-
4=Black/output NPN-PNP/NO
2=White/output NPN-PNP/NC
AC & DC 2 wire
3/4=NO
1/2=NC
Fig. 10

## Connectors

| Model | Description |
|---|---|
| RP-495 | |
| RP-496 | 3mm/5mm connector |
| RP-497 | 3mm/5mm connector |
| RP-498 | right angle, with screw terminals |
| RP-499 | straight, with screw terminals |
| RP-500 | 18mm right angle connector |
| RP-501 | connector w/LED NPN, NO |

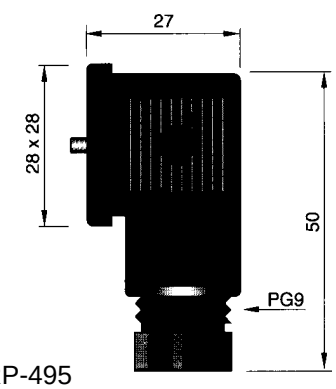

RP-495

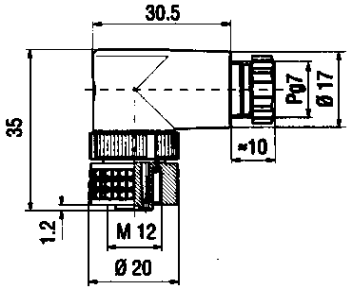

RP-498

## Mounting Brackets

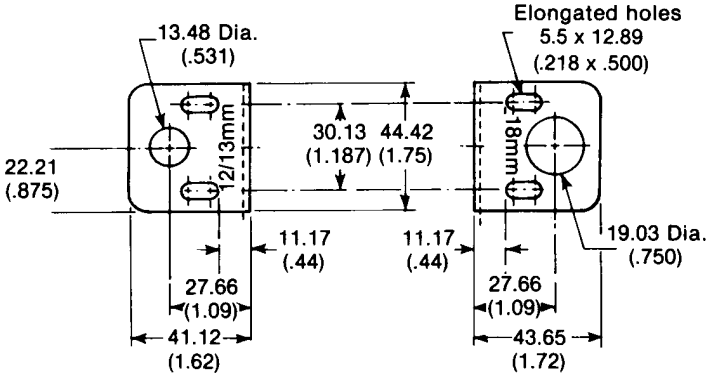

MB-1 12 mm and 18 mm diameter

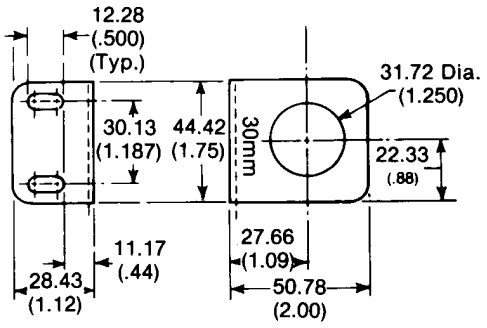

MB-2 30 mm diameter

Courtesy of Steven Engineering, Inc. • 230 Ryan Way, South San Francisco, CA, 94080-6370 • Main Office: (650) 588-9200 • Outside Local Area: (800) 258-9200 • www.stevenengineering.com

Courtesy of Steven Engineering, Inc. • 230 Ryan Way, South San Francisco, CA, 94080-6370 • Main Office: (650) 588-9200 • Outside Local Area: (800) 258-9200 • www.stevenengineering.com

## Reflectors

| Reflectors | Dimensions | Relative reflectivity |
|---|---|---|
| RP-450 | 20 mm dia. 5 mm thick | 31% |
| RP-451 | 47 mm dia. 8 mm thick | 63% |
| RP-452 | 84 mm dia. 8 mm thick | 100% |
| RP-453 | 72 mm X 32 mm, 6 mm thick | 70% |
| RP-454 | 90 mm X 40 mm, 5 mm thick | 79% |

**RP-453**
Thickness 6 mm

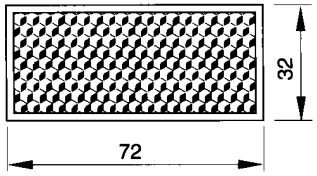


**RP-450**
Thickness 5 mm

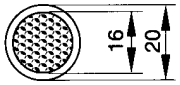


**RP-452**
Thickness 8 mm

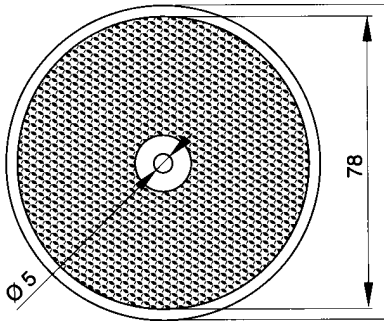


**RP-454**
Thickness 5 mm

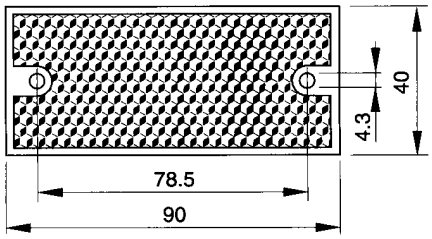


**RP-451**
Thickness 8 mm

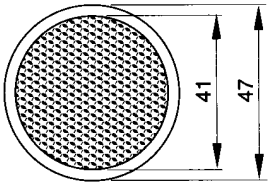


## Conduit Adapters

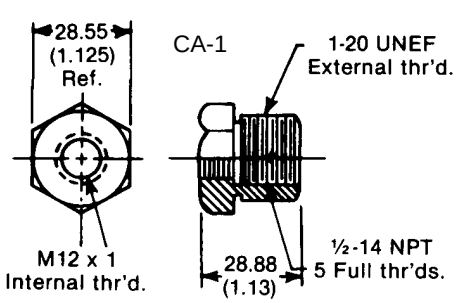


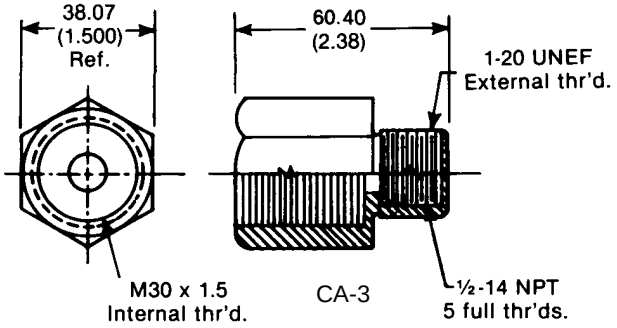


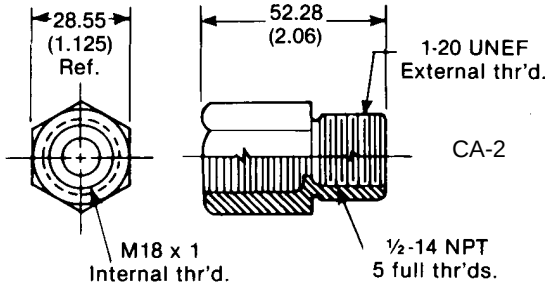


## Miscellaneous

| Model | Reference | Description |
|---|---|---|
| RP-307 | page 37 | hold-down spring for RP-490 to RP-493 |
| RP-330 | page 37 | 8 pin socket for RP-490 to RP-493 |
| RP-331 | page 37 | 11 pin socket for RP-490 to RP-493 |
| RP-408M | - | 8 mm nickel plated brass hex nut |
| RP-408P | - | 8 mm plastic hex nut |
| RP-412 | - | 12 mm nickel plated brass hex nut |
| RP-418M | - | 18 mm nickel plated brass hex nut |
| RP-418P | - | 18 mm plastic hex nut |
| RP-430 | - | 30 mm nickel plated brass hex nut |
| RP-570 | - | 12 mm dust cap |
| RP-590 | page 33 | capacitive sensor protective housing, cable units except 40mm |
| RP-591 | page 33 | capacitive sensor protective housing, connector units |
| RP-592 | page 33 | capacitive sensor protective housing, 40mm units |
| RP-593 | page 33 | lock nut for capacitive sensors |

Courtesy of Steven Engineering, Inc. • 230 Ryan Way, South San Francisco, CA, 94080-6370 • Main Office: (650) 588-9200 • Outside Local Area: (800) 258-9200 • www.stevenengineering.com


| Model | Page | Model | Page | Model | Page | Model | Page |
|---|---|---|---|---|---|---|---|
| 1217P-1 | 16 | L17-D360-F | 19 | R30-D068-F | 23 | RP-526 | 41 |
| 1217P-2 | 16 | L17-D460-F | 19 | R30-D760-F | 23 | RP-526-5 | 41 |
| 1217P-3 | 16 | L17-D560-F | 19 | R30-D768-F | 23 | RP-527 | 41 |
| 1221-1-A-1-A | 16 | L17-D660-F | 19 | R44-D060-F | 23 | RP-528 | 41 |
| 1248A-1A4P | 17 | L40-AP10-F | 29 | R44-D068-F | 23 | RP-529 | 41 |
| 1250-1-A-1 | 17 | L40-AP60-F | 29 | R44-D760-F | 23 | RP-530 | 41 |
| 1250-1-A-2 | 17 | L40-D010-F | 16 | R44-D768-F | 23 | RP-530-5 | 41 |
| 1250-1-A-3 | 17 | L40-D060-F | 16 | R63-D060-F | 23 | RP-531 | 41 |
| 1250-1-B-1 | 17 | L40-D710-F | 16 | R63-D068-F | 23 | RP-531-5 | 41 |
| 1250-1-B-2 | 17 | L40-D760-F | 16 | R63-D760-F | 23 | RP-532 | 41 |
| 1250-1-B-3 | 17 | L40-DP10-F | 16 | R63-D768-F | 23 | RP-533 | 41 |
| 1250-2-A-1 | 17 | L40-DP60-F | 16 | RP-307 | 43 | RP-533-5 | 41 |
| 1250-2-A-2 | 17 | L80-AP64-F | 29 | RP-330 | 43 | RP-534 | 41 |
| 1250-2-A-3 | 17 | L80-D064-F | 18 | RP-331 | 43 | RP-535 | 41 |
| 1250-2-B-1 | 17 | L80-D764-F | 18 | RP-408M | 43 | RP-536 | 41 |
| 1250-2-B-2 | 17 | L80-DP64-F | 18 | RP-408P | 43 | RP-537 | 41 |
| 1250-2-B-3 | 17 | MB-1 | 42 | RP-412 | 43 | RP-570 | 41 |
| CA-1 | 43 | MB-2 | 42 | RP-418M | 43 | RP-590 | 33 |
| CA-2 | 43 | OT18-AAR-F | 34 | RP-418P | 43 | RP-591 | 33 |
| CA-3 | 43 | OT18-AARH-F | 34 | RP-430M | 43 | RP-592 | 33 |
| CP18-D060-F | 32 | OT18-ABE-F | 35 | RP-450 | 43 | RP-593 | 33 |
| CP18-D760-F | 32 | OT18-ABEH-F | 35 | RP-451 | 43 | T04-D310-F | 6 |
| CP30-AP64-F | 33 | OT18-ABR-F | 35 | RP-452 | 43 | T04-D410-F | 6 |
| CP30-D060-F | 32 | OT18-ABRH-F | 35 | RP-453 | 43 | T04-D510-F | 6 |
| CP30-D064-F | 32 | OT18-AP2-F | 34 | RP-454 | 43 | T04-D610-F | 6 |
| CP30-D760-F | 32 | OT18-AP2H-F | 34 | RP-490-1 | 37 | T05-D310-F | 6 |
| CP30-D764-F | 32 | OT18-AP4-F | 34 | RP-490-2 | 37 | T05-D313-F | 6 |
| CP40-A160-F | 33 | OT18-AP4H-F | 34 | RP-491-1 | 37 | T05-D410-F | 6 |
| CP40-A260-F | 33 | OT18-AR-F | 34 | RP-491-2 | 37 | T05-D413-F | 6 |
| CP40-D060-F | 32 | OT18-ARH-F | 34 | RP-491-3 | 37 | T05-D513-F | 6 |
| CP40-D760-F | 32 | OT18M-CAR-F | 34 | RP-492-1 | 38 | T05-D613-F | 6 |
| CT18-D010-F | 32 | OT18M-CARH-F | 34 | RP-492-2 | 38 | T06-DN10-F | 26 |
| CT18-D310-F | 32 | OT18M-CBE-F | 35 | RP-493-1 | 39 | T06-DN18-F | 26 |
| CT18-D410-F | 32 | OT18M-CBEH-F | 35 | RP-493-2 | 39 | T06-DN60-F | 26 |
| CT18-D710-F | 32 | OT18M-CBR-F | 35 | RP-496 | 41 | T06-DN68-F | 26 |
| CT30-A110-F | 33 | OT18M-CBRH-F | 35 | RP-497 | 41 | T08-D310-F | 7 |
| CT30-A210-F | 33 | OT18M-CP2-F | 34 | RP-498 | 41 | T08-D310S-F | 8 |
| CT30-AP14-F | 33 | OT18M-CP2H-F | 34 | RP-499 | 41 | T08-D313S-F | 8 |
| CT30-D010-F | 32 | OT18M-CP4-F | 34 | RP-500 | 41 | T08-D318-F | 7 |
| CT30-D710-F | 32 | OT18M-CP4H-F | 34 | RP-501 | 39 | T08-D360-F | 7 |
| HT05-D310-F | 21 | OT18M-CR-F | 34 | RP-503 | 41 | T08-D360S-F | 8 |
| HT08-D310-F | 21 | OT18M-CRH-F | 34 | RP-503-5 | 41 | T08-D363S-F | 8 |
| HT12-DN10-F | 21 | PT12-A160-F | 27 | RP-504 | 41 | T08-D368-F | 7 |
| L08-D310-F | 20 | R05-D060-F | 23 | RP-506 | 41 | T08-D410-F | 7 |
| L08-D313-F | 20 | R05-D363-F | 23 | RP-506-5 | 41 | T08-D410S-F | 8 |
| L08-D410-F | 20 | R05-D463-F | 23 | RP-507 | 41 | T08-D413S-F | 8 |
| L08-D413-F | 20 | R05-D563-F | 23 | RP-507-5 | 41 | T08-D418-F | 7 |
| L08-D510-F | 20 | R05-D663-F | 23 | RP-509 | 41 | T08-D460-F | 7 |
| L08-D513-F | 20 | R05-D760-F | 23 | RP-510 | 41 | T08-D460S-F | 8 |
| L08-D610-F | 20 | R100-D060-F | 23 | RP-511 | 41 | T08-D463S-F | 8 |
| L08-D613-F | 20 | R100-D068-F | 23 | RP-511-5 | 41 | T08-D468-F | 7 |
| L10-D310-F | 20 | R100-D760-F | 23 | RP-512 | 41 | T08-D510S-F | 8 |
| L10-D313-F | 20 | R100-D768-F | 23 | RP-512-5 | 41 | T08-D513S-F | 8 |
| L10-D410-F | 20 | R12-D060-F | 23 | RP-513 | 41 | T08-D518-F | 7 |
| L10-D413-F | 20 | R12-D363-F | 23 | RP-513-5 | 41 | T08-D560S-F | 8 |
| L10-D510-F | 20 | R12-D463-F | 23 | RP-514 | 41 | T08-D563S-F | 8 |
| L10-D513-F | 20 | R12-D563-F | 23 | RP-514-5 | 41 | T08-D568-F | 7 |
| L10-D610-F | 20 | R12-D663-F | 23 | RP-515 | 41 | T08-D610S-F | 8 |
| L10-D613-F | 20 | R12-D760-F | 23 | RP-515-5 | 41 | T08-D613S-F | 8 |
| L12-A110-F | 30 | R22-D060-F | 23 | RP-516 | 41 | T08-D618-F | 7 |
| L12-A160-F | 30 | R22-D068-F | 23 | RP-516-5 | 41 | T08-D660S-F | 8 |
| L12-A210-F | 30 | R22-D760-F | 23 | RP-520 | 41 | T08-D663S-F | 8 |
| L12-A260-F | 30 | R22-D768-F | 23 | RP-521 | 41 | T08-D668-F | 7 |
| L12-D010-F | 19 | R25-D010-F | 23 | RP-522 | 41 | T08-DA10-F | 21 |
| L12-D060-F | 19 | R25-D018-F | 23 | RP-523 | 41 | T08-DN10-F | 26 |
| L12-D710-F | 19 | R25-D710-F | 23 | RP-523-5 | 41 | T08-DN18-F | 26 |
| L12-D760-F | 19 | R25-D718-F | 23 | RP-524 | 41 | T08-DN60-F | 26 |
| L12-DA60-F | 21 | R30-D060-F | 23 | RP-524-5 | 41 | T08-DN68-F | 26 |

| Model | Page | Model | Page | Model | Page | Model | Page |
|---|---|---|---|---|---|---|---|
| T12-A110-F | 27 | T18-D018-F | 12 | T30-D968-F | 15 | XT08-D563-F | 8 |
| T12-A118-F | 27 | T18-D060-F | 12 | T30-DA10-F | 21 | XT08-D610-F | 8 |
| T12-A160-F | 27 | T18-D068-F | 12 | T30-DL60-F | 22 | XT08-D613-F | 8 |
| T12-A168-F | 27 | T18-D310-F | 12 | T30-DN10-F | 26 | XT08-D660-F | 8 |
| T12-A210-F | 27 | T18-D318-F | 12 | T30-DN18-F | 26 | XT08-D663-F | 8 |
| T12-A218-F | 27 | T18-D360-F | 12 | T30-DN60-F | 26 | XT12-D310-F | 11 |
| T12-A260-F | 27 | T18-D368-F | 12 | T30-DN68-F | 26 | XT12-D318-F | 11 |
| T12-A268-F | 27 | T18-D410-F | 12 | TMS-D101 | 36 | XT12-D360-F | 11 |
| T12-D010-F | 9 | T18-D418-F | 12 | TMS-D102 | 36 | XT12-D368-F | 11 |
| T12-D010S-F | 10 | T18-D460-F | 12 | TMS-D103 | 36 | XT12-D410-F | 11 |
| T12-D018-F | 9 | T18-D468-F | 12 | TMS-D104 | 36 | XT12-D418-F | 11 |
| T12-D018S-F | 10 | T18-D518-F | 12 | TT12-D310-F | 10 | XT12-D460-F | 11 |
| T12-D060-F | 9 | T18-D568-F | 12 | TT12-D360-F | 10 | XT12-D468-F | 11 |
| T12-D060S-F | 10 | T18-D618-F | 12 | WT12-A110-F | 31 | XT12-D510-F | 11 |
| T12-D068-F | 9 | T18-D668-F | 12 | WT12-A1110-F | 31 | XT12-D518-F | 11 |
| T12-D068S-F | 10 | T18-D710-F | 12 | WT12-A160-F | 31 | XT12-D560-F | 11 |
| T12-D310-F | 9 | T18-D718-F | 12 | WT12-A1610-F | 31 | XT12-D568-F | 11 |
| T12-D310S-F | 10 | T18-D760-F | 12 | WT12-A210-F | 31 | XT12-D610-F | 11 |
| T12-D318-F | 9 | T18-D768-F | 12 | WT12-A2110-F | 31 | XT12-D618-F | 11 |
| T12-D318S-F | 10 | T18-D810-F | 13 | WT12-A260-F | 31 | XT12-D660-F | 11 |
| T12-D360-F | 9 | T18-D818-F | 13 | WT12-A2610-F | 31 | XT12-D668-F | 11 |
| T12-D360S-F | 10 | T18-D860-F | 13 | WT12-D410-F | 25 | XT18-D310-F | 13 |
| T12-D368-F | 9 | T18-D868-F | 13 | WT12-D418-F | 25 | XT18-D318-F | 13 |
| T12-D368S-F | 10 | T18-D910-F | 13 | WT12-D460-F | 25 | XT18-D360-F | 13 |
| T12-D410-F | 9 | T18-D918-F | 13 | WT12-D468-F | 25 | XT18-D368-F | 13 |
| T12-D410S-F | 10 | T18-D960-F | 13 | WT18-A110-F | 31 | XT18-D410-F | 13 |
| T12-D418-F | 9 | T18-D968-F | 13 | WT18-A1110-F | 31 | XT18-D418-F | 13 |
| T12-D418S-F | 10 | T18-DA10-F | 21 | WT18-A160-F | 31 | XT18-D460-F | 13 |
| T12-D460-F | 9 | T18-DL10-F | 22 | WT18-A1610-F | 31 | XT18-D468-F | 13 |
| T12-D460S-F | 10 | T18-DN10-F | 26 | WT18-A210-F | 31 | XT18-D510-F | 13 |
| T12-D468-F | 9 | T18-DN18-F | 26 | WT18-A2110-F | 31 | XT18-D518-F | 13 |
| T12-D468S-F | 10 | T18-DN60-F | 26 | WT18-A260-F | 31 | XT18-D560-F | 13 |
| T12-D518-F | 9 | T18-DN68-F | 26 | WT18-A2610-F | 31 | XT18-D568-F | 13 |
| T12-D568-F | 9 | T30-A110-F | 28 | WT18-D410-F | 25 | XT18-D610-F | 13 |
| T12-D618-F | 9 | T30-A118-F | 28 | WT18-D418-F | 25 | XT18-D618-F | 13 |
| T12-D668-F | 9 | T30-A160-F | 28 | WT18-D460-F | 25 | XT18-D660-F | 13 |
| T12-D710-F | 9 | T30-A168-F | 28 | WT18-D468-F | 25 | XT18-D668-F | 13 |
| T12-D710S-F | 10 | T30-A210-F | 28 | WT30-A110-F | 31 | XT30-D310-F | 15 |
| T12-D718-F | 9 | T30-A218-F | 28 | WT30-A1110-F | 31 | XT30-D318-F | 15 |
| T12-D718S-F | 10 | T30-A260-F | 28 | WT30-A160-F | 31 | XT30-D410-F | 15 |
| T12-D760-F | 9 | T30-A268-F | 28 | WT30-A1610-F | 31 | XT30-D418-F | 15 |
| T12-D760S-F | 10 | T30-D010-F | 14 | WT30-A210-F | 31 | XT30-D510-F | 15 |
| T12-D768-F | 9 | T30-D018-F | 14 | WT30-A2110-F | 31 | XT30-D518-F | 15 |
| T12-D768S-F | 10 | T30-D060-F | 14 | WT30-A260-F | 31 | XT30-D610-F | 15 |
| T12-D810-F | 11 | T30-D068-F | 14 | WT30-A2610-F | 31 | XT30-D618-F | 15 |
| T12-D818-F | 11 | T30-D310-F | 14 | WT30-D410-F | 25 | | |
| T12-D860-F | 11 | T30-D318-F | 14 | WT30-D418-F | 25 | | |
| T12-D868-F | 11 | T30-D360-F | 14 | WT30-D460-F | 25 | | |
| T12-D910-F | 11 | T30-D368-F | 14 | WT30-D468-F | 25 | | |
| T12-D918-F | 11 | T30-D410-F | 14 | XT06-D310-F | 7 | | |
| T12-D960-F | 11 | T30-D418-F | 14 | XT06-D313-F | 7 | | |
| T12-D968-F | 11 | T30-D460-F | 14 | XT06-D410-F | 7 | | |
| T12-DA10-F | 21 | T30-D468-F | 14 | XT06-D413-F | 7 | | |
| T12-DL10-F | 22 | T30-D518-F | 14 | XT06-D510-F | 7 | | |
| T12-DL60-F | 22 | T30-D568-F | 14 | XT06-D513-F | 7 | | |
| T12-DN10-F | 26 | T30-D618-F | 14 | XT06-D610-F | 7 | | |
| T12-DN18-F | 26 | T30-D668-F | 14 | XT06-D613-F | 7 | | |
| T12-DN60-F | 26 | T30-D710-F | 14 | XT08-D310-F | 8 | | |
| T12-DN68-F | 26 | T30-D718-F | 14 | XT08-D313-F | 8 | | |
| T18-A110-F | 28 | T30-D760-F | 14 | XT08-D360-F | 8 | | |
| T18-A118-F | 28 | T30-D768-F | 14 | XT08-D363-F | 8 | | |
| T18-A160-F | 28 | T30-D810-F | 15 | XT08-D410-F | 8 | | |
| T18-A168-F | 28 | T30-D818-F | 15 | XT08-D413-F | 8 | | |
| T18-A210-F | 28 | T30-D860-F | 15 | XT08-D460-F | 8 | | |
| T18-A218-F | 28 | T30-D868-F | 15 | XT08-D463-F | 8 | | |
| T18-A260-F | 28 | T30-D910-F | 15 | XT08-D510-F | 8 | | |
| T18-A268-F | 28 | T30-D918-F | 15 | XT08-D513-F | 8 | | |
| T18-D010-F | 12 | T30-D960-F | 15 | XT08-D560-F | 8 | | |


Courtesy of Steven Engineering, Inc. • 230 Ryan Way, South San Francisco, CA, 94080-6370 • Main Office: (650) 588-9200 • Outside Local Area: (800) 258-9200 • www.stevenengineering.com

Courtesy of Steven Engineering, Inc. • 230 Ryan Way, South San Francisco, CA, 94080-6370 • Main Office: (650) 588-9200 • Outside Local Area: (800) 258-9200 • www.stevenengineering.com



KANSON ELECTRONICS, INC.
245 FORREST AVENUE
HOHENWALD, TN 38462

931-796-3050 FAX 931-796-3956

**web http://www.issc-kanson.com/**

For other control products refer to our
**Solid State Timer and**
**Control Component Catalog**
ask for Bulletin 1000

**Call an ISSC Engineer for answers to your application questions.**

**Toll free**
**800-233-9354**

## KANSON ELECTRONICS, INC.

also offers a broad range of contract manufacturing services. Please visit our web site or call for details.

Bulletin 9000 PDF version 9/10/98.
Subject to change without notice.

THE INFORMATION ON THIS DRAWING IS THE PROPERTY OF EATON | Cutler-Hammer, IS DISCLOSED IN CONFIDENCE AND IS NOT TO BE REPRODUCED, USED OR DISCLOSED EXCEPT FOR THE PURPOSE FOR WHICH FURNISHED.

| DWG. NO. | REVISION | SHEET NO. |
|---|---|---|
| PUB51670 | 01 | 1 OF 1 |

FILETYPE: EXCEL | EATON | Cutler-Hammer

MILWAUKEE OPERATIONS & TECHNICAL CENTER - MILWAUKEE, WI

NEW

TITLE: **XTOB OVERLOAD RELAY FRAME B AND C**

PRODUCT CODE: XT-1

| DR. | M. DOWSKE | DATE | ECN NO. | DEV. NO. |
|---|---|---|---|---|
| CHK. | B. WENNINGER | | | |
| APP. | M. SCHUBRING | 18-Sep-06 | XT#10201 | 129-1657 |

| Part / Asm No. | ( 30 Characters Max. ) Description | Stocking U/M |
|---|---|---|
| PUB51670 | XTOB OVERLOAD RELAY FR B & C | EA |

**MAPICS™ Sites:** MK3

NOTES:
1) PRINT ON OPAQUE WHITE 20 LB. PAPER
2) FINISHED PUB WIDTH 135,0 ± 6 [5.3" ± .25"] X HEIGHT OF 254,0 ± 6 [10.0" ± .25"], WITH 3,0 [0.12] - 7,0 [0.28] WHITE SPACE AROUND EDGES.
3) VISUALLY INSPECT PRINTED PUBLICATIONS FOR CLARITY, NO FADE PERMITTED.
4) HIGH RESOLUTION PDF FILE FOR PRINTING OF PUBLICATION TO BE PROVIDED.

RoHS COMPLIANT

| APP. | MS |
|---|---|
| DATE | 03-12-06 |

| MAPICS Parts List Items | | | Unit of Measure (U/M) | Quantities |
|---|---|---|---|---|
| Item Balloon | Item Part No. | ( 30 Characters Max. ) Item Description | | PUB51670 |
| 001 | | | | |
| 002 | | | | |
| 003 | | | | |
| 004 | | | | |
| 005 | | | | |
| 006 | | | | |
| 007 | | | | |
| 008 | | | | |
| 009 | | | | |
| 010 | | | | |

**Do Not Print This Page.**

ITEMS BELOW THIS POINT ARE REFERENCE SPECIFICATONS

| | | | | | |
|---|---|---|---|---|---|
| 999 | 50-2500 | DIMENSIONING & TOLERANCE SPEC. | EA | REF | |



This Uncontrolled Copy Was Printed On: 18-Sep-06

# EATON | Cutler-Hammer

# XTOB Overload Relay Frame B and C

**Dangerous Electrial Current!** Only skilled or qualified persons may carry out the following operations.
**Lebensgefahr durch elektrischen Strom!** Nur Elektrofachkräfte und elektrotechnisch unterwiesene Personen düfen die im Folgenden beschriebenen Arbeiten ausführen.
**Tension électrique dangereuse !** Seules les personnes qualifées et averties doivent exécuter les travaux ci-après.
**Tensione elettrica: Pericolo di morte!** Solo persone abilitate e qualificate possono eseguire le operazioni di seguito riportate.
**¡Corriente eléctrica! ¡Peligro de muerte!** El trabajo a continuación descrito debe ser realizado por personas cualificadas y advertidas.
**Электрический ток! Опасно для жизни!** Только специалисты или проинструктированные лица могут выполнять следующие операции.

**Warning!** Motor may start automatically. Automatic start may injure persons and damage machines. Automatic restart is possible when "automatic reset" is active.

**Warnung!** Automatischer Wiederanlauf des Motors kann zu Personen- und Sachschäden führen. Die Gefahr des automatischen Wiederanlaufs ist in der Betriebsart "Automatische Rückstellung" gegeben.

**Avertissement !** Le redémarrage automatique du moteur peut provoquer des dégâts matériels et étre dangereux pour les personnes. Ce danger du redémarrage automatique correspond au mode «réarmement.

**Avvertimento!** Il riavvio automatico del motore può provocare danni a persone e/o cose. Il pericolo del riavvio automatico si ha quandoll selettore è posizionato su "riarmo automatico".

**Advertencia!** El motor puede arrancar automaticamente. Elarranque automático es posible cuando el "botón de reset" está en posicion automático y el circuito de maniobra activado.

**Осторожно! Автоматический повторный пуск электродвигателя может привести к травматизму персонала и материальному ущербу. Автоматический запуск двигателя возможен при включенном " Автоматическом возврате в исходное положение".**
警告！发动机的自动转动有可能导致人员和财产的损失。
如果调到"自动返回原位"的位置,可能会出现自动转动的危险。

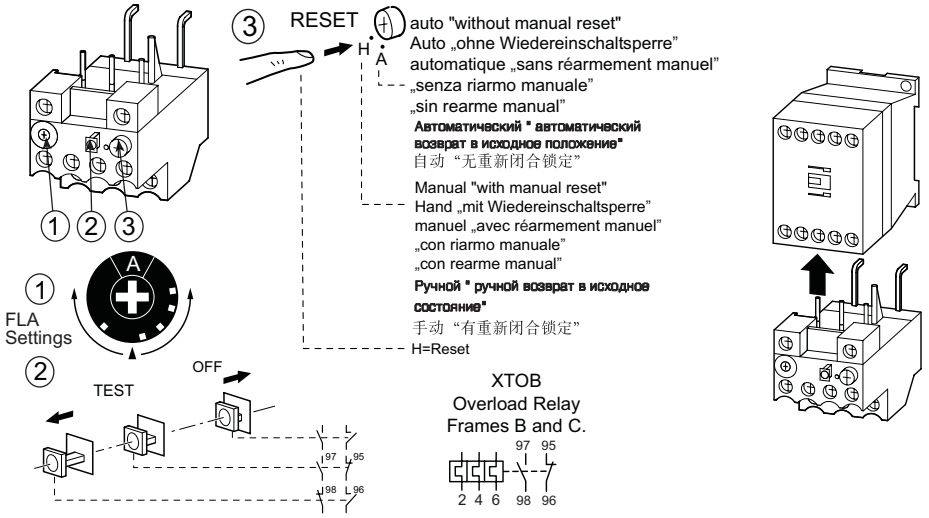


| | T1, T2, T3 | | 95/96, 97/98 | |
|---|---|---|---|---|
| **XTOB...BC1 XTOB---CC1** | mm2 | | mm2 | |
| | min. | max. | min. | max. |
| | 1 | 6 | 0,75 | 4 |
| | 1 | 6 | 0,75 | 2,5 |
| | 1 | 6 | 0,75 | 4 |
| | 1 | 6 | 0,75 | 2,5 |

| | T1, T2, T3 | | 95/96, 97/98 | |
|---|---|---|---|---|
| **XTOB...BC1 XTOB...CC1** | AWG | | AWG | |
| | min. | max. | min. | max. |
| | 14 | 8 | 18 | 12 |
| | 14 | 8 | 18 | 12 |

**OVERLOAD RELAY TORQUE SPECIFICATIONS**

| XTOB...BC1 XTOB...CC1 | T1, T2, T3 | |
|---|---|---|
| Nm | 1.8 | 1.2 |
| lb-in | 16 | 11 |

**OVERLOAD TO CONTACTOR TORQUE**

| | FRAME B | FRAME C |
|---|---|---|
| Nm | 1.2 | 3.2 |
| lb-in | 11 | 28 |

**Ultimate trip at 1.15 FLA (1 Phase)**
**Grenzauslösestrom 1.15 % (Phasenausfallempfindlichkeit)**
**Sensibilité au manque de phase (115 % du courant de réglage)**
**Valore limite della corrente di intervento 115 % (Sensibilità alla mancanza fase)**
**Intensidad límite de disparo 115 % (Sensibilidad al defecto de fase)**
**Предельный ток срабатывания 115 % (чувствительность к выпадению фазы)**
极限断开电源

**Ultimate trip at 1.20 FLA (3 Phase)**
**Grenzauslösestrom 120 % (3 Phasen)**
**Courant limite de declenchement 120% (3 phases)**
**Valore limite della corrente di intervento 120 % (3 fasi)**
**Intersidad límite de disparo 120 % (3 fases)**
**Предельный ток срабатывания 120 % (3 фазы)**
保留更改权

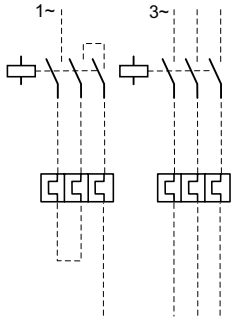


| XTOB...BC1, XTOB...CC1 Cat. No. | | "1" gL max. A | "2" gL max. A | "1" aM max. A | | |
|---|---|---|---|---|---|---|
| XTOBPI6 | 0.1 - 0.16 | 25 | 0.5 | - | | |
| XTOBP24 | 0.16 - 0.24 | 25 | 1 | - | | |
| XTOBP40 | 0.24 - 0.4 | 25 | 2 | - | | |
| XTOBP60 | 0.4 - 0.6 | 25 | 4 | - | | |
| XTOB001 | 0.6 - 1.0 | 25 | 4 | - | | |
| XTOB1P6 | 1.0 - 1.6 | 25 | 6 | - | | |
| XTOB2P4 | 1.6 - 2.4 | 25 | 10 | - | | |
| XTOB004 | 2.4 - 4 | 25 | 16 | - | | |
| XTOB006 | 4 - 6 | 25 | 20 | - | | |
| XTOB010 | 6 - 10 | 50 | 25 | 20 | | |
| XTOB012 | 9 - 12 | 50 | 25 | 25 | | |
| XTOB016 | 10 - 16 | 63 | 35 | 25 | | |
| XTOB024 | 16 - 24 | 100 | 35 | 50 | | |
| XTOB032 | 24 - 32 | 125 | 63 | 50 | | |

THE INFORMATION ON THIS DRAWING IS THE PROPERTY OF EATON | Cutler-Hammer, IS DISCLOSED IN CONFIDENCE AND IS NOT TO BE REPRODUCED, USED OR DISCLOSED EXCEPT FOR THE PURPOSE FOR WHICH FURNISHED.

| DWG. NO. | REVISION | SHEET NO. |
|---|---|---|
| PUB51670 | 01 | 1 OF 1 |

FILETYPE: EXCEL | EATON | Cutler-Hammer

MILWAUKEE OPERATIONS & TECHNICAL CENTER - MILWAUKEE, WI

NEW

TITLE: **XTOB OVERLOAD RELAY FRAME B AND C**

PRODUCT CODE: XT-1

| DR. | CHK. | APP. | DATE | ECN NO. | DEV. NO. |
|---|---|---|---|---|---|
| M. DOWSKE | B. WENNINGER | M. SCHUBRING | 18-Sep-06 | XT#10201 | 129-1657 |

| Part / Asm No. | ( 30 Characters Max. ) Description | Stocking U/M |
|---|---|---|
| PUB51670 | XTOB OVERLOAD RELAY FR B & C | EA |

MAPICS™ Sites: MK3

NOTES:
1) PRINT ON OPAQUE WHITE 20 LB. PAPER
2) FINISHED PUB WIDTH 135,0 ± 6 [5.3" ± .25"] X HEIGHT OF 254,0 ± 6 [10.0" ± .25"], WITH 3,0 [0.12] - 7,0 [0.28] WHITE SPACE AROUND EDGES.
3) VISUALLY INSPECT PRINTED PUBLICATIONS FOR CLARITY, NO FADE PERMITTED.
4) HIGH RESOLUTION PDF FILE FOR PRINTING OF PUBLICATION TO BE PROVIDED.

RoHS COMPLIANT

| APP. | MS |
|---|---|
| DATE | 03-12-06 |

| MAPICS Parts List Items | | | Unit of Measure (U/M) | Quantities | | | | | | | | | |
|---|---|---|---|---|---|---|---|---|---|---|---|---|---|
| Item Balloon | Item Part No. | ( 30 Characters Max. ) Item Description | | PUB51670 | | | | | | | | | |
| 001 | | | | | | | | | | | | | |
| 002 | | | | | | | | | | | | | |
| 003 | | | | | | | | | | | | | |
| 004 | | | | | | | | | | | | | |
| 005 | | | | | | | | | | | | | |
| 006 | | | | | | | | | | | | | |
| 007 | | | | | | | | | | | | | |
| 008 | | | | | | | | | | | | | |
| 009 | | | | | | | | | | | | | |
| 010 | | | | | | | | | | | | | |

**Do Not Print This Page.**

ITEMS BELOW THIS POINT ARE REFERENCE SPECIFICATONS

| | | | | | | | | | | | | | |
|---|---|---|---|---|---|---|---|---|---|---|---|---|---|
| 999 | 50-2500 | DIMENSIONING & TOLERANCE SPEC. | EA | REF | | | | | | | | | |



This Uncontrolled Copy Was Printed On: 18-Sep-06

# EATON | Cutler-Hammer

# XTOB Overload Relay Frame B and C

**Dangerous Electrial Current!** Only skilled or qualified persons may carry out the following operations.
**Lebensgefahr durch elektrischen Strom!** Nur Elektrofachkräfte und elektrotechnisch unterwiesene Personen düfen die im Folgenden beschriebenen Arbeiten ausführen.
**Tension électrique dangereuse !** Seules les personnes qualifées et averties doivent exécuter les travaux ci-après.
**Tensione elettrica: Pericolo di morte!** Solo persone abilitate e qualificate possono eseguire le operazioni di seguito riportate.
**¡Corriente eléctrica! ¡Peligro de muerte!** El trabajo a continuación descrito debe ser realizado por personas cualificadas y advertidas.
**Электрический ток! Опасно для жизни!** Только специалисты или проинструктированные лица могут выполнять следующие операции.

**Warning!** Motor may start automatically. Automatic start may injure persons and damage machines. Automatic restart is possible when "automatic reset" is active.

**Warnung!** Automatischer Wiederanlauf des Motors kann zu Personen- und Sachschäden führen. Die Gefahr des automatischen Wiederanlaufs ist in der Betriebsart "Automatische Rückstellung" gegeben.

**Avertissement !** Le redémarrage automatique du moteur peut provoquer des dégâts matériels et étre dangereux pour les personnes. Ce danger du redémarrage automatique correspond au mode «réarmement.

**Avvertimento!** Il riavvio automatico del motore può provocare danni a persone e/o cose. Il pericolo del riavvio automatico si ha quandoll selettore è posizionato su "riarmo automatico".

**Advertencia!** El motor puede arrancar automaticamente. Elarranque automático es posible cuando el "botón de reset" está en posicion automático y el circuito de maniobra activado.

**Осторожно! Автоматический повторный пуск электродвигателя может привести к травматизму персонала и материальному ущербу. Автоматический запуск двигателя возможен при включенном " Автоматическом возврате в исходное положение".**
警告！发动机的自动转动有可能导致人员和财产的损失。
如果调到"自动返回原位"的位置,可能会出现自动转动的危险。

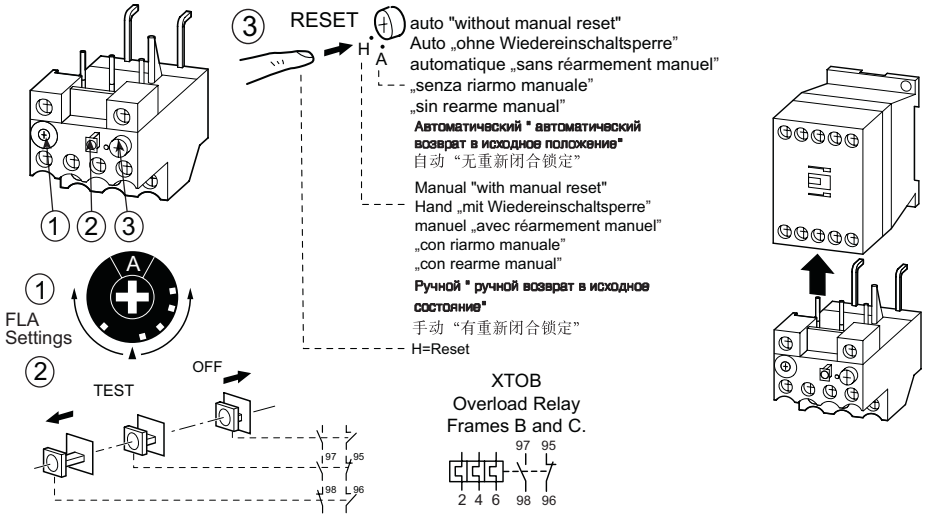


| | T1, T2, T3 | | 95/96, 97/98 | |
|---|---|---|---|---|
| **XTOB...BC1 XTOB---CC1** | mm2 | | mm2 | |
| | min. | max. | min. | max. |
| | 1 | 6 | 0,75 | 4 |
| | 1 | 6 | 0,75 | 2,5 |
| | 1 | 6 | 0,75 | 4 |
| | 1 | 6 | 0,75 | 2,5 |

| | T1, T2, T3 | | 95/96, 97/98 | |
|---|---|---|---|---|
| **XTOB...BC1 XTOB...CC1** | AWG | | AWG | |
| | min. | max. | min. | max. |
| | 14 | 8 | 18 | 12 |
| | 14 | 8 | 18 | 12 |

**OVERLOAD RELAY TORQUE SPECIFICATIONS**

| XTOB...BC1 XTOB...CC1 | T1, T2, T3 | |
|---|---|---|
| Nm | 1.8 | 1.2 |
| lb-in | 16 | 11 |

**OVERLOAD TO CONTACTOR TORQUE**

| | FRAME B | FRAME C |
|---|---|---|
| Nm | 1.2 | 3.2 |
| lb-in | 11 | 28 |

**Ultimate trip at 1.15 FLA (1 Phase)**
**Grenzauslösestrom 1.15 % (Phasenausfallempfindlichkeit)**
**Sensibilité au manque de phase (115 % du courant de réglage)**
**Valore limite della corrente di intervento 115 % (Sensibilità alla mancanza fase)**
**Intensidad límite de disparo 115 % (Sensibilidad al defecto de fase)**
**Предельный ток срабатывания 115 % (чувствительность к выпадению фазы)**
极限断开电源

**Ultimate trip at 1.20 FLA (3 Phase)**
**Grenzauslösestrom 120 % (3 Phasen)**
**Courant limite de declenchement 120% (3 phases)**
**Valore limite della corrente di intervento 120 % (3 fasi)**
**Intersidad límite de disparo 120 % (3 fases)**
**Предельный ток срабатывания 120 % (3 фазы)**
保留更改权

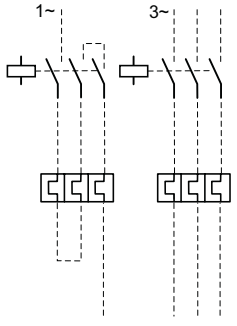


| XTOB...BC1, XTOB...CC1 Cat. No. | | "1" gL max. A | "2" gL max. A | "1" aM max. A | | |
|---|---|---|---|---|---|---|
| XTOBPI6 | 0.1 - 0.16 | 25 | 0.5 | - | | |
| XTOBP24 | 0.16 - 0.24 | 25 | 1 | - | | |
| XTOBP40 | 0.24 - 0.4 | 25 | 2 | - | | |
| XTOBP60 | 0.4 - 0.6 | 25 | 4 | - | | |
| XTOB001 | 0.6 - 1.0 | 25 | 4 | - | | |
| XTOB1P6 | 1.0 - 1.6 | 25 | 6 | - | | |
| XTOB2P4 | 1.6 - 2.4 | 25 | 10 | - | | |
| XTOB004 | 2.4 - 4 | 25 | 16 | - | | |
| XTOB006 | 4 - 6 | 25 | 20 | - | | |
| XTOB010 | 6 - 10 | 50 | 25 | 20 | | |
| XTOB012 | 9 - 12 | 50 | 25 | 25 | | |
| XTOB016 | 10 - 16 | 63 | 35 | 25 | | |
| XTOB024 | 16 - 24 | 100 | 35 | 50 | | |
| XTOB032 | 24 - 32 | 125 | 63 | 50 | | |

**Manual Motor Protectors**

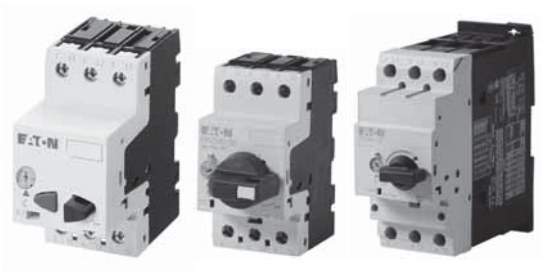

## Contents


| *Description* | *Page* |
|---|---|
| Relays and Timers | **V5-T1-3** |
| Miniature Controls | **V5-T1-18** |
| Contactors and Starters | **V5-T1-35** |
| Thermal Overload Relays | **V5-T1-128** |
| C440/*XT* Electronic Overload Relay | **V5-T1-141** |
| Manual Motor Protectors | |
| Features and Benefits | **V5-T1-158** |
| Standards and Certifications | **V5-T1-158** |
| Product Identification | **V5-T1-159** |
| Catalog Number Selection | **V5-T1-160** |
| Product Selection | **V5-T1-161** |
| Accessories | **V5-T1-164** |
| Technical Data and Specifications | **V5-T1-176** |
| Dimensions | **V5-T1-185** |
| Combination Motor Controllers | **V5-T1-193** |
| *XT* Electronic Manual Motor Protector | **V5-T1-216** |
| EMS—Electronic Motor Starter | **V5-T1-229** |
| Reference Data | **V5-T1-231** |


# Manual Motor Protectors

## Product Description

Eaton's new ***XT*** family of manual motor protectors (MMPs) features a pushbutton or rotary ON/OFF manual disconnect, Class 10 adjustable bimetallic overload relay and fixed magnetic short-circuit trip capability in one compact unit. Two frame sizes are available: Frame B (45 mm) for motors with FLA ratings up to 32A and Frame D (55 mm) covers motor FLA ratings up to 65A.

## Application Description

The XTPB and XTPR MMPs can be used in the following applications.

### *Motor Protective Circuit Breaker*

In many countries outside of the United States and Canada, especially Europe, the MMPs are tested and classified as thermal-magnetic circuit breakers for use in motor branch circuits. This can be an important consideration for all companies who export their equipment and machines internationally. Both the XTPB and XTPR conform to IEC/EN 60947 and have the CE Mark.

### *Manual Motor Protectors*

The XTPB and XTPR MMPs are UL listed under UL 508 as manual motor protectors. They provide an economical solution for applications requiring simple manual starting and stopping of motors. When used as a manual starter, they are typically installed in an enclosure. Many enclosures are offered as accessories for the MMPs. Separate short-circuit protective devices, such as circuit breakers or fuses, are wired ahead of the MMPs. The short-circuit protective device should be sized per the NEC and should not exceed 400% of the maximum FLA dial setting of the MMP.

### *Group Motor Installations*

A group motor installation can be defined as more than one motor circuit protected by a single set of fuses or circuit breaker on a motor branch circuit. This eliminates the need for individual fuses or circuit breakers for each motor circuit. Substantial component cost savings, panel space savings and reduced wiring installation time can be achieved in group motor installations.

The MMPs are tested and listed for group installation. If remote operation is required, a magnetic contactor can be wired in series with the MMP.

Article 430.53 of the NEC contains the rules and requirements for group motor installations. Refer to application note AP03402001E for NEC requirement for group motor installation.

### *Individual Branch Motor Applications*

A UL 508 Type E self-protected manual combination starter/motor controller consists of a single device possessing four essential elements: disconnect, short circuit protection, motor controller, and motor overload protection. Some MMPs require use of a lineside adapter for this type of approval. When tested as an official combination by UL, this device takes the place of a fuse-starter or breaker-starter, ***XT*** Type E MMPs are self-protected, meaning they do not need additional short circuit protection of a fuse or breaker. Type E devices can also be used with a contactor or other types of UL approved controllers. If tested with a contactor, the combination motor controller becomes a Type F device. See **Page V5-T1-199** for XTFC Type F devices.

1

## Features and Benefits

- ON/OFF rotary handle with lockout provision
- Visible trip indication
- Class 10 overload protection
- Phase loss sensitivity
- Ambient temperature compensation to IEC/EN 60947, VDE 0660
- Fixed short-circuit trip—14 times maximum setting of overload FLA dial
- Type 2 coordination per IEC 947
- Identification markers standard on starter faceplate
- Motor applications from 0.1A to 65A
- Built-in heater and magnetic trip elements to protect the motor
- Adjustment dial for setting motor FLA
- DIN rail mount
- Terminal types available:
  - Screw terminals
  - Screw (line) and spring cage (load) terminals
  - Spring cage terminals
- Accessories include:
  - Front and side auxiliary contacts
  - Trip indicating contacts
  - Tamperproof cover for OLR dial
  - Undervoltage release
  - Shunt trip
  - Through-the-door operators
  - Enclosures
  - Three-phase line side connecting links

## Standards and Certifications

- CE approved
- UL listed File No. E245398
- UL 508 group motor and Type E compliant
- IEC/EN 60947
- CSA File 229767, Class 3211-05
- DIN VDE 0660 Part 100, Part 101 and Part 102

**Note:** For Type 2 Coordination of MMCs, see **Page V5-T1-232**.

## Line Side Adapters—When to Use Them

**Note:** Line side adapters are not required for non-US applications. Most countries outside of the US classify the MMP as a thermal magnetic circuit breaker.

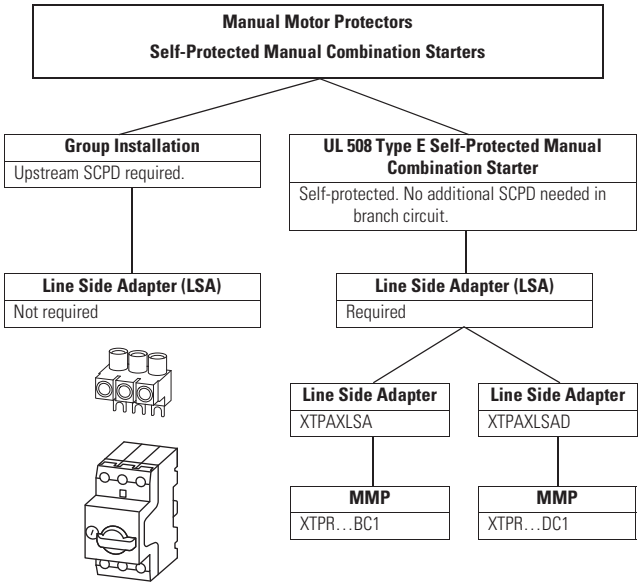


**Manual Motor Protector and Line Side Adapter**

## Product Identification

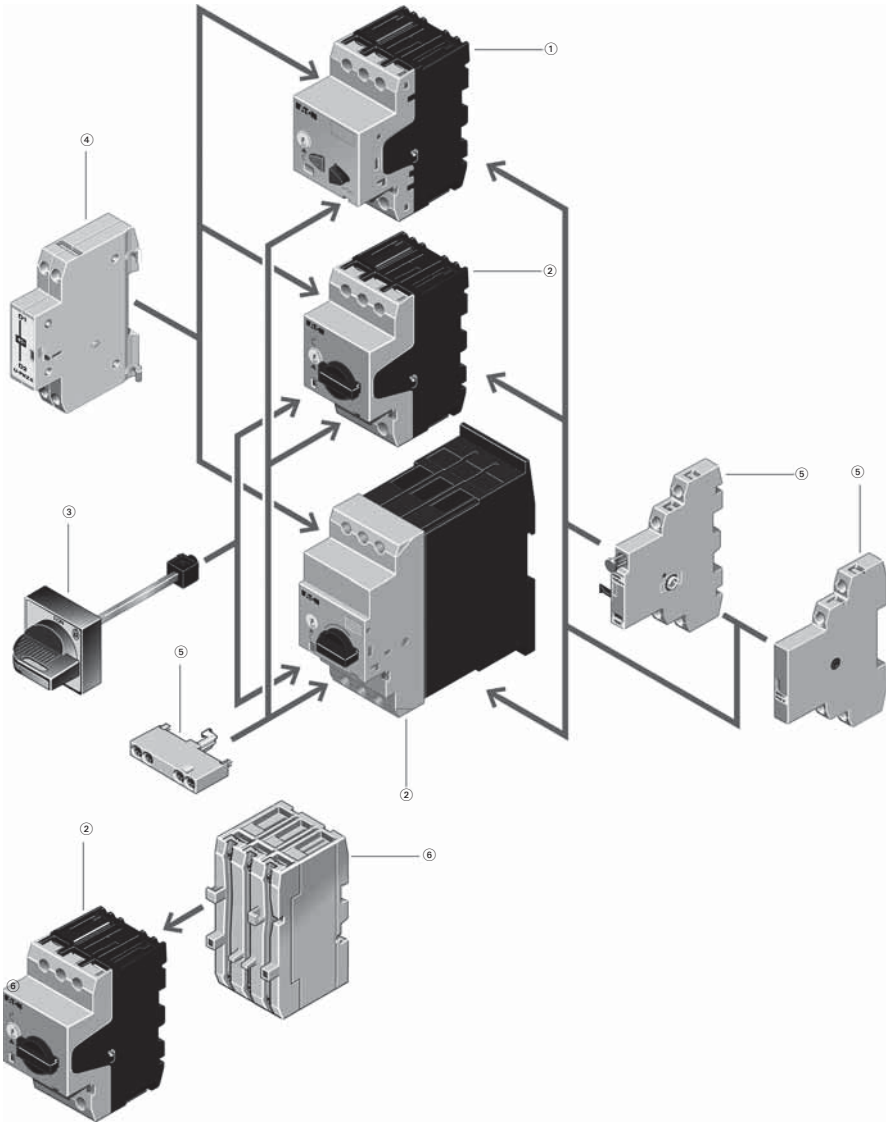


***Notes***

**Basic Units**

① XTPB pushbutton manual motor protectors (see **Page V5-T1-161**)
- Rated operational current up to 25A
- Switching capacity 50 kA/415V
- Short-circuit release, adjustable 0.6–1 x $I_u$
- Single-phasing sensitive

② XTPR rotary manual motor protectors (see **Page V5-T1-162**)
- Rated operational current up to 32A, 65A
- Switching capacity 150/50 kA/415V
- Short-circuit release, fixed setting to 14 x $I_u$
- Overload release, adjustable 0.6–1 x $I_u$
- Single-phasing sensitive
- With screws or spring-loaded terminals

**Mounting Accessories**

③ Rotary handle mechanism (see **Page V5-T1-167**)
- ON/OFF/tripped switch position indication
- Lockable door/cover interlock
- Extendable y plug fit extension shaft
- Handle latched in switch positions
- Optionally also without locking and door interlock function

Insulated enclosures (see **Page V5-T1-171**)
- Surface mounting, enclosures, IP40, IP55 and IP40 and IP55 front flush mounting enclosure

Mounting/wiring (see **Page V5-T1-167**)
- Component adapter for busbar mounting
- Three-phase commoning link for side-by-side-mounting
- Mounting kits for rapid mounting of direct-on-line, reversing and star-delta starters

**Add-On Functions**

④ Voltage releases (see **Page V5-T1-166**)
- Undervoltage release
- Shunt releases
- With screws or spring-loaded terminals

⑤ Standard auxiliary contacts (see **Page V5-T1-164**)
- ON/OFF indication
- Differential fault indication overload/short-circuit release
- ON/OFF for (high capacity) contact module
- ON/OFF for starter combination
- With early-make contacts
- With screws or spring-loaded terminals

⑥ Current limiter (see **Page V5-T1-166**)
- Increases the switching capacity of the 10–25A manual motor protectors to 100 kA/440V
- Can be used for individual group protection

1

## Catalog Number Selection

### *XT* Manual Motor Protectors

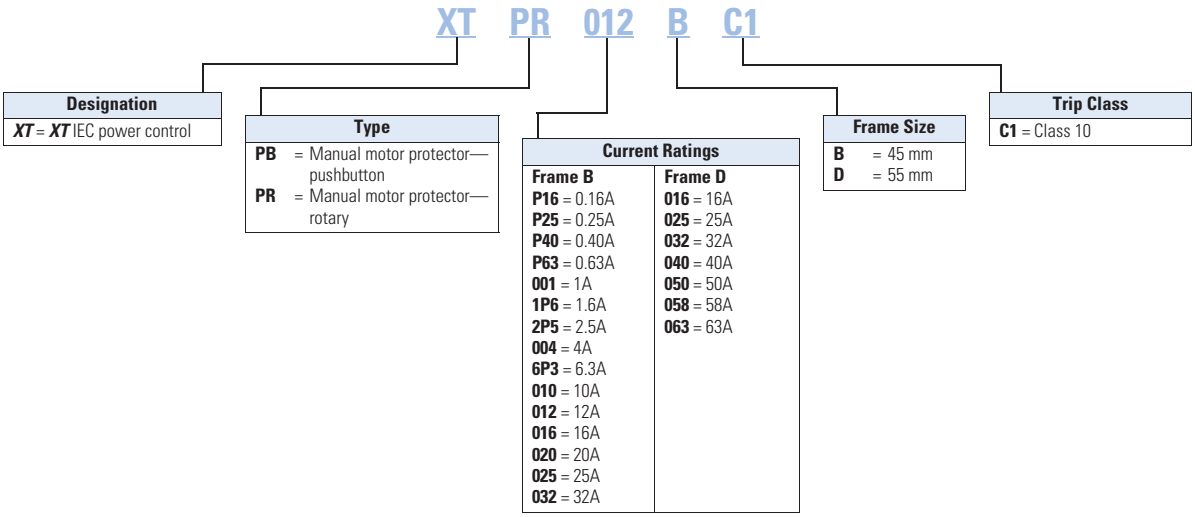

## Product Selection

### *Product Selection for Manual Motor Starter Applications*

When ordering, specify catalog numbers according to the following stipulations:

***XT*** manual motor protectors are selected based on the overload current range required for a given motor. This current range is determined from the motor full load ampere rating and motor service factor usually found on the motor nameplate.

**For motors with service factors less than 1.15,** multiply the motor FLA by 0.90 to select appropriate MMP.

Example: For motor having FLA of 6.4A and service factor of 1.0 (6.4A x 0.90 = 5.76A) select catalog number XTPB6P3B01.

See Application Note—AP03402001E.

**For motor with service factor of 1.15 or greater,** use motor nameplate full load amperes to select the appropriate MMP.

Example: For motor having FLA of 11A and service factor of 1.15, select catalog number XTPR012BC1.

**Frame B**



### XTPB Pushbutton Manual Motor Protectors—Global and North American Ratings—Frame B

Type 1 and Type 2 Coordination Motor Protective Device with Thermal and Magnetic Trip

| Rated Uninterrupted Current— $I_u = I_e$ (Amps) | FLA Adjustment Range/ Overload Release— $I_r$ (Amps) | Short Circuit Release— $I_{rm}$ (Amps) | Maximum Motor Ratings ① Maximum kW Rating AC-3—P (kW) Three-Phase | | | | | Maximum hp Rating—P (hp) UL 508/CSA C22.2 No. 14 Three-Phase | | | | Screw Terminal Catalog Number |
|---|---|---|---|---|---|---|---|---|---|---|---|---|
| | | | 220–240V | 380–415V | 440V | 500V | 660–690V | 200V | 240V | 480V | 600V | |
| 0.16 | 0.1–0.16 | 2.2 | — | — | — | — | 0.06 | ② | ② | ② | ② | **XTPBP16BC1** |
| 0.25 | 0.16–0.25 | 3.5 | — | 0.06 | 0.06 | 0.06 | 0.12 | ② | ② | ② | ② | **XTPBP25BC1** |
| 0.4 | 0.25–0.4 | 5.6 | 0.06 | 0.09 | 0.12 | 0.12 | 0.18 | ② | ② | ② | ② | **XTPBP40BC1** |
| 0.63 | 0.4–0.63 | 8.8 | 0.09 | 0.12 | 0.18 | 0.25 | 0.25 | ② | ② | ② | ② | **XTPBP63BC1** |
| 1 | 0.63–1 | 14 | 0.12 | 0.25 | 0.25 | 0.37 | 0.55 | ② | ② | 2 | 1/2 | **XTPB001BC1** |
| 1.6 | 1–1.6 | 22 | 0.25 | 0.55 | 0.55 | 0.75 | 1.1 | ② | ② | 3/4 | 3/4 | **XTPB1P6BC1** |
| 2.5 | 1.6–2.5 | 35 | 0.37 | 0.75 | 1.1 | 1.1 | 1.5 | 1/2 | 1/2 | 1 | 1-1/2 | **XTPB2P5BC1** |
| 4 | 2.5–4 | 56 | 0.75 | 1.5 | 1.5 | 2.2 | 3 | 3/4 | 3/4 | 2 | 3 | **XTPB004BC1** |
| 6.3 | 4–6.3 | 88 | 1.1 | 2.2 | 3 | 3 | 4 | 1 | 1-1/2 | 3 | 5 | **XTPB6P3BC1** |
| 10 | 6.3–10 | 140 | 2.2 | 4 | 4 | 4 | 7.5 | 3 | 3 | 7-1/2 | 10 | **XTPB010BC1** |
| 12 | 8–12 | 168 | 3 | 5.5 | 5.5 | 5.5 | 11 | 3 | 3 | 7-1/2 | 10 | **XTPB012BC1** |
| 16 | 10–16 | 224 | 4 | 7.5 | 9 | 9 | 12.5 | 3 | 5 | 10 | 10 | **XTPB016BC1** |
| 20 | 16–20 | 280 | 5.5 | 9 | 11 | 12.5 | 15 | 5 | — | — | 15 | **XTPB020BC1** |
| 25 | 20–25 | 350 | 5.5 | 12.5 | 12.5 | 15 | 22 | — | 7-1/2 | 15 | 20 | **XTPB025BC1** |

***Notes***

Single-phasing sensitivity to IEC/EN 60947-4-1, VDE 0660 Part 102.

Can be snap-fit to IEC/EN 60715 top-hat (DIN) with 7.5 or 15 mm height.

Service Factor (SF)—Setting $I_r$ of current scale in dependence of load factor:
SF = 1.15 → $I_r = 1 \times I_{n\ mot}$
SF = 1 → $I_r = 0.9 \times I_{n\ mot}$

For manual motor protective circuit breaker switching capacity, see **Page V5-T1-181**.

① Select manual motor protectors by full load amperes. Maximum motor ratings (kW, hp) are for reference only.

② In this range, calculate motor rating according to rated current. Specified values to NEC 430.6(A)(1).

Frame B



## XTPR Rotary Manual Motor Protectors with Screw Terminals—Global Ratings and North American Ratings—Frame B

Type 1 and Type 2 Coordination Motor Protective Device with Thermal and Magnetic Trip

| Rated Uninterrupted Current—$I_u = I_e$ (Amps) | FLA Adjustment Range/ Overload Release—$I_r$ (Amps) | Short Circuit Release—$I_{rm}$ (Amps) | Maximum Motor Ratings ① Maximum kW Rating AC-3—P (kW) Three-Phase 220–240V | 380–415V | 440V | 500V | 660–690V | Maximum hp Rating—P (hp) UL 508/CSA C22.2 No. 14 Three-Phase 200V | 240V | 480V | 600V | Screw Terminal Catalog Number |
|---|---|---|---|---|---|---|---|---|---|---|---|---|
| 0.16 | 0.1–0.16 | 2.2 | — | — | — | — | 0.06 | ② | ② | ② | ② | **XTPRP16BC1** |
| 0.25 | 0.16–0.25 | 3.5 | — | 0.06 | 0.06 | 0.06 | 0.12 | ② | ② | ② | ② | **XTPRP25BC1** |
| 0.4 | 0.25–0.4 | 5.6 | 0.06 | 0.09 | 0.12 | 0.12 | 0.18 | ② | ② | ② | ② | **XTPRP40BC1** |
| 0.63 | 0.4–0.63 | 8.8 | 0.09 | 0.12 | 0.18 | 0.25 | 0.25 | ② | ② | ② | ② | **XTPRP63BC1** |
| 1 | 0.63–1 | 14 | 0.12 | 0.25 | 0.25 | 0.37 | 0.55 | ② | ② | ② | ② | **XTPR001BC1** |
| 1.6 | 1–1.6 | 22 | 0.25 | 0.55 | 0.55 | 0.75 | 1.1 | ② | ② | 3/4 | 3/4 | **XTPR1P6BC1** |
| 2.5 | 1.6–2.5 | 35 | 0.37 | 0.75 | 1.1 | 1.1 | 1.5 | 1/2 | 1/2 | 1 | 1-1/2 | **XTPR2P5BC1** |
| 4 | 2.5–4 | 56 | 0.75 | 1.5 | 1.5 | 2.2 | 3 | 3/4 | 3/4 | 2 | 3 | **XTPR004BC1** |
| 6.3 | 4–6.3 | 88 | 1.1 | 2.2 | 3 | 3 | 4 | 1 | 1-1/2 | 3 | 5 | **XTPR6P3BC1** |
| 10 | 6.3–10 | 140 | 2.2 | 4 | 4 | 4 | 7.5 | 3 | 3 | 7-1/2 | 10 | **XTPR010BC1** |
| 12 | 8–12 | 168 | 3 | 5.5 | 5.5 | 5.5 | 11 | 3 | 3 | 7-1/2 | 10 | **XTPR012BC1** |
| 16 | 10–16 | 224 | 4 | 7.5 | 9 | 9 | 12.5 | 3 | 5 | 10 | 10 | **XTPR016BC1** |
| 20 | 16–20 | 280 | 5.5 | 9 | 11 | 12.5 | 15 | 5 | — | — | 15 | **XTPR020BC1** |
| 25 | 20–25 | 350 | 5.5 | 12.5 | 12.5 | 15 | 22 | — | 7-1/2 | 15 | 20 | **XTPR025BC1** |
| 32 | 25–32 | 448 | 7.5 | 15 | 15 | 22 | 30 | 7-1/2 | 10 | 20 | 25 | **XTPR032BC1** |

Frame D



## XTPR Rotary Manual Motor Protectors with Screw Terminals—Global Ratings and North American Ratings—Frame D

Type 1 and Type 2 Coordination Motor Protective Device with Thermal and Magnetic Trip

| Rated Uninterrupted Current—$I_u = I_e$ (Amps) | FLA Adjustment Range/ Overload Release—$I_r$ (Amps) | Short Circuit Release—$I_{rm}$ (Amps) | Maximum Motor Ratings ① Maximum kW Rating AC-3—P (kW) Three-Phase 220–240V | 380–415V | 440V | 500V | 660–690V | Maximum hp Rating—P (hp) UL 508/CSA C22.2 No. 14 Three-Phase 200V | 240V | 480V | 600V | Screw Terminal Catalog Number |
|---|---|---|---|---|---|---|---|---|---|---|---|---|
| 16 | 10–16 | 224 | 4 | 7.5 | 9 | 9 | 12.5 | 3 | 5 | 10 | 15 | **XTPR016DC1** |
| 25 | 16–25 | 350 | 5.5 | 12.5 | 12.5 | 15 | 22 | 7-1/2 | 7-1/2 | 15 | 20 | **XTPR025DC1** |
| 32 | 25–32 | 448 | 7.5 | 15 | 17.5 | 22 | 22 | 10 | 10 | 20 | 30 | **XTPR032DC1** |
| 40 | 32–40 | 560 | 11 | 20 | 22 | 24 | 30 | 10 | 15 | 30 | 30 | **XTPR040DC1** |
| 50 | 40–50 | 700 | 14 | 25 | 30 | 30 | 45 | 10 | 15 | 30 | 40 | **XTPR050DC1** |
| 58 | 50–58 | 812 | 17 | 30 | 37 | 37 | 55 | 15 | 15 | 40 | 50 | **XTPR058DC1** |
| 65 | 55–65 | 882 | 18.5 | 34 | 37 | 45 | 55 | 15 | 15 | 40 | 50 | **XTPR063DC1** |

***Notes***

Single-phasing sensitivity to IEC/EN 60947-4-1, VDE 0660 Part 102.

Can be snap-fit to IEC/EN 60715 top-hat (DIN) with 7.5 or 15 mm height.

Service Factor (SF)—Setting $I_r$ of current scale in dependence of load factor:

SF = 1.15 → $I_r = 1 \times I_{n\ mot}$

SF = 1 → $I_r = 0.9 \times I_{n\ mot}$

For manual motor protective circuit breaker switching capacity, see **Page V5-T1-181**.

① Select manual motor protectors by full load amperes. Maximum motor ratings (kW, hp) are for reference only.

② In this range, calculate motor rating according to rated current. Specified values to NEC 430.6(A)(1).

Frame B



## XTPR Manual Self-Protected Motor Starters—North American Ratings, UL 508 Type E—Frame B ①

Motor Protective Device with Thermal and Magnetic Trip

| Rated Uninterrupted Current—$I_u$ (Amps) | FLA Adjustment Range/ Overload Release—$I_r$ (Amps) | Short Circuit Release—$I_{rm}$ (Amps) | Maximum Motor Ratings ② Maximum hp Rating—P (hp) Three-Phase 200V | 240V | 480V/ 277V | 600V/ 247V | Rated Short-Circuit Breaking Capacity (kA) 480/ 277V | 600/ 347V | Line Side Adapter ① Catalog Number | Manual Motor Protector—Screw Terminal Catalog Number |
|---|---|---|---|---|---|---|---|---|---|---|
| 0.16 | 0.1–0.16 | 2.2 | ③ | ③ | 1/2 | 1/2 | 50 | 50 | **XTPAXLSA** | **XTPRP16BC1** |
| 0.25 | 0.16–0.25 | 3.4 | ③ | ③ | 1/2 | 1/2 | 50 | 50 | **XTPAXLSA** | **XTPRP25BC1** |
| 0.4 | 0.25–0.4 | 5.6 | ③ | ③ | 1/2 | 1/2 | 50 | 50 | **XTPAXLSA** | **XTPRP40BC1** |
| 0.63 | 0.4–0.63 | 8.8 | ③ | ③ | 1/2 | 1/2 | 50 | 50 | **XTPAXLSA** | **XTPRP63BC1** |
| 1 | 0.63–1 | 14 | ③ | ③ | 1/2 | 1/2 | 50 | 50 | **XTPAXLSA** | **XTPR001BC1** |
| 1.6 | 1–1.6 | 22 | ③ | ③ | 3/4 | 3/4 | 50 | 50 | **XTPAXLSA** | **XTPR1P6BC1** |
| 2.5 | 1.6–2.5 | 35 | 1/2 | 1/2 | 1 | 1-1/2 | 50 | 50 | **XTPAXLSA** | **XTPR2P5BC1** |
| 4 | 2.5–4 | 56 | 3/4 | 1 | 2 | 3 | 50 | 50 | **XTPAXLSA** | **XTPR004BC1** |
| 6.3 | 4–6.3 | 88 | 1 | 1-1/2 | 3 | 5 | 65 | 50 | **XTPAXLSA** | **XTPR6P3BC1** |
| 10 | 6.3–11 | 140 | 3 | 3 | 7-1/2 | 10 | 65 | 50 | **XTPAXLSA** | **XTPR010BC1** |
| 12 | 8–12 | 168 | 3 | 3 | 7-1/2 | — | 65 | — | **XTPAXLSA** | **XTPR012BC1** |
| 16 | 10–16 | 224 | 3 | 5 | 10 | — | 42 | — | **XTPAXLSA** | **XTPR016BC1** |
| 20 | 16–20 | 280 | 5 | 5 | — | — | 18 | — | **XTPAXLSA** | **XTPR020BC1** |
| 25 | 20–25 | 350 | 5 | 7-1/2 | 15 | — | 18 | — | **XTPAXLSA** | **XTPR025BC1** |
| 32 | 25–32 | 448 | 7-1/2 | 10 | 25 | — | 18 | — | **XTPAXLSA** | **XTPR032BC1** |

Frame D



## XTPR Manual Self-Protected Motor Starters—North American Ratings, UL 508 Type E—Frame D ①

Motor Protective Device with Thermal and Magnetic Trip

| Rated Uninterrupted Current—$I_u$ (Amps) | FLA Adjustment Range/ Overload Release—$I_r$ (Amps) | Short Circuit Release—$I_{rm}$ (Amps) | Maximum Motor Ratings ② Maximum hp Rating—P (hp) Three-Phase 200V | 240V | 480V/ 277V | 600V/ 247V | Rated Short-Circuit Breaking Capacity (kA) 240V | 480/ 277V | 600/ 347V | Line Side Adapter ① Catalog Number | Manual Motor Protector—Screw Terminal Catalog Number |
|---|---|---|---|---|---|---|---|---|---|---|---|
| 16 | 10–16 | 224 | 3 | 5 | 10 | 10 | 65 | 65 | 25 | **XTPAXLSAD** | **XTPR016DC1** |
| 25 | 16–25 | 350 | 7-1/2 | 7-1/2 | 20 | 25 | 65 | 65 | 25 | **XTPAXLSAD** | **XTPR025DC1** |
| 32 | 25–32 | 448 | 10 | 10 | 25 | 30 | 65 | 65 | 25 | **XTPAXLSAD** | **XTPR032DC1** |
| 40 | 32–40 | 560 | 10 | — | 30 | 30 | 65 | 65 | 25 | **XTPAXLSAD** | **XTPR040DC1** |
| 50 | 40–50 | 700 | — | 15 | 30 | — | 65 | 65 | — | **XTPAXLSAD** | **XTPR050DC1** |
| 58 | 50–58 | 812 | — | — | 40 | — | 65 | 65 | — | **XTPAXLSAD** | **XTPR058DC1** |
| 65 | 55–65 | 882 | — | — | 40 | — | 65 | 65 | — | **XTPAXLSAD** | **XTPR063DC1** |

***Notes***

A UL 508 Type E self-protected manual combination starter (XTPR) consists of a manual motor protector (XTPR) and a UL Listed line side adapter (for example, XTPAXLSA). The Type E self-protected manual combination starter alone is a legitimate short-circuit protective device and disconnect means for the downstream motor, while the contactor has been added to provide remote operation of the motor circuit. Conductor size for XTPAXLSA is 14–6 AWG, XTPAXLSAD is 8 AWG–1/0.

① UL 508 Type E starters are assembled from a standard XTPR and a special incoming terminal line side adapter (XTPAXLSA or XTPAXLSAD).

② Select manual motor protectors by full load amperes. Maximum motor ratings (kW, hp) are for reference only.

③ In this range, calculate motor rating according to rated current. Specified values to NEC 430.6(A)(1).

1

## Accessories

### *Auxiliary Contacts*

**XTPAXSA_**



### Side-Mount Auxiliary Contacts

| Contact Configuration | Contact Sequence | Pkg. Qty. ① | Screw Terminal Catalog Number |
|---|---|---|---|
| 1NO-1NC | 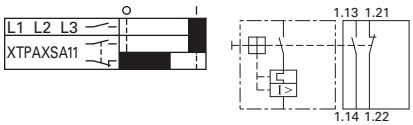 | 5 | **XTPAXSA11** |
| 1NO-2NC | 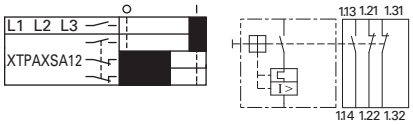 | 5 | **XTPAXSA12** |
| 2NO-1NC | 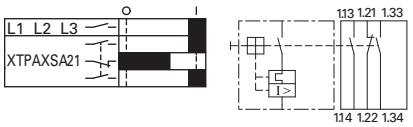 | 5 | **XTPAXSA21** |

Can be fitted on the right side of manual motor protectors (XTPB, XTPR, XTPM) and manual transformer protectors (XTPT) and can be combined with XTPAXSATR_ and XTPAXFA_ trip indicating auxiliary contact.

**XTPAXFA11**



### Front-Mount Auxiliary Contacts

| Contact Configuration | Contact Sequence | Pkg. Qty. ① | Screw Terminal Catalog Number |
|---|---|---|---|
| 1NO-1NC | 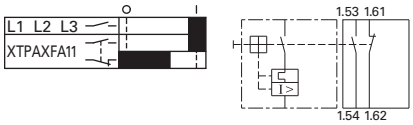 | 5 | **XTPAXFA11** |

Can be fitted to manual motor protectors (XTPB, XTPR, XTPM) and manual transformer protectors (XTPT). 45 mm (XTPR…B and XTPB) or 55 mm (XTPR…D) widths of manual motor protectors remain unchanged.

***Note***

① Orders must be placed in multiples of package quantity listed.

## Side-Mount Trip Indicating Auxiliary Contacts

**XTPAXSATR_**



| Contact Configuration | Contact Sequence | Pkg. Qty. ① | For Use with… | Catalog Number |
|---|---|---|---|---|
| 2 x 1NO | 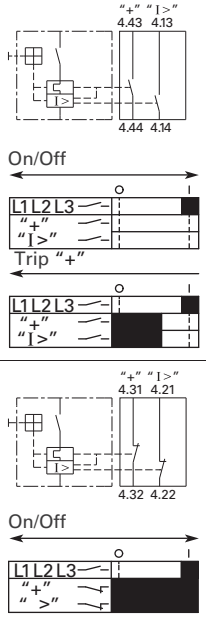 | 2 | XTPB, XTPR, XTPM, XTPT | **XTPAXSATR20** |
| 2 x 1NC |  | 2 | XTPB, XTPR, XTPM, XTPT | **XTPAXSATR02** |



Can be fitted on the right side of manual motor protectors. Can be combined with standard auxiliary contacts. Trip indication: A. General trip indication (overload) B. Short-circuit trip. Local short-circuit indication by red indicator, manually resettable.

## Early-Make Front-Mount Auxiliary Contacts

**XTPBXFAEM20**



| Contact Configuration | Contact Sequence | Pkg. Qty. ① | For Use with… | Catalog Number |
|---|---|---|---|---|
| 2NO | 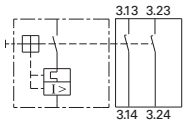 | 5 | XTPB | **XTPBXFAEM20** |



**XTPAXFAEM20**



| Contact Configuration | Contact Sequence | Pkg. Qty. ① | For Use with… | Catalog Number |
|---|---|---|---|---|
| 2NO | | 2 | XTPR, XTPM, XTPT | **XTPAXFAEM20** ② |

For use with XTPB_, Frame B XTPR and XTPT. Can be fitted to the front of a manual motor protector. 45 mm width of manual motor protector remains unchanged. For early energization of undervoltage release, for example, in emergency-stop circuits to EN 60204.

***Notes***

① Orders must be placed in multiples of package quantity listed.

② Not for use with rotary handle mechanism.

## *Additional Accessories*

### Shunt Release

**XTPAXSR_**



**Contact Sequence**

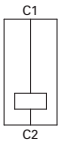


| Pkg. Qty. ① | Screw Terminal Catalog Number |
|---|---|
| 2 | **XTPAXSR24V50H** |
| 2 | **XTPAXSR48V50H** |
| 2 | **XTPAXSR110V50H** |
| 2 | **XTPAXSR120V60H** |
| 2 | **XTPAXSR208V60H** |
| 2 | **XTPAXSR220V50H** |
| 2 | **XTPAXSR230V50H** |
| 2 | **XTPAXSR240V50H** |
| 2 | **XTPAXSR240V60H** |
| 2 | **XTPAXSR380V50H** |
| 2 | **XTPAXSR400V50H** |
| 2 | **XTPAXSR415V50H** |
| 2 | **XTPAXSR440V60H** |
| 2 | **XTPAXSR480V60H** |
| 2 | **XTPAXSR24VDC** |
| 2 | **XTPAXSR48VDC** |
| 2 | **XTPAXSR60VDC** |
| 2 | **XTPAXSR110VDC** |
| 2 | **XTPAXSR125VDC** |
| 2 | **XTPAXSR220VDC** |
| 2 | **XTPAXSR250VDC** |

Can be used to trip the manual motor protector from a remote location. Can be fitted on the left side of manual motor protectors. Cannot be combined with the XTPAXUVR. DC: Intermittent operation 5 sec.

### Undervoltage Release

**XTPAXUVR_**



**Contact Sequence**

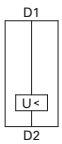


| Pkg. Qty. ① | Screw Terminal Catalog Number |
|---|---|
| 2 | **XTPAXUVR24V50H** |
| 2 | **XTPAXUVR24V60H** |
| 2 | **XTPAXUVR48V50H** |
| 2 | **XTPAXUVR60V50H** |
| 2 | **XTPAXUVR110V50H** |
| 2 | **XTPAXUVR120V60H** |
| 2 | **XTPAXUVR208V60H** |
| 2 | **XTPAXUVR220V50H** |
| 2 | **XTPAXUVR230V50H** |
| 2 | **XTPAXUVR240V50H** |
| 2 | **XTPAXUVR240V60H** |
| 2 | **XTPAXUVR380V50H** |
| 2 | **XTPAXUVR400V50H** |
| 2 | **XTPAXUVR415V50H** |
| 2 | **XTPAXUVR440V60H** |
| 2 | **XTPAXUVR480V60H** |
| 2 | **XTPAXUVR600V60H** |

Can be used to trip the manual motor protector from a remote location. Can be fitted on left side manual motor protectors. Cannot be combined with XTPAXSR. When combined with a circuit breaker, it can be used as emergency-stop device to IEC/EN 60204.

### Current Limiter ②

**XTPAXCL**



| Description | Contact Sequence | Pkg. Qty. ① | Catalog Number |
|---|---|---|---|
| To enhance the switching capacity of non-inherently safe 10–25A manual motor protectors to 150 kA/440V | 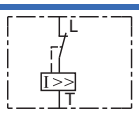 | 1 | **XTPAXCL** |

The XTPAXCL enhances the switching capacity of the XT manual motor protectors. It can be used with the XTPB, XTPR…BC1, XTPR…DC1 for individual or group protections. The rated uninterrupted current is 63A for IEC and 25A for UL/CSA. It can be mounted next to or behind the manual motor protector. See **Page V5-T1-181** for ratings when using the current limiter.

***Notes***

① Orders must be placed in multiples of package quantity listed.

② Max. rated operation voltage $U_e$ = 690V, rated uninterrupted current $I_u$ = 63A. Can be used for individual and group protection. For group protection and in combination with the XTPR…D order additional XTPAXIT incoming terminal if required. Mounting next to or behind the manual motor protector. 16–63A XTPR…D: 100 kA/400V, 10 kA/690V.

## IP65 Rotary Handle Mechanism ①②③④

XTPAXRHM_



| Description | Enclosure Rating | Pkg. Qty. ⑤ | Catalog Number |
|---|---|---|---|
| **Complete Kits—Includes Handle, Shaft and Required Hardware** | | | |
| Rotary handle mechanism—black ⑥ | IP65 NEMA 12 UL/CSA 4X | 1 | **XTPAXRHMB** |
| Rotary handle mechanism—red/yellow ⑦ | | 1 | **XTPAXRHMRY** |
| Rotary handle mechanism—black—rotated 90° from vertical ⑥ | | 1 | **XTPAXRHM90B** |
| Rotary handle mechanism—red/yellow—rotated 90° from vertical ⑦ | | 1 | **XTPAXRHM90RY** |

XTPAXRHMSFT



| | | | |
|---|---|---|---|
| **Separate Parts** | | | |
| Shaft only—includes shaft to mount to XTPR, 175 mm length | — | 10 | **XTPAXRHMSFT** |

XTPAXSW



## Sealing Facility

| Description | Pkg. Qty. ⑤ | Catalog Number |
|---|---|---|
| To prevent tampering with the overload release and the test function. It can be sealed using industry standard sealing wire. For use with XTPR manual motor protectors. | 5 | **XTPAXSW** |

## Three-Phase Commoning Links ⑧

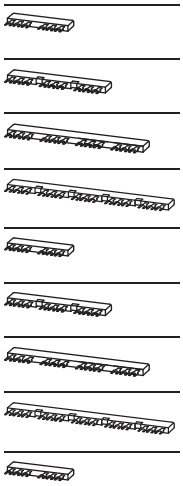

| For Use with… | Qty. MMP | MMP Frame Size | Pkg. Qty. ⑤ | Catalog Number |
|---|---|---|---|---|
| MMP with no side-mounted auxiliaries or voltage releases | 2 | B | 10 | **XTPAXCLKA2** |
| | | D | 1 | **XTPAXCLKA2D** |
| | 3 | B | 10 | **XTPAXCLKA3** |
| | | D | 1 | **XTPAXCLKA3D** |
| | 4 | B | 10 | **XTPAXCLKA4** |
| | | D | 1 | **XTPAXCLKA4D** |
| | 5 | B | 10 | **XTPAXCLKA5** |
| Each MMP with one auxiliary contact or trip-indicating auxiliary contact fitted on the right | 2 | B | 10 | **XTPAXCLKB2** |
| | | D | 1 | **XTPAXCLKB2D** |
| | 3 | B | 10 | **XTPAXCLKB3** |
| | | D | 1 | **XTPAXCLKB3D** |
| | 4 | B | 10 | **XTPAXCLKB4** |
| | | D | 1 | **XTPAXCLKB4D** |
| | 5 | B | 10 | **XTPAXCLKB5** |
| Each MMP with an auxiliary contact and trip-indicating auxiliary contact mounted on the right or a voltage release mounted on the left. | 2 | B | 10 | **XTPAXCLKC2** |
| | 4 | D | 1 | **XTPAXCLKC4D** |

For parallel power feed to several manual motor protectors on terminals 1, 3 and 5.

***Notes***

① Plug-in connection shafts, XTPAXRHMSFT_ can be cut to desired length for mounting depths of 100–240 mm. Carrier with extension shaft included.

② With ON/OFF switch position and "+" (tripped), lockable with 3 padlocks, 4–8 mm hasp. Can be locked in the OFF position, if required.

③ Rotary handle mechanisms ship with door interlock disabled. See instruction publication with product for how to enable door interlock.

④ Not for use with XTPAXFAEM20 early-make front-mount auxiliary contact.

⑤ Orders must be placed in multiples of package quantity listed.

⑥ For use on main switches to IEC/EN 60204.

⑦ For use on main switches with emergency-stop function to IEC/EN 60204.

⑧ Protected against accidental contact. Frame B short-circuit proof $U_e$ = 690V, $I_u$ = 63A. Frame B links can be combined by rotating mounting.

## Shroud for Unused Terminals of Three-Phase Commoning Links

**XTPAXUTS**



| For Use with… | Description | Pkg. Qty. ① | Catalog Number |
|---|---|---|---|
| Frame B XTPR | To cover unused terminals on three-phase commoning link. Protected against direct contact. | 20 | **XTPAXUTS** |

## Incoming Terminals for Three-Phase Commoning Link ②

**XTPAXIT**



| For Use with… | Pkg. Qty. ① | Catalog Number |
|---|---|---|
| Frame B XTPR, XTPB | 5 | **XTPAXIT** |

## Line-Side Adapter ③

**XTPAXLSA**



| For Use with… | Pkg. Qty. ① | Catalog Number |
|---|---|---|
| Frame B XTPR to create a UL 508 Type E/F manual combination starter | 5 | **XTPAXLSA** |

**XTPAXLSAD**



| | | |
|---|---|---|
| Frame D XTPR to create a UL 508 Type E/F manual combination starter | 1 | **XTPAXLSAD** ④ |

### *Combination Connection Kits*

## Non-Reversing Starters

**XTPAXTPCB**

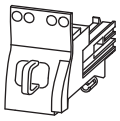

| For Use with… | Description/Comprised of … | Std. Pack ① | Catalog Number |
|---|---|---|---|
| XTPR…B + XTCE…B | Mechanical connection element for XTPR…B and contactor | 1 | **XTPAXTPCB** |
| | Main current wiring between XTPR…B and contactor in toolless plug connection | 1 | |
| | Use contactor auxiliary switch XTCEXFAT_. Control cable guidance: max. six cables up to 2.5 mm$^2$ external diameter or four cables up to 3.5 mm$^2$ external diameter. | | |

**XTPAXEMCB**

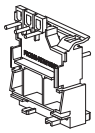

| | | | |
|---|---|---|---|
| XTPR…B + XTCE…B | Mechanical connection element for XTPR…B and contactor | 1 | **XTPAXEMCB** |
| | Main current wiring between XTPR…B and contactor screw in type connection | 1 | |

**XTPAXTPC_**

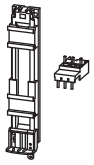

| | | | |
|---|---|---|---|
| XTPR…B + XTCE…C | DIN rail adapter plate<br>Main current wiring between XTPR and contactor | 1 | **XTPAXTPCC** |
| XTPR…D + XTCE…D | DIN rail adapter plate<br>Main current wiring between XTPR and contactor | 1 | **XTPAXTPCD** |

***Notes***

① Orders must be placed in multiples of package quantity listed.

② For three-phase commoning link, protected against accidental contact, $U_e$ = 690V, $I_u$ = 63A;
For conductor cross-sections: 2.5–25 mm$^2$ stranded; 2.5–16 mm$^2$ flexible with ferrules, AWG 14-6.

③ XTPAXLSA is for three-phase commoning link, finger and back-of-hand proof,
$U_e$ = 690V, $I_u$ = 60A for conductor cross sections: 2.5–25 mm$^2$ stranded,
2.5–16 mm$^2$ flexible with ferrule, AWG 14-6.

④ XTPAXLSAD cannot be combined with three-phase commoning links. Conductor size 8 AWG–1/0.

## Reversing Starters

| For Use with… | Description/Comprised of … | Std. Pack ① | Catalog Number |
|---|---|---|---|
| **XTPAXTPCRB** 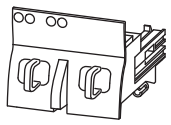 | | | |
| XTPR…B + XTCE…B01_ | Mechanical connection element for XTPR…B and contactor | 1 | **XTPAXTPCRB** |
| | Reversing starter main current wiring in toolless plug connection | 1 | |
| | Control cables for electrical interlocking in toolless plug connection:<br>– K1M: A1–K2M: 21<br>– K1M: 21–K2M: A1<br>– K1M: A2–K2M: A2 | 1 | |
| | Cable guidance | 1 | |
| | Use contactor auxiliary switch XTCEXFAT_. Control cable guidance: max. six cables up to 2.5 $mm^2$ external diameter or four cables up to 3.5 $mm^2$ external diameter. | | |
| **XTPAXTPCRC** 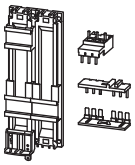 | | | |
| XTPR…B + XTCE…C | DIN rail adapter plate | 1 | **XTPAXTPCRC** |
| | Reversing starter main current wiring | 1 | |

***Note***

① Orders must be placed in multiples of package quantity listed.

## Electrical Connection Module

**XTPAXECM_**

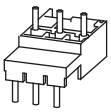

| For Use with… | Description/Comprised of … | Std. Pack ① | Catalog Number |
|---|---|---|---|
| XTPR…B + XTCE…C | Main current wiring between XTPR…B and contactor | 5 | **XTPAXECMC** |
| XTPR…D + XTCE…D | Main current wiring between XTPR…D and contactor | 5 | **XTPAXECMD** |

## DIN Rail Adapter Plates

| For Use with… | Description/Comprised of … | Std. Pack ① | Catalog Number |
|---|---|---|---|
| **XTPAXTPCPB**<br>  <br>XTPAXTPCB<br>XTPAXTPCRB | 45 mm wide adapter plate with one DIN rail<br>Connection element for side-by-side positioning of further plates | 4 | **XTPAXTPCPB** |
| **XTPAXTPCPD**<br>  <br>XTPAXECMD<br>XTPR…D + XTCE…C<br>XTPR…D + XTCE…D | 55 mm wide adapter plate with two DIN rails<br>Connection cams for further plates<br>For use with reversing and star-delta starters | 4 | **XTPAXTPCPD** |

***Note***

① Orders must be placed in multiples of package quantity listed.

***Pushbutton MMP Enclosures***

## Insulated Enclosures for Surface Mounting of XTPB Pushbutton Motor-Protective Circuit Breakers—Global Usage ①

| | Degree of Protection | For Use with… | Description | Catalog Number |
|---|---|---|---|---|
|  | IP40<br>NEMA 1 | XTPB MMP only or with:<br>XTPAXFA_, XTPBXFAEM20,<br>XTPAXSA_, XTPAXUVR_,<br>XTPAXSR_ | — | **XTPBXENCS40** |
| 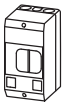 | IP65<br>NEMA<br>3R, 4X, 12, 13 | | With actuation membrane. | **XTPBXENCS65** |
|  | IP65<br>NEMA<br>3R, 4X, 12, 13 | XTPB MMP only or with:<br>XTPAXFA_, XTPAXUVR_,<br>XTPAXSR_, XTPAXCL | Lockable in OFF position. | **XTPBXENCSLO65** |
| | IP65<br>NEMA<br>3R, 4X, 12, 13 | XTPB MMP only or with:<br>XTPAXFA_, XTPBXFAEM20,<br>XTPAXUVR_, XTPAXSR_,<br>XTPAXCL | Lockable in OFF position in combination with XTPBXFAEM20 early-make front-mount auxiliary contact | **XTPBXENCSLE65** |
|  | IP65<br>NEMA<br>3R, 4X, 12, 13 | | With emergency-stop (e-stop) pushbutton actuator, red-yellow | **XTPBXENCSES65** |
| | IP65<br>NEMA<br>3R, 4X, 12, 13 | | With emergency-stop (e-stop) pushbutton actuator, red-yellow key release | **XTPBXENCSEK65** |

## Insulated Enclosures for Surface Mounting of XTPB Pushbutton Manual Motor Protectors—North American Usage ②③

| | Degree of Protection | For Use with… | Description | Catalog Number |
|---|---|---|---|---|
|  | IP41<br>NEMA 1 | XTPB MMP only or with:<br>XTPAXFA_, XTPBXFAEM20,<br>XTPAXSA_, XTPAXUVR_,<br>XTPAXSR_ | — | **XTPBXENAS41** |
| 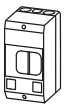 | IP65<br>NEMA<br>3R, 4X, 12, 13 | | With actuating diaphragm | **XTPBXENAS65** |
|  | IP65<br>NEMA<br>3R, 4X, 12, 13 | XTPB MMP only or with:<br>XTPAXFA_, XTPAXUVR_,<br>XTPAXSR_, XTPAXCL | Lockable in OFF position | **XTPBXENASLO65** |
| | IP65<br>NEMA<br>3R, 4X, 12, 13 | XTPB MMP only or with:<br>XTPAXFA_, XTPBXFAEM20,<br>XTPAXUVR_, XTPAXSR_,<br>XTPAXCL | Lockable in OFF position in combination with XTPBXFAEM20 early-make front-mount auxiliary contact | **XTPBXENASLE65** |
|  | IP65<br>NEMA<br>3R, 4X, 12, 13 | | With emergency-stop (e-stop) pushbutton actuator, red-yellow | **XTPBXENASES65** |
| | IP65<br>NEMA<br>3R, 4X, 12, 13 | | With emergency-stop (e-stop) pushbutton actuator, red-yellow key release | **XTPBXENASEK65** |

***Notes***

① Integrated terminal for PE(N) connection, two M25 cable entry knockouts at top and at bottom.

② Built-in terminal for PE(N).

③ North American enclosures come with conduit adapters for use with 1/2 in NPT.

## Insulated Enclosures for Surface Mounting of XTPB Pushbutton Manual Motor Protectors—North American Usage ①

| | Degree of Protection | For Use with… | Description | Catalog Number |
|---|---|---|---|---|
|  | Front IP40<br>NEMA 1 | XTPB MMP only or with:<br>XTPAXFA_, XTPBXFAEM20, XTPAXSA_, XTPAXUVR_, XTPAXSR_ | — | **XTPBXENCF40** |
|  | Front IP65<br>NEMA<br>3R, 4X, 12, 13 | | With actuating diaphragm | **XTPBXENCF55** |
|  | Front IP65<br>NEMA<br>3R, 4X, 12, 13 | XTPB MMP only or with:<br>XTPAXFA_, XTPAXUVR_, XTPAXSR_, XTPAXCL | Lockable in OFF position | **XTPBXENCFLO55** |
| | Front IP65<br>NEMA<br>3R, 4X, 12, 13 | XTPB MMP only or with:<br>XTPAXFA_, XTPBXFAEM20, XTPAXUVR_, XTPAXSR_, XTPAXCL | Lockable in OFF position in combination with XTPBXFAEM20 early-make front-mount auxiliary contact | **XTPBXENCFLE55** |
| 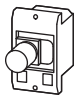 | Front IP65<br>NEMA<br>3R, 4X, 12, 13 | | With emergency-stop (e-stop) pushbutton actuator, red-yellow | **XTPBXENCFES55** |
| | Front IP65<br>NEMA<br>3R, 4X, 12, 13 | | With emergency-stop (e-stop) pushbutton actuator, red-yellow key release | **XTPBXENCFEK55** |

***Note***

① Integrated terminal for PE(N) connection.

***Rotary MMP Enclosures***

## Insulated Enclosures for Surface Mounting of Frame B (0.1–32A) XTPR Motor-Protective Circuit Breakers—Global Usage

| | Degree of Protection | For Use with… | Description | Catalog Number |
|---|---|---|---|---|
|  | IP41 with vertical mounting | Frame B XTPR only or with: XTPAXFA_, XTPAXSA_, XTPAXSATR_, XTPAXUVR_, XTPAXSR_, XTPAXCL | Cover with aperture dimensioned to accommodate front of MMP. IP40, when mounted turned through 90° to left/right | **XTPAXENCS41** ① |
|  | IP65 | | With black/grey rotary handle | **XTPAXENCS65B** ① |
| | IP65 | | With red/yellow rotary handle for use as emergency-stop switches to IEC/EN 60204 | **XTPAXENCS65RY** ① |
| 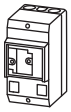 | IP40 | Frame B XTPR only or with: XTPAXSA_, XTPAXUVR_, XTPAXSR_, XTPAXCL | Cover with aperture dimensioned to accommodate front of MMP | **XTPAXENCS40** ② |
| 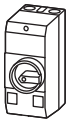 | IP55 | Frame B XTPR only or with: XTPAXFA_, XTPAXSA_, XTPAXUVR_, XTPAXSR_, XTPAXCL | With black/gray rotary handle | **XTPAXENCS55B** ② |
| | IP55 | | With red/yellow rotary handle for use as emergency-stop switches to IEC/EN 60204 | **XTPAXENCS55RY** ② |

## Insulated Enclosures for Surface Mounting of Frame B (0.1–32A) XTPR Rotary Manual Motor Protectors—North American Usage ③

| | Degree of Protection | For Use with… | Description | Catalog Number |
|---|---|---|---|---|
|  | IP55<br>NEMA 1, 12, 3R | Frame B XTPR only or with: XTPAXSA_ and XTPAXFA_, XTPAXUVR_ and XTPAXFA_, XTPAXSR_ and XTPAXFA_, XTPAXCL | With black/gray rotary handle | **XTPAXENAS55B** |
| | | | With red/yellow rotary handle for use as emergency-stop switch to VDE 0113 | **XTPAXENAS55RY** |

## Insulated Enclosures for Surface Mounting of Frame B XTPR (0.1–32A) Rotary Motor-Protective Circuit Breakers with XTPAXFAEM20 Early-Make Front-Mount Auxiliary Contact—Global Usage

| | Degree of Protection | For Use with… | Description | Catalog Number |
|---|---|---|---|---|
|  | IP65 | Frame B XTPR and XTPAXFAEM20 only or with: XTPAXFA_, XTPAXSA_, XTPAXSATR_, XTPAXUVR_, XTPAXSR_, XTPAXCL | With black/gray rotary handle | **XTPAXENCSEM65B** |
| | IP65 | | With red/yellow rotary handle for use as emergency-stop switches to IEC/EN 60204 | **XTPAXENCSEM65RY** |
| 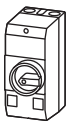 | IP55 | Frame B XTPR and XTPAXFAEM20 only or with: XTPAXFA_, XTPAXUVR_, XTPAXSR_, XTPAXCL | With black/gray rotary handle | **XTPAXENCSEM55B** |
| | IP55 | | With red/yellow rotary handle for use as emergency-stop switches to IEC/EN 60204 | **XTPAXENCSEM55RY** |

***Notes***

① M25 metric cable entry knock-out, top and bottom. Cable push-through membrane, top and bottom, in the back plate and as a control line entry. Includes N and PE terminals.

② Integrated terminal for PE(N) connection, two M25 cable entry knockouts at the top and bottom.

③ Built-in N and PE terminal, lower part without knockouts.



## Insulated Enclosures for Surface Mounting of Frame B XTPR (0.1–32A) Rotary Manual Motor Protectors with XTPAXFAEM20 Early-Make Front-Mount Auxiliary Contact—North American Usage ①

| Degree of Protection | For Use with… | Description | Catalog Number |
|---|---|---|---|
| IP55<br>NEMA 1, 12, 3R | Frame B XTPR only or with:<br>XTPAXSA_, XTPAXUVR_,<br>XTPAXCL | With black/grey rotary handle | **XTPAXENASEM55B** |
| | | With red/yellow rotary handle for use as emergency-stop switch to VDE 0113 | **XTPAXENASEM55RY** |

## Insulated Enclosures for Flush Mounting of Frame B (0.1–32A) XTPR Rotary Manual Motor Protectors—Global Usage ②

| Degree of Protection | For Use with… | Description | Catalog Number |
|---|---|---|---|
| Front IP40 | Frame B XTPR only or with:<br>XTPAXSA_, XTPAXUVR_,<br>XTPAXSR_, XTPAXCL | Cover with aperture dimensioned to accommodate front of MMP | **XTPAXENCF40** |
| Front IP55 | Frame B XTPR only or with:<br>XTPAXSA_, XTPAXUVR_,<br>XTPAXSR_, XTPAXFA_,<br>XTPAXCL | With black/gray rotary handle | **XTPAXENCF55B** |
| | | With red/yellow rotary handle for use as emergency-stop switches to IEC/EN 60204 | **XTPAXENCF55RY** |







## Insulated Enclosures for Surface Mounting of Frame D (10–65A) Rotary Motor-Protective Circuit Breakers

| Degree of Protection | For Use with… | Description | Catalog Number |
|---|---|---|---|
| IP65<br>NEMA 1, 12,<br>3R, 4X | Frame D XTPR only or with:<br>XTPAXFA_, XTPAXFAEM20,<br>XTPAXSA_, XTPAXSATR_,<br>XTPAXUVR_, XTPAXSR_,<br>XTPAXCL | With black/gray rotary handle | **XTPAXENCSD65B** |
| IP65<br>NEMA 1, 12,<br>3R, 4X | | With red/yellow rotary handle for use as emergency-stop switches to IEC/EN 60204 | **XTPAXENCSD65RY** |

***Notes***

① Built-in N and PE terminal, lower part without knockouts.

② Integrated terminal for PE(N) connection.

## *MMP Enclosure Accessories*

**XTPAXPL_**



### XTPR Manual Motor Protector Enclosure Padlock Attachment

| For Use with… | Description | Pkg. Qty. ① | Catalog Number |
|---|---|---|---|
| XTPAXENCS65B, XTPAXENCS65RY, XTPAXENCSEM65B, XTPAXENCSEM65RY, XTPAXENCS55B, XTPAXENCS55RY, XTPAXENCSEM55B, XTPAXENCSEM55RY | Padlocking feature. Up to three padlocks with 3–6 mm hasp thickness. For use as main switch to IEC/EN 60204 | 3 | **XTPAXPL1** ② |
| XTPAXENCSD65B, XTPAXENCSD65RY | | 1 | **XTPAXPL2** ② |
| XTPAXENCF55B, XTPAXENCF55RY | | 3 | **XTPAXPL3** ③ |

**XTPAXNT**



### Neutral Terminal for Use with XTPB and Frame B XTPR Flush-Mount Enclosures

| For Use with… | Description | Pkg. Qty. ① | Catalog Number |
|---|---|---|---|
| XTPBXENCF40, XTPBXENCF55, XTPAXENCF40, XTPAXENCF55B, XTPAXENCF55RY | For connection of a fifth conductor | 20 | **XTPAXNT** |

**XTPAXIL_**

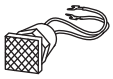

### Indicating Lights with Neon Bulb ④

| Color | Description—Indicating Light | Pkg. Qty. ① | Catalog Number |
|---|---|---|---|
| White | 110–230V | 10 | **XTPAXILWB** |
| | 230–400V | 10 | **XTPAXILWN** |
| | 415–500V | 10 | **XTPAXILWC** |
| Green | 110–230V | 10 | **XTPAXILGB** |
| | 230–400V | 10 | **XTPAXILGN** |
| | 415–500V | 10 | **XTPAXILGC** |
| Red | 110–230V | 10 | **XTPAXILRB** |
| | 230–400V | 10 | **XTPAXILRN** |

For use with XTPR and XTPB enclosures.

Lights do not carry individual IP or NEMA rating. All enclosure ratings remain valid when using indicating lights.

***Notes***

① Orders must be placed in multiples of package quantity listed.
② Lockable in the 0-position of the XTPR manual motor protector.
③ Lockable in the OFF position of the Frame B XTPR manual motor protector.
④ Product is not UL Listed/Registered.

1

## Technical Data and Specifications

### *XT* Manual Motor Protectors

| Description | XTPBP16B–<br>XTPB025B | XTPRP16B–<br>XTPR032B | XTPR016D–<br>XTPR063D |
|---|---|---|---|
| **General** | | | |
| Standards | IEC/EN 60947,<br>VDE 0660, UL 508,<br>CSA C22.2 No. 14 | IEC/EN 60947,<br>VDE 0660, UL 508,<br>CSA C22.2 No. 14 | IEC/EN 60947,<br>VDE 0660, UL 508,<br>CSA C22.2 No. 14 |
| Climatic proofing | ① | ① | ① |
| Ambient temperature, °C | | | |
| Storage | –25/80 | –25/80 | –25/70 |
| Open | –25/55 | –25/55 | –25/55 |
| Enclosed | –25/40 | –25/40 | –25/40 |
| Mounting position | 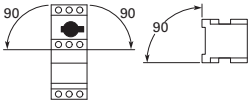 | 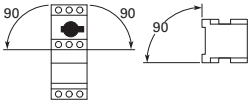 | 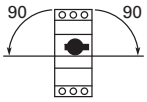 |
| Direction of incoming supply | As required | As required | As required |
| Degree of protection | | | |
| Device | IP20 | IP20 | IP20 |
| Terminals | IP00 | IP00 | IP00 |
| Protection against direct contact | Finger and<br>back-of-hand proof | Finger and<br>back-of-hand proof | Finger and<br>back-of-hand proof |
| Shock resistance half-sinusoidal shock<br>10 ms to IEC 60068-2-27 (g) | 25 | 25 | 15 |
| Altitude (m), maximum | 2000 | 2000 | 2000 |
| Terminal capacity | | | |
| Solid ($mm^2$) | 1 x (1–6)<br>2 x (1–6) | 1 x (1–6)<br>2 x (1–6) | 1 x (1–50)<br>2 x (1–35) |
| Flexible with ferrule to DIN 46228, ($mm^2$) | 1 x (1–6)<br>2 x (1–6) | 1 x (1–6)<br>2 x (1–6) | 1 x (1–35)<br>2 x (1–35) |
| Solid or stranded (AWG) | 18–10 | 18–10 | 14–2 |
| Terminal screw tightening torque | | | |
| Main cable, Nm | 1.7 | 1. | 3 |
| Main cable, lb-in | 15.0 | 15.0 | 26.6 |
| Control circuit cable, Nm | 1 | 1 | 1 |
| Control circuit cable, lb-in | 8.9 | 8.9 | 8.9 |
| **Main Contacts** | | | |
| Rated impulse withstand voltage ($U_{imp}$), Vac | 6000 | 6000 | 6000 |
| Overvoltage category/pollution degree | III/3 | III/3 | III/3 |
| Rated operational voltage ($U_e$), Vac | 690 | 690 | 690 |
| Rated uninterrupted current = rated operational current ($I_u = I_e$) in amperes | 25 or current setting of the overcurrent release | 25 or current setting of the overcurrent release | 25 or current setting of the overcurrent release |
| Rated frequency, Hz | 40–60 | 40–60 | 40–60 |
| Current heat loss (three-pole at operating temperature), W | 6 | 6 | 22 |
| Lifespan, mechanical (ops) | 50,000 | 100,000 | 30,000 |
| Lifespan, electrical (AC-3 at 400V) (ops) | 50,000 | 100,000 | 30,000 |
| Maximum operating frequency, operations/hr | 25 | 40 | 40 |
| Short-circuit rating | | | |
| AC | See **Page V5-T1-181** | See **Page V5-T1-181** | See **Page V5-T1-181** |
| DC (kA) | 60 | 60 (up to XTPR016B)<br>40 (XTPR020B–XTPR032B) | 60 |
| Motor switching capacity | | | |
| AC-3 (up to 690V) in amperes | 25 | 32 | 65 |
| DC-5 (up to 250V) in amperes | 25 | 25 (3 contacts in series) | 63 (3 contacts in series) |

***Note***

① Damp heat, constant, to IEC 60068-2-78; damp heat, cyclic, to IEC 60068-2-30.

## *XT* Manual Motor Protectors, continued

| Description | XTPBP16B–<br>XTPB025B | XTPRP16B–<br>XTPR032B | XTPR016D–<br>XTPR063D |
|---|---|---|---|
| **Releases** | | | |
| Overload release setting range (x $I_u$) | 0.6–1.0 | 0.6–1.0 | 0.6–1.0 |
| Fixed short-circuit release (x $I_u$) | 14 | 14 | 14 |
| Short-circuit release tolerance | ± 20% | ± 20% | ± 20% |
| Phase-failure sensitivity | IEC/EN 60947-1-1,<br>VDE 0660 Part 102 | IEC/EN 60947-1-1,<br>VDE 0660 Part 102 | IEC/EN 60947-1-1,<br>VDE 0660 Part 102 |
| Temperature compensation | | | |
| to IEC/EN 60947, VDE 0660, °C | –5/40 | –5/40 | –5/40 |
| operating range, °C | –25/55 | –25/55 | –25/55 |
| Temperature compensation residual error for T >20°C, %/K | ≤0.25 | ≤0.25 | ≤0.25 |

## Auxiliary Contacts

| Description | XTPAXSA_ _ | XTPAXFA_ _ | XTPA(B)XFAEM_ _ | XTPAXSATR_ _ |
|---|---|---|---|---|
| Rated impulse withstand voltage, $U_{imp}$ (Vac) | 6000 | 4000 | 4000 | 6000 |
| Overvoltage category/pollution degree | III/3 | III/3 | III/3 | III/3 |
| Rated operational voltage | | | | |
| $U_e$ (Vac) | 500 | 440 | 440 | 500 |
| $U_e$ (Vdc) | 250 | 250 | 250 | 250 |
| Safe isolation to VDE 0106 Part 101 and Part 101/A1 between auxiliary contacts and main contacts (Vac) | 690 | 690 | 690 | 690 |
| Rated operational current | | | | |
| AC-15 | | | | |
| 220–240 V, $I_e$ (A) | 3.5 | 1 | 1 | 3.5 |
| 380–415 V, $I_e$ (A) | 2 | — | — | 2 |
| 440–500 V, $I_e$ (A) | 1 | — | — | 1 |
| DC-13 L/R <100 ms | | | | |
| 24 V, $I_e$ (A) | 2 | 2 | 2 | 2 |
| 60 V, $I_e$ (A) | 1.5 | — | — | 1.5 |
| 110 V, $I_e$ (A) | 1 | — | — | 1 |
| 220 V, $I_e$ (A) | 0.25 | — | — | 0.25 |
| **Lifespan** | | | | |
| Mechanical, operations (x $10^6$) | 0.1 | 0.1 | 0.1 | 0.01 |
| Electrical, operations (x $10^6$) | 0.05 | 0.1 | 0.1 | 0.005 |
| Contact reliability (at $U_e$ = 24 Vdc, $U_{min}$–17V, $I_{min}$ = 5.4 mA, fault probability | $<10^{-8}$ <1 fault<br>at 1 x $10^8$ operations | $<10^{-8}$ <1 fault<br>at 1 x $10^8$ operations | $<10^{-8}$ <1 fault<br>at 1 x $10^8$ operations | $<10^{-8}$ <1 fault<br>at 1 x $10^8$ operations |
| Positively driven contacts to ZH 1/457 | Yes | — | — | — |
| **Short-Circuit Rating without Welding** | | | | |
| Fuseless | FAZ-B4/1-HI | — | — | FAZ-B4/1-HI |
| Fuse (A gG/gL) | 10 | 10 | 10 | 10 |
| **Terminal Capacity** | | | | |
| Solid or flexible conductor with ferrule ($mm^2$) | 0.75–2.5 | 0.75–1.5 | 0.75–1.5 | 0.75–2.5 |
| Solid or stranded (AWG) | 18–14 | 18–16 | 18–16 | 18–14 |

## Undervoltage Release

| Description | XTPAXUVR_ |
|---|---|
| **Cross-Section** | |
| Solid or flexible conductor with ferrule ($mm^2$) | 1 x (0.75–2.5)<br>2 x (0.75–2.5) |
| Solid or stranded (AWG) | 1 x (18–14)<br>2 x (18–14) |
| **Main Contact** | |
| Rated operational voltage, $U_e$ (Vac) | 42–480 |
| Rated operational voltage, $U_e$ (Vdc) | 24–250 |
| Pickup voltage, x $U_s$ | 0.85–1.1 |
| Dropout voltage, x $U_s$ | 0.7–0.35 |
| **Power Consumption** | |
| Pickup AC (VA) | 5 |
| Sealing AC (VA) | 3 |

## Current Limiter

| Description | XTPAXCL |
|---|---|
| Rated impulse withstand voltage ($U_{imp}$), Vac | 6000 |
| Overvoltage category/pollution degree | III/3 |
| Rated operational voltage, $U_e$ (Vac) | 690 |
| Rated interrupted current = Rated operational current ($I_u = I_e$) in amperes | 63 |

## XTPB, XTPR Single- and Two-Pole Circuits with DC and AC Current

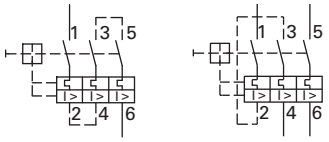


## Protection of PVC Insulated Cables Against Thermal Overload at Short-Circuit

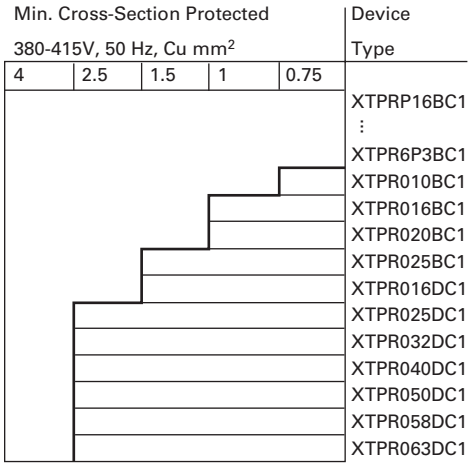


The chart above indicates which minimum cable cross-sections are protected by XTPR motor protective circuit breakers up to their rated conditional short-circuit current $I_q$.

## Shunt Release

| Description | XTPAXSR __ |
|---|---|
| **Cross-Section** | |
| Solid or flexible conductor with ferrule ($mm^2$) | 1 x (0.75–2.5)<br>2 x (0.75–2.5) |
| Solid or stranded (AWG) | 1 x (18–14)<br>2 x (18–14) |
| **Main Contact** | |
| Rated operational voltage, $U_e$ (Vac) | 42–480 |
| Rated operational voltage, $U_e$ (Vdc) | 24–250 |
| AC operating range, x $U_s$ | 0.7–1.1 |
| DC operating range, x $U_s$ (intermittent operation 5s) | 0.7–1.1 |
| **Power Consumption** | |
| Pickup AC (VA) | 5 |
| Sealing AC (VA) | 3 |
| Pickup DC (VA) | 3 |
| Sealing DC (VA) | 3 |

## Wiring Diagrams

### *Fuseless Installation with XTPR*

#### Backup Protection Diagram—XTPR...B

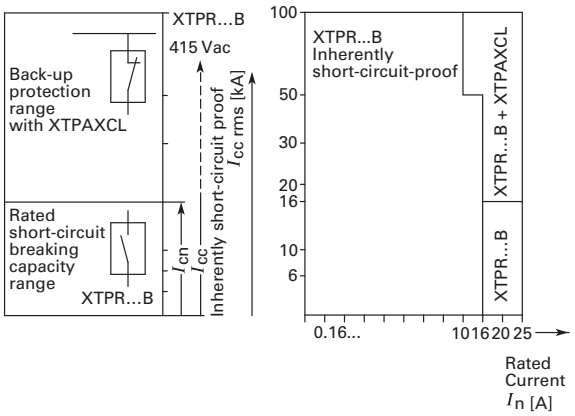


#### Backup Protection Diagram—XTPR...D

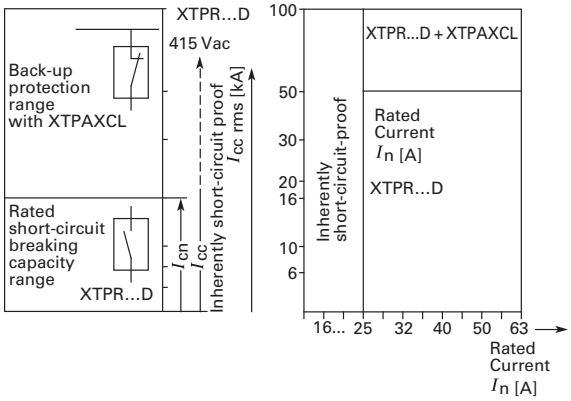


## Time/Current Curves

### *Characteristics*

The time/current characteristic, the current limiting characteristics and the $I^2t$ characteristics were determined in accordance with DIN VDE 0660 and IEC 60 947.

The tripping characteristic of the **inverse-time delayed overload releases** (thermal overload releases or "a" releases) for DC and AC with a frequency of 0 to 400 Hz also apply to the time/current characteristic.

The characteristics apply to the cold state. At operating temperature, the tripping times of the thermal releases are reduced to approximately 25%.

Under normal operating conditions, all three-poles of the device must be loaded. The three main conducting paths must be connected in series in order to protect single-phase or DC loads.

With three-pole loading, the maximum deviation in the tripping time for 3 times the setting current and upwards is ±20% and thus in accordance with DIN VDE 0165.

The tripping characteristics for the instantaneous, electromagnetic overcurrent releases (short-circuit releases or "n" releases) are based on the rated current $I_n$, which is also the maximum value of the setting range for circuit breakers with adjustable overload releases. If the current is set to a lower value, the tripping current of the "n" release is increased by a corresponding factor.

The characteristics of the electromagnetic overcurrent releases apply to frequencies of 50/60 Hz. Appropriate correction factors must be used for lower frequencies up to 16-2/3 Hz, for higher frequencies up to 400 Hz and for DC.

Time/current characteristics, current limiting characteristics and $I^2t$ characteristics are available on request.

### *MMP Tripping Characteristics*

#### XTPB, XTPR Frame B

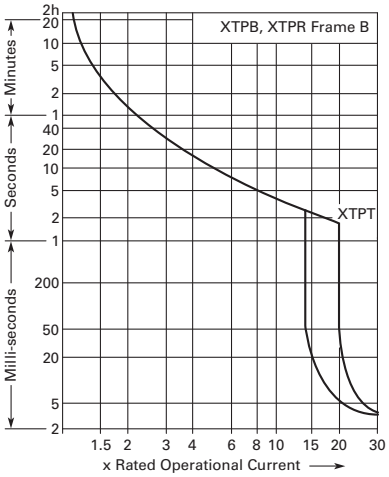


#### XTPR Frame D

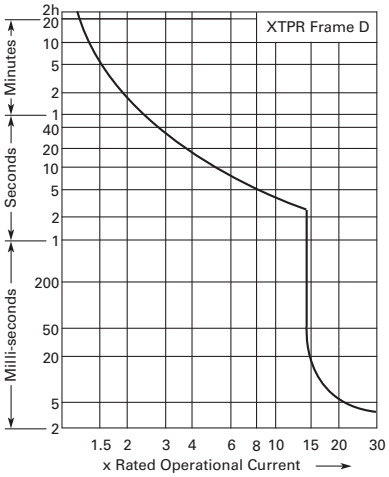

1

### *MMP Let-Through Tripping Characteristics*

#### XTPB, XTPR Frame B

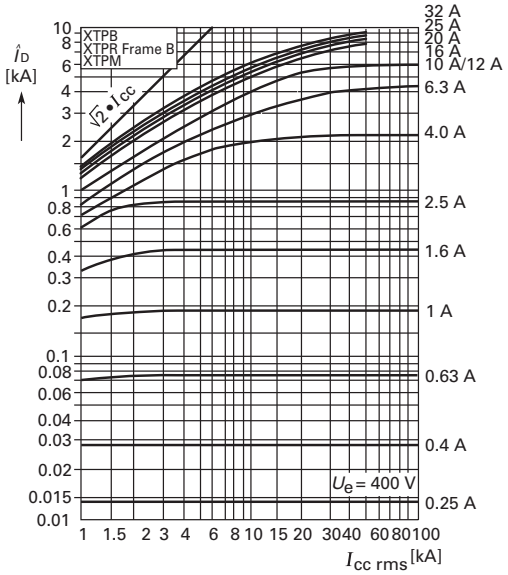


#### XTPR Frame D

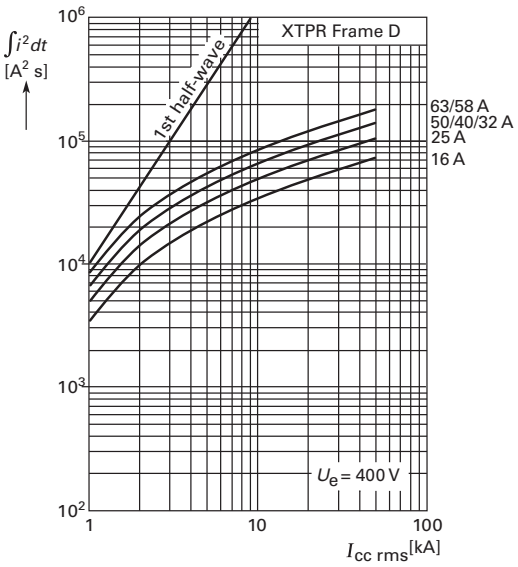


#### XTPR Frame D

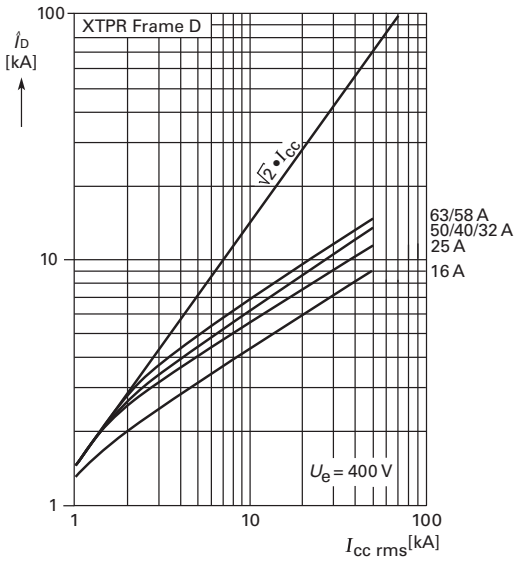

### *Manual Motor Protector Short-Circuit Ratings*

Rated uninterrupted current $I_u$ = Rated operational current $I_e$.
Rated conditional short-circuit current $I_q$—IEC/EN 60947-4-1.
Rated ultimate short-circuit breaking capacity $I_{cu}$— IEC/EN 60947-2.
Rated operational short-circuit breaking capacity $I_{cs}$— IEC/EN 60947-2.

## Global Use, IEC/EN 60947—XTPB with Classification Type "1" and Type "2"

| | 230V | | | | 400V | | | | 440V | | | | 500V | | | | 690V | | | |
|---|---|---|---|---|---|---|---|---|---|---|---|---|---|---|---|---|---|---|---|---|
| $I_u$ | $I_q$ | $I_{cu}$ | $I_{cs}$ | Fuse ①② | $I_q$ | $I_{cu}$ | $I_{cs}$ | Fuse ①② | $I_q$ | $I_{cu}$ | $I_{cs}$ | Fuse ①② | $I_q$ | $I_{cu}$ | $I_{cs}$ | Fuse ①② | $I_q$ | $I_{cu}$ | $I_{cs}$ | Fuse ①② |
| A | kA | kA | kA | A | kA | kA | kA | A | kA | kA | kA | A | kA | kA | kA | A | kA | kA | kA | A |
| 0.16–1 | 50 | 50 | 50 | 50 | 50 | 50 | 50 | 50 | 50 | 50 | 50 | 50 | — | — | — | — | — | — | — | — |
| 1.6 | 50 | 50 | 50 | 50 | 50 | 50 | 50 | 50 | 50 | 50 | 50 | 50 | — | — | — | — | — | — | — | — |
| 2.5 | 50 | 50 | 50 | 50 | 50 | 50 | 50 | 50 | 50 | 50 | 50 | 50 | — | — | — | — | — | — | — | — |
| 4 | 50 | 50 | 50 | 50 | 50 | 50 | 50 | 50 | 50 | 50 | 50 | 50 | — | — | — | — | — | — | — | — |
| 6.3 | 50 | 50 | 50 | 50 | 50 | 50 | 50 | 50 | 50 | 50 | 50 | 50 | — | — | — | — | — | — | — | — |
| 10 | 50 | 50 | 50 | 50 | 50 | 50 | 50 | 50 | 42 | 42 | 10 | 50 | — | — | — | — | — | — | — | — |
| 12 | 50 | 50 | 10 | 50 | 50 | 50 | 10 | 50 | 15 | 15 | 10 | 50 | — | — | — | — | — | — | — | — |
| 16 | 50 | 50 | 10 | 50 | 50 | 50 | 10 | 50 | 15 | 15 | 10 | 50 | — | — | — | — | — | — | — | — |
| 20 | 50 | 50 | 10 | 50 | 50 | 50 | 10 | 50 | 10 | 10 | 10 | 50 | — | — | — | — | — | — | — | — |
| 25 | 50 | 50 | 10 | 50 | 50 | 50 | 10 | 50 | 10 | 10 | 10 | 50 | — | — | — | — | — | — | — | — |

## Global Use, IEC/EN 60947—XTPR…BC1 with Classification Type "1" and Type "2"

| | 230V | | | | 400V | | | | 440V | | | | 500V | | | | 690V | | | |
|---|---|---|---|---|---|---|---|---|---|---|---|---|---|---|---|---|---|---|---|---|
| $I_u$ | $I_q$ | $I_{cu}$ | $I_{cs}$ | Fuse ①② | $I_q$ | $I_{cu}$ | $I_{cs}$ | Fuse ①② | $I_q$ | $I_{cu}$ | $I_{cs}$ | Fuse ①② | $I_q$ | $I_{cu}$ | $I_{cs}$ | Fuse ①② | $I_q$ | $I_{cu}$ | $I_{cs}$ | Fuse ①② |
| A | kA | kA | kA | A | kA | kA | kA | A | kA | kA | kA | A | kA | kA | kA | A | kA | kA | kA | A |
| 0.16–1 | 150 ③ | 150 ③ | 150 ③ | N | 150 ③ | 150 ③ | 150 ③ | N | ③ | ③ | ③ | N | ③ | ③ | ③ | N | ③ | ③ | ③ | N |
| 1.6 | 150 ③ | 150 ③ | 150 ③ | N | 150 ③ | 150 ③ | 150 ③ | N | ③ | ③ | ③ | N | ③ | ③ | ③ | N | ③ | ③ | ③ | N |
| 2.5 | 150 ③ | 150 ③ | 150 ③ | N | 150 ③ | 150 ③ | 150 ③ | N | ③ | ③ | ③ | N | ③ | ③ | ③ | N | 5 | 5 | 5 | 50 |
| 4 | 150 ③ | 150 ③ | 150 ③ | N | 150 ③ | 150 ③ | 150 ③ | N | ③ | ③ | ③ | N | ③ | ③ | ③ | N | 3 | 3 | 3 | 50 |
| 6.3 | 150 ③ | 150 ③ | 150 ③ | N | 150 ③ | 150 ③ | 150 ③ | N | ③ | ③ | ③ | N | 42 | 42 | 6 | 50 | 3 | 3 | 2 | 50 |
| 10 | 150 ③ | 150 ③ | 150 ③ | N | 150 ③ | 150 ③ | 150 ③ | N | 42 | 42 | 10 | 50 | 42 | 42 | 6 | 50 | 3 | 3 | 2 | 50 |
| 12 | 50 | 50 | 10 | 50 | 50 | 50 | 10 | 50 | 15 | 15 | 10 | 50 | 15 | 15 | 6 | 50 | 3 | 3 | 2 | 50 |
| 16 | 50 | 50 | 10 | 50 | 50 | 50 | 10 | 50 | 15 | 15 | 10 | 50 | 15 | 15 | 6 | 50 | 3 | 3 | 2 | 50 |
| 20 | 50 | 50 | 10 | 50 | 50 | 50 | 10 | 50 | 15 | 15 | 10 | 50 | 6 | 6 | 6 | 50 | 3 | 3 | 2 | 50 |
| 25 | 50 | 50 | 10 | 50 | 50 | 50 | 10 | 50 | 10 | 10 | 10 | 50 | 6 | 6 | 6 | 50 | 3 | 3 | 2 | 50 |
| 32 | 50 | 50 | 10 | 50 | 50 | 50 | 10 | 50 | 10 | 10 | 10 | 50 | 6 | 6 | 6 | 50 | 3 | 3 | 2 | 50 |

***Notes***

① N = Not required.

② XTPR…BC1, XTPT, XTPM—Required back-up fuse if the short-circuit current exceeds the rated conditional short-circuit current ($I_{cc} > I_q$); XTPB, XTPR…DC1—Fuse (A gG/gL) for enhancing the switching capacity of the motor protective circuit breaker to 100 kA.

③ No upstream protective device required, as it is the auto-protected range (100/150 kA—Frame B, 150 kA—Frame D).

## Global Use, IEC/EN 60947—XTPR…DC1 with Classification Type "1" and Type "2"

| | 230V | | | | 400V | | | | 440V | | | | 500V | | | | 690V | | | |
|---|---|---|---|---|---|---|---|---|---|---|---|---|---|---|---|---|---|---|---|---|
| $I_u$ | $I_q$ | $I_{cu}$ | $I_{cs}$ | Fuse ①② | $I_q$ | $I_{cu}$ | $I_{cs}$ | Fuse ①② | $I_q$ | $I_{cu}$ | $I_{cs}$ | Fuse ①② | $I_q$ | $I_{cu}$ | $I_{cs}$ | Fuse ①② | $I_q$ | $I_{cu}$ | $I_{cs}$ | Fuse ①② |
| A | kA | kA | kA | A | kA | kA | kA | A | kA | kA | kA | A | kA | kA | kA | A | kA | kA | kA | A |
| 16 | 150 ③ | 150 ③ | 25 | N | 150 ③ | 150 ③ | 25 | N | 45 | 45 | 25 | 100 | 15 | 15 | | 100 | 8 | 8 | 2.5 | 100 |
| 25 | 150 ③ | 150 ③ | 25 | N | 150 ③ | 150 ③ | 25 | N | 45 | 45 | 25 | 100 | 15 | 15 | | 100 | 8 | 8 | 2.5 | 100 |
| 32 | 50 | 50 | 25 | 100 | 50 | 50 | 25 | 100 | 45 | 45 | 25 | 100 | 15 | 15 | | 100 | 5 | 5 | 2.5 | 100 |
| 40 | 50 | 50 | 25 | 100 | 50 | 50 | 25 | 100 | 45 | 45 | 25 | 100 | 15 | 15 | | 100 | 5 | 5 | 2.5 | 100 |
| 50 | 50 | 50 | 25 | 100 | 50 | 50 | 25 | 100 | 45 | 45 | 25 | 100 | 15 | 15 | | 100 | 5 | 5 | 2.5 | 100 |
| 58 | 50 | 50 | 25 | 160 | 50 | 50 | 25 | 160 | 45 | 45 | 25 | 160 | 15 | 15 | | 160 | 5 | 5 | 2.5 | 160 |
| 63 | 50 | 50 | 25 | 160 | 50 | 50 | 25 | 160 | 45 | 45 | 25 | 160 | 15 | 15 | | 160 | 5 | 5 | 2.5 | 160 |

***Ratings for Group Motor Applications***

## UL 508/CSA C22.2 No. 14—XTPB—Frame B, Manual Motor Protector with Thermal and Magnetic Trip

| Catalog Number | Rated Uninterrupted Current—$I_u$ (Amps) | FLA Adjustment Range/Overload Release—$I_r$ (Amps) | Short Circuit Release—$I_{rm}$ (Amps) | Maximum Protective Device for UL/CSA Group Protection | | | | | |
|---|---|---|---|---|---|---|---|---|---|
| | | | | Maximum rms Sym Current—480V (kA) | w/Current Limiter—XTPAXCL | Maximum Fuse Rating (A) | w/Current Limiter—XTPAXCL | Circuit Breaker Maximum (A) | w/Current Limiter—XTPAXCL |
| **XTPBP16BC1** | 0.16 | 0.1–0.16 | 2.2 | 50 | — | 600 | — | 600 | — |
| **XTPBP25BC1** | 0.25 | 0.16–0.25 | 3.5 | 50 | — | 600 | — | 600 | — |
| **XTPBP40BC1** | 0.4 | 0.25–0.4 | 5.6 | 50 | — | 600 | — | 600 | — |
| **XTPBP63BC1** | 0.63 | 0.4–0.63 | 8.8 | 50 | — | 600 | — | 600 | — |
| **XTPB001BC1** | 1 | 0.63–1 | 14 | 50 | — | 600 | — | 600 | — |
| **XTPB1P6BC1** | 1.6 | 1–1.6 | 22 | 50 | — | 600 | — | 600 | — |
| **XTPB2P5BC1** | 2.5 | 1.6–2.5 | 35 | 50 | — | 600 | — | 600 | — |
| **XTPB004BC1** | 4 | 2.5–4 | 56 | 50 | — | 600 | — | 600 | — |
| **XTPB6P3BC1** | 6.3 | 4–6.3 | 88 | 50 | — | 600 | — | 600 | — |
| **XTPB010BC1** | 10 | 6.3–10 | 140 | 30 | 50 | 600 | 600 | 600 | 600 |
| **XTPB012BC1** | 12 | 8–12 | 168 | 10 | 50 | 150 | 600 | 125 ⑤ | 600 |
| **XTPB016BC1** | 16 | 10–16 | 224 | 10 | 50 | 150 | 600 | 125 ⑤ | 600 |
| **XTPB020BC1** ④ | 20 | 16–20 | 280 | 10 | 18 | 150 | 600 | 125 | 600 |
| **XTPB025BC1** ④ | 25 | 20–25 | 350 | 10 | 18 | 150 | 600 | 125 | 600 |

***Notes***

① N = Not required.

② XTPR…BC1, XTPT, XTPM—Required back-up fuse if the short-circuit current exceeds the rated conditional short-circuit current ($I_{cc} > I_q$); XTPB, XTPR…DC1—Fuse (A gG/gL) for enhancing the switching capacity of the motor protective circuit breaker to 100 kA.

③ No upstream protective device required, as it is the auto-protected range (100/150 kA—Frame B, 150 kA—Frame D).

④ IEC/EN 60947-4-1.

⑤ 22 kA 600 Vac.

## UL 508/CSA C22.2 No. 14—XTPR—Frame B (all Screw and Spring Cage Terminal Options), Manual Motor Protector with Thermal and Magnetic Trip

| Catalog Number | Rated Uninterrupted Current—$I_u$ (Amps) | FLA Adjustment Range/Overload Release—$I_r$ (Amps) | Short Circuit Release—$I_{rm}$ (Amps) | Maximum Protective Device for UL/CSA Group Protection | | | | | |
|---|---|---|---|---|---|---|---|---|---|
| | | | | Maximum rms Sym Current—480V (kA) | w/Current Limiter—XTPAXCL | Maximum Fuse Rating (A) | w/Current Limiter—XTPAXCL | Circuit Breaker Maximum (A) | w/Current Limiter—XTPAXCL |
| **XTPRP16BC1** | 0.16 | 0.1–0.16 | 2.2 | 50 | — | 600 | — | 600 | — |
| **XTPRP25BC1** | 0.25 | 0.16–0.25 | 3.5 | 50 | — | 600 | — | 600 | — |
| **XTPRP40BC1** | 0.4 | 0.25–0.4 | 5.6 | 50 | — | 600 | — | 600 | — |
| **XTPRP63BC1** | 0.63 | 0.4–0.63 | 8.8 | 50 | — | 600 | — | 600 | — |
| **XTPR001BC1** | 1 | 0.63–1 | 14 | 50 | — | 600 | — | 600 | — |
| **XTPR1P6BC1** | 1.6 | 1–1.6 | 22 | 50 | — | 600 | — | 600 | — |
| **XTPR2P5BC1** | 2.5 | 1.6–2.5 | 35 | 50 | — | 600 | — | 600 | — |
| **XTPR004BC1** | 4 | 2.5–4 | 56 | 50 | — | 600 | — | 600 | — |
| **XTPR6P3BC1** | 6.3 | 4–6.3 | 88 | 50 | — | 600 | — | 600 | — |
| **XTPR010BC1** | 10 | 6.3–10 | 140 | 30 | 50 | 600 | 600 | 600 | 600 |
| **XTPR012BC1** | 12 | 8–12 | 168 | 10 | 50 | 150 | 600 | 125 | 600 |
| **XTPR016BC1** | 16 | 10–16 | 224 | 10 | 50 | 150 | 600 | 125 ① | 600 |
| **XTPR032BC1** | 32 | 25–32 | 448 | 10 | 18 | 150 | 600 | 125 | 600 |
| **XTPR025BC1** | 25 | 20–25 | 350 | 10 | 18 | 150 | 600 | 125 | 600 |
| **XTPR032BC1** | 32 | 25–32 | 448 | 10 | 18 | 150 | 600 | 125 | 600 |

## UL 508/CSA C22.2 No. 14—XTPR—Frame D, Manual Motor Protector with Thermal and Magnetic Trip

| Catalog Number | Rated Uninterrupted Current—$I_u$ (Amps) | FLA Adjustment Range/Overload Release—$I_r$ (Amps) | Short Circuit Release—$I_{rm}$ (Amps) | Maximum Protective Device for UL/CSA Group Protection | | | | | |
|---|---|---|---|---|---|---|---|---|---|
| | | | | Maximum rms Sym Current—480V (kA) | w/Current Limiter—XTPAXCL | Maximum Fuse Rating (A) | w/Current Limiter—XTPAXCL | Circuit Breaker Maximum (A) | w/Current Limiter—XTPAXCL |
| **XTPR016DC1** | 16 | 10–16 | 224 | 65 | — | 600 | — | 600 | — |
| **XTPR025DC1** | 25 | 16–25 | 350 | 65 | — | 600 | — | 600 | — |
| **XTPR032DC1** | 32 | 25–32 | 448 | 65 | — | 600 | — | 600 | — |
| **XTPR040DC1** | 40 | 32–40 | 560 | 65 | — | 600 | — | 600 | — |
| **XTPR050DC1** | 50 | 40–50 | 700 | 65 | — | 600 | — | 600 | — |
| **XTPR058DC1** | 58 | 50–58 | 812 | 65 | — | 600 | — | 600 | — |
| **XTPR063DC1** | 65 | 55–63 | 882 | 65 | — | 600 | — | 600 | — |

***Note***

① 22 kA 600 Vac.

## UL 508 Type E Ratings—XTPR Frame B + XTPAXLSA

| Manual Motor Protector—Screw Terminal Catalog Number | Line Side Adapter Catalog Number | FLA Adjustment Range/Overload Release—$I_r$ (Amps) | Short Circuit Release—$I_{rm}$ (Amps) | UL 508 Type E Application Maximum rms Symmetrical Short-Circuit Ratings (kA) 480/277V | 600/347V | Maximum Upstream Protective Device (A) ① Maximum Fuse 600V | Maximum Circuit Breaker 600V |
|---|---|---|---|---|---|---|---|
| **XTPRP16BB1** | **XTPAXLSA** | 0.1–0.16 | 2.2 | 50 | 50 | Not required | Not required |
| **XTPRP25BC1** | **XTPAXLSA** | 0.16–0.25 | 3.5 | 50 | 50 | Not required | Not required |
| **XTPRP40BC1** | **XTPAXLSA** | 0.25–0.4 | 5.6 | 50 | 50 | Not required | Not required |
| **XTPRP63BC1** | **XTPAXLSA** | 0.4–0.63 | 8.82 | 50 | 50 | Not required | Not required |
| **XTPR001BC1** | **XTPAXLSA** | 0.63–1 | 14 | 50 | 50 | Not required | Not required |
| **XTPR1P6BC1** | **XTPAXLSA** | 1–1.6 | 22.4 | 50 | 50 | Not required | Not required |
| **XTPR2P5BC1** | **XTPAXLSA** | 1.6–2.5 | 35 | 50 | 50 | Not required | Not required |
| **XTPR004BC1** | **XTPAXLSA** | 2.5–4 | 56 | 50 | 50 | Not required | Not required |
| **XTPR6P3BC1** | **XTPAXLSA** | 4–6.3 | 88.2 | 65 | 50 | Not required | Not required |
| **XTPR010BC1** | **XTPAXLSA** | 6.3–10 | 140 | 65 | 50 | Not required | Not required |
| **XTPR012BC1** | **XTPAXLSA** | 8–12 | 168 | 65 | — | Not required | Not required |
| **XTPR016BC1** | **XTPAXLSA** | 10–16 | 224 | 42 | — | Not required | Not required |
| **XTPR020BC1** | **XTPAXLSA** | 16–20 | 280 | 18 | — | Not required | Not required |
| **XTPR025BC1** | **XTPAXLSA** | 20–25 | 350 | 18 | — | Not required | Not required |
| **XTPR032BC1** | **XTPAXLSA** | 25–32 | 448 | 18 | — | Not required | Not required |

## UL 508 Type E Ratings—XTPR Frame D + XTPAXLSAD

| Manual Motor Protector—Screw Terminal Catalog Number | Line Side Adapter Catalog Number | FLA Adjustment Range/Overload Release—$I_r$ (Amps) | Short Circuit Release—$I_{rm}$ (Amps) | UL 508 Type E Application Maximum rms Symmetrical Short-Circuit Ratings (kA) 240V | 480/277V | 600/347V | Maximum Upstream Protective Device (A) ① Maximum Fuse 600V | Maximum Circuit Breaker 600V |
|---|---|---|---|---|---|---|---|---|
| **XTPR016DC1** | **XTPAXLSAD** | 10–16 | 224 | 65 | 65 | 25 | Not required | Not required |
| **XTPR025DC1** | **XTPAXLSAD** | 16–25 | 350 | 65 | 65 | 25 | Not required | Not required |
| **XTPR032DC1** | **XTPAXLSAD** | 25–32 | 448 | 65 | 65 | 25 | Not required | Not required |
| **XTPR040DC1** | **XTPAXLSAD** | 32–40 | 560 | 65 | 65 | 25 | Not required | Not required |
| **XTPR050DC1** | **XTPAXLSAD** | 40–50 | 700 | 65 | 65 | — | Not required | Not required |
| **XTPR058DC1** | **XTPAXLSAD** | 50–58 | 812 | 65 | 65 | — | Not required | Not required |
| **XTPR063DC1** | **XTPAXLSAD** | 55–65 | 882 | 65 | 65 | — | Not required | Not required |

***Note***

① For UL 508 Type E applications, the manual motor protector assembly does not require a dedicated upstream protective device in the panel, thus a maximum rating is not required.

## Dimensions

Approximate Dimensions in mm [in]

### Manual Motor Protectors—XTPB

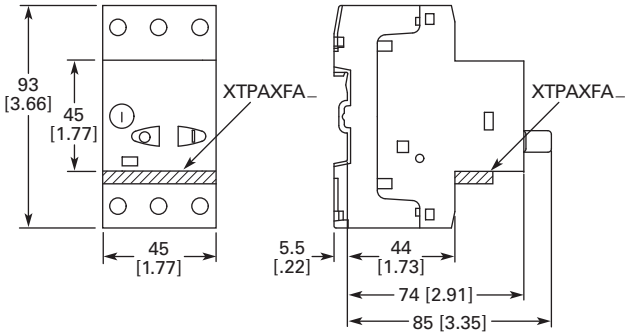


### Manual Motor Protectors, Manual Transformer Protectors—XTPR...B

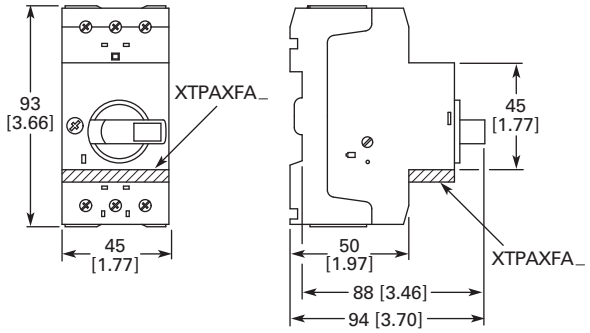


### Manual Motor Protector—XTPR...DC1

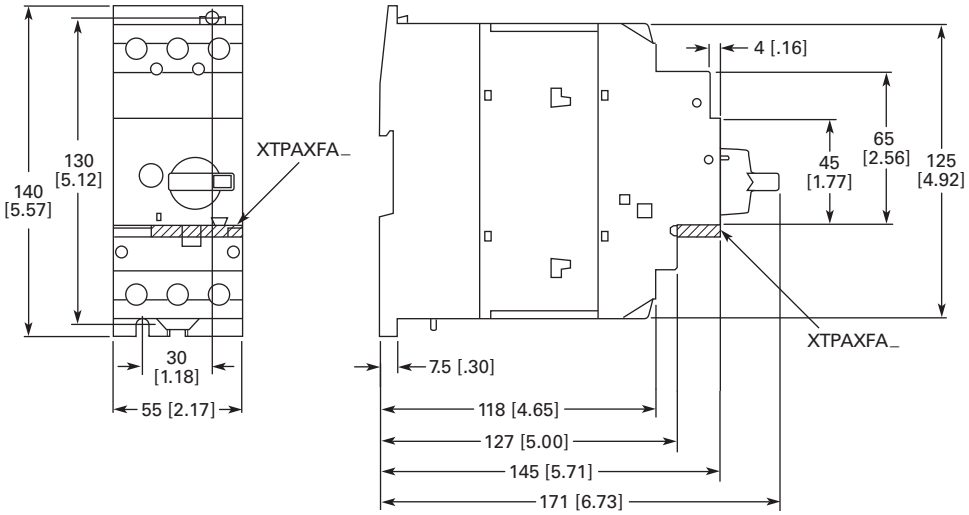


### Current Limiter—XTPAXCL

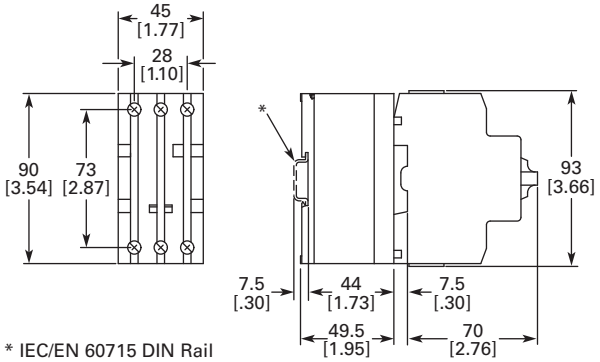


* IEC/EN 60715 DIN Rail

### MMPs with Early-Make Auxiliary Contacts—XTPR...BC1 + XTPAXFAEM20

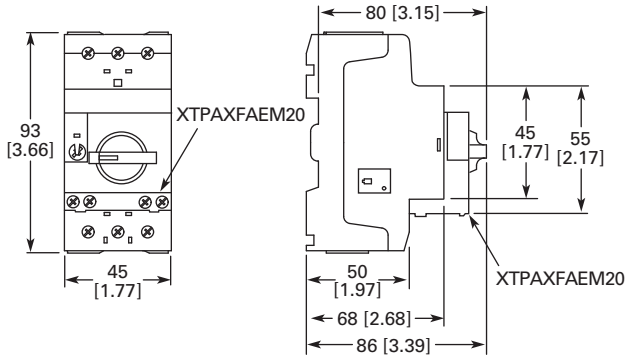

Approximate Dimensions in mm [in]

### Standard Auxiliary Contact—XTPAXSA_

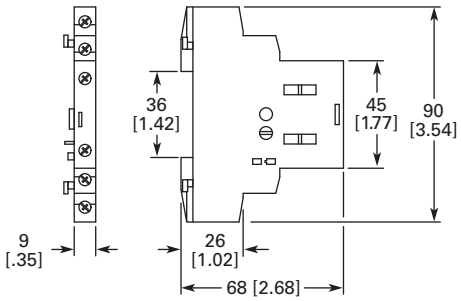


### Trip Indicating Auxiliary Contact—XTPAXSATR_

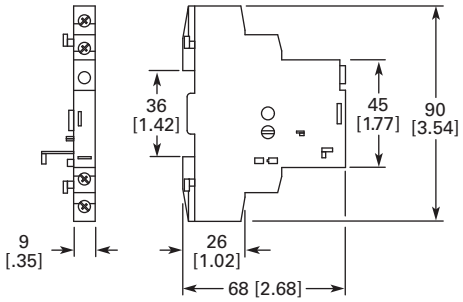


### Undervoltage/Shunt Release—XTPAXUVR_, XTPAXSR_

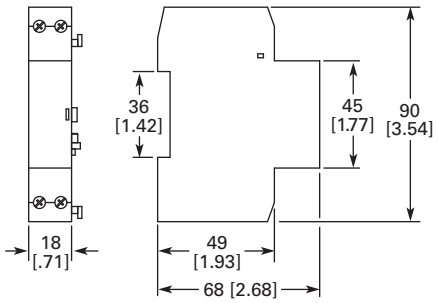


### Three-Phase Commoning Link—XTPAXCLKA4, XTPAXCLKA2

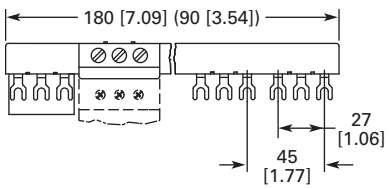


### Three-Phase Commoning Link—XTPAXCLKB5, XTPAXCLKB4, XTPAXCLKB3 and XTPAXCLKB2

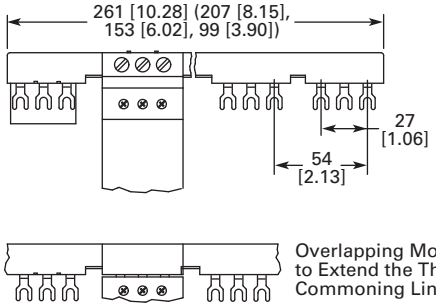


### Three-Phase Commoning Link—XTPAXCLKC4, XTPAXCLKC2

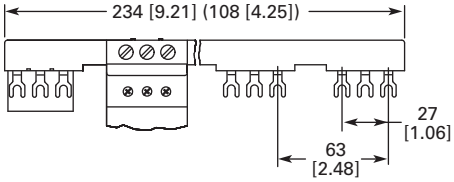


### Incoming Terminal, Line Side Adapter—XTPAXIT, XTPAXLSA

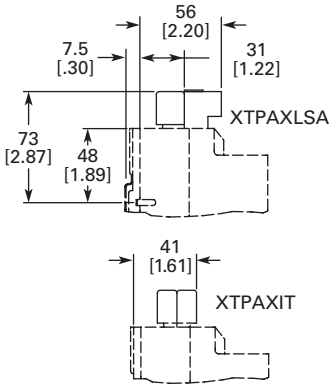

Approximate Dimensions in mm [in]

***Three-Phase Commoning Link***

### XTPAXCLKA4D, XTPAXCLKA3D and XTPAXCLKA2D

#### XTPAXCLKA4D

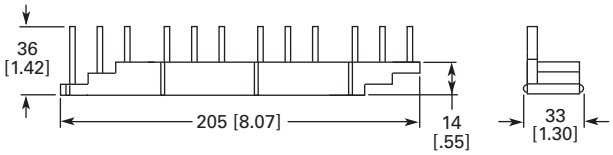


#### XTPAXCLKA3D

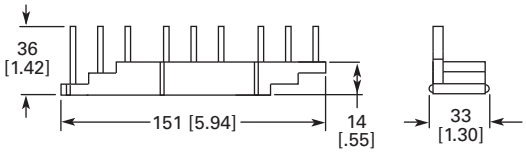


#### XTPAXCLKA2D

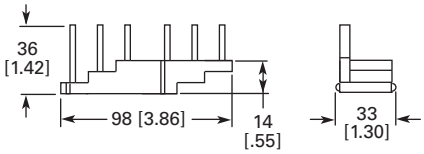


### XTPAXCLKB4D, XTPAXCLKB3D and XTPAXCLKB2D

#### XTPAXCLKB4D

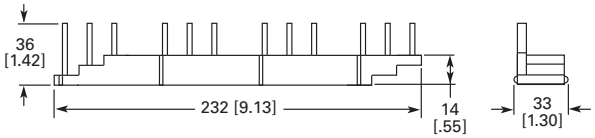


#### XTPAXCLKB3D

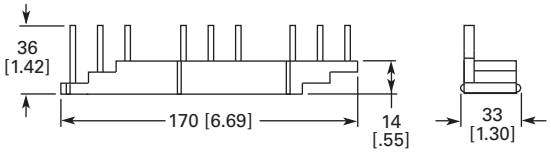


#### XTPAXCLKB2D

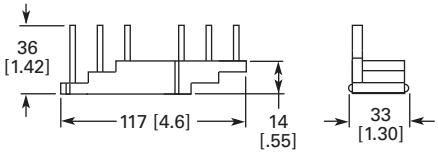


### XTPAXCLKC4D and XTPAXCLKC2D

#### XTPAXCLKC4D

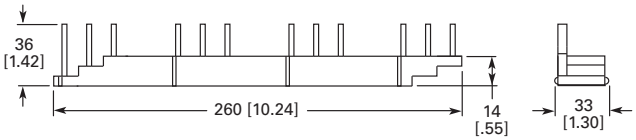


#### XTPAXCLKC2D

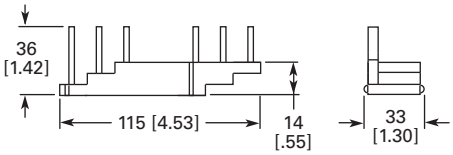

Approximate Dimensions in mm [in]

## Insulated Enclosures for Surface Mounting of XTPB Manual Motor Protectors

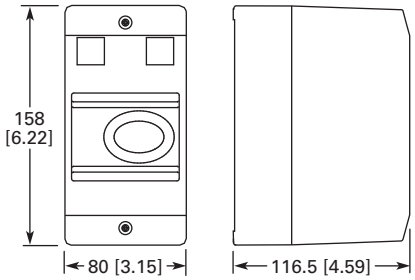


**XTPBXENCS40, XTPBXENCS65, XTPBXENAS41, XTPBXENAS65**

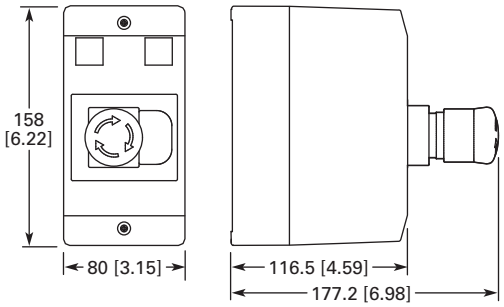


**XTPBXENCSEK65, XTPBXENCSES65, XTPBXENASEK65, XTPBXENASES65**

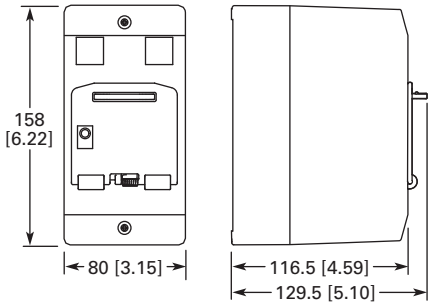


**XTPBXENCSLE65, XTPBXENCSLO65, XTPBXENASLE65, XTPBXENASO065**

## Insulated Enclosures for Flush Mounting of XTPB Manual Motor Protectors

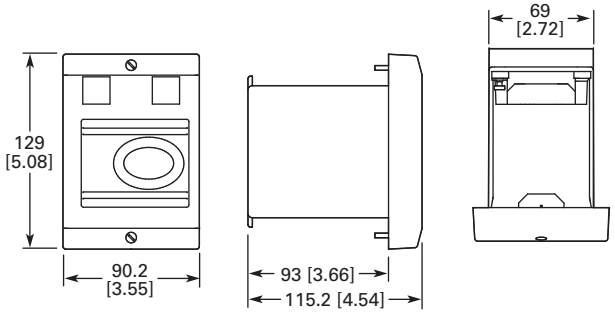


**XTPBXENCF40, XTPBXENCF55**

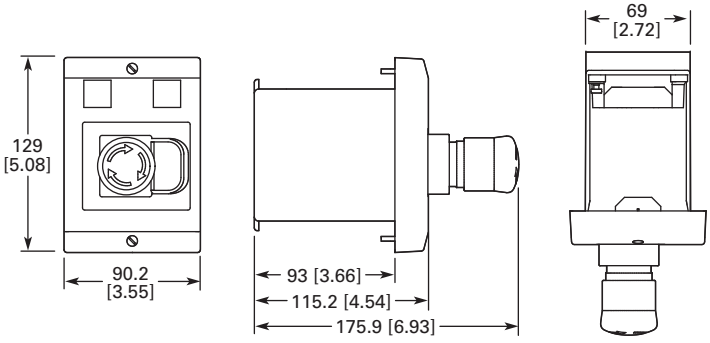


**XTPBXENCFEK55, XTPBXENCFES55**

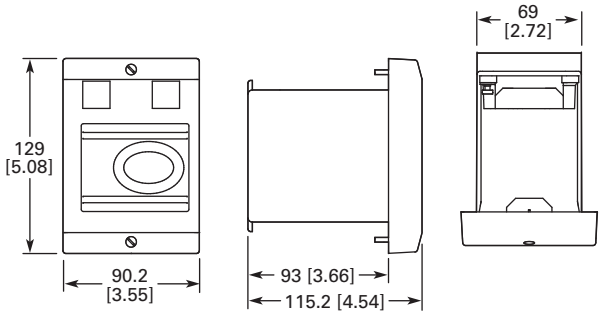


**XTPBXENCFLE55, XTPBXENCFLO55**

Approximate Dimensions in mm [in]

## Insulated Enclosures for Surface Mounting of XTPR…B Manual Motor Protectors

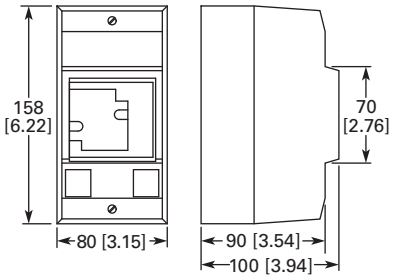


**XTPAXENCS40**

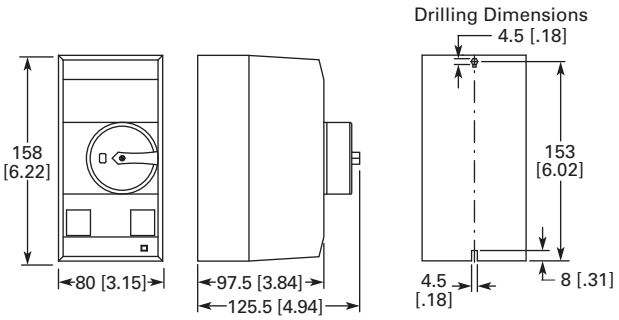


**XTPAXENCS55B, XTPAXENCS55RY, XTPAXENCSEM55B, XTPAXENCSEM55RY**

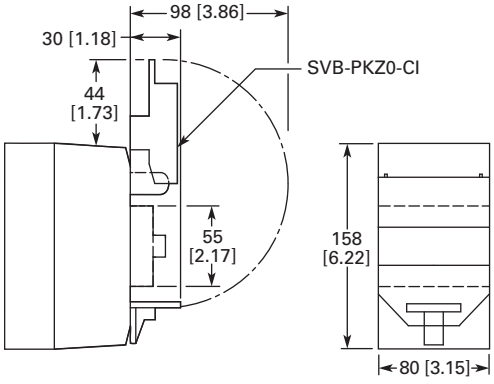


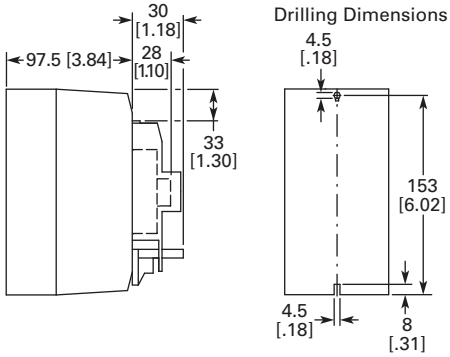





**XTPAXENCS55_ + XTPAXPL1, XTPAXENCSEM55_ + XTPAXPL1**

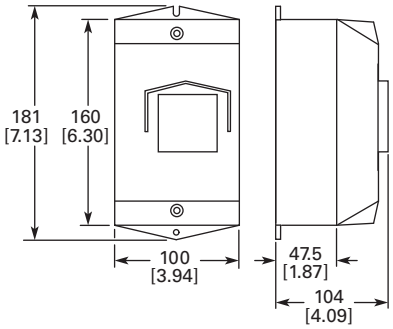


**XTPAXENCSH41, XTPAXENCS41, XTPAXENAS41**

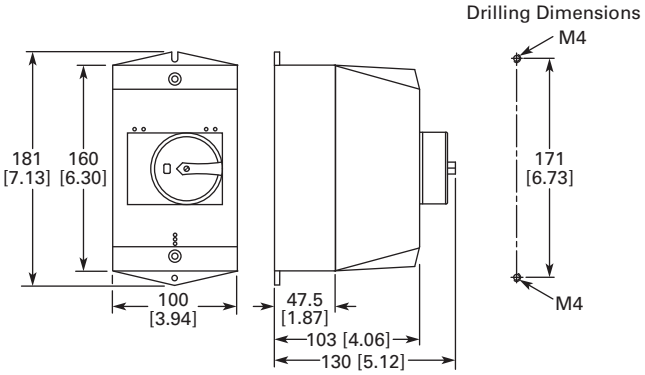


**XTPAXENCS65B, XTPAXENCS65RY, XTPAXENCSEM65B, XTPAXENCSEM65RY, XTPAXENAS55B, XTPAXENAS55RY, XTPAXENASEM55B, XTPAXENASEM55RY, XTPAXENCSH65B, XTPAXENCSH65RY, XTPAXENCSEMH65B, XTPAXENCSEMH65RY**

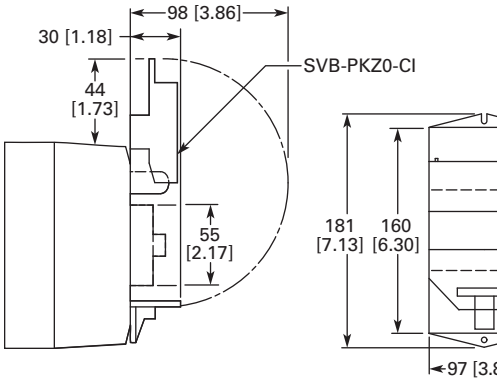


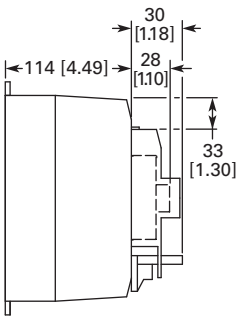


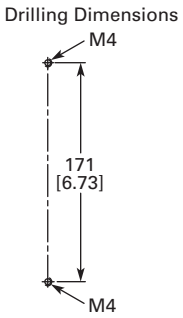


**XTPAXENCS65_ + XTPAXPL1, XTPAXENCSEM65_ + XTPAXPL1**

1

Approximate Dimensions in mm [in]

## Insulated Enclosures for Flush Mounting of XTPR…B Manual Motor Protectors

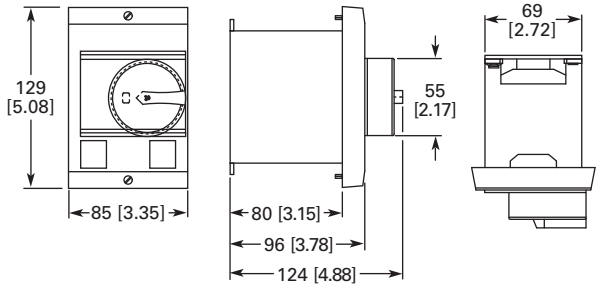


**XTPAXENCF40, XTPAXENCF55B, XTPAXENCF55RY**

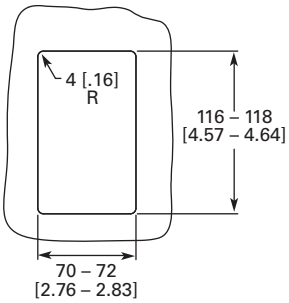


**Mounting Cutout XTPAXENCF_**

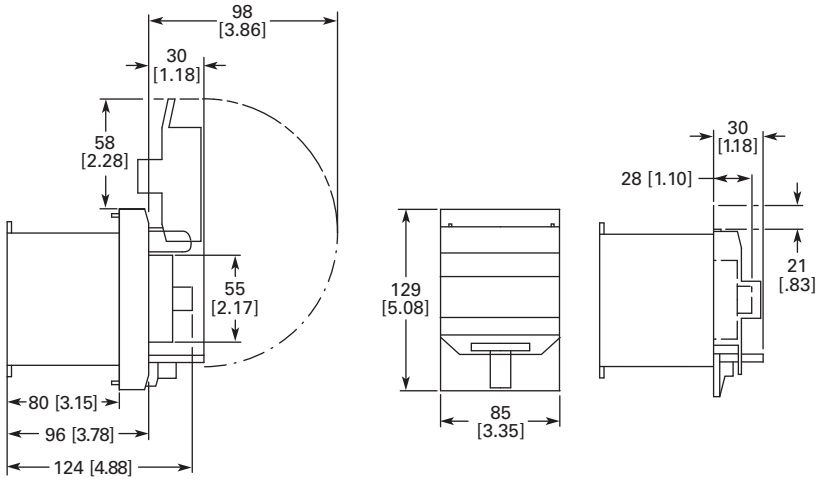


**XTPAXENCF55_ + XTPAXPL3**

Approximate Dimensions in mm [in]

## Insulated Enclosures for Surface Mounting of XTPR...D Manual Motor Protectors

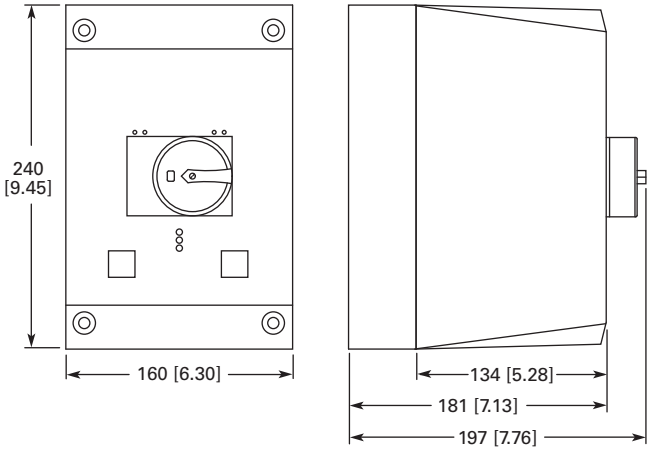


**XTPAXENCSD65B, XTPAXENCSD65RY**

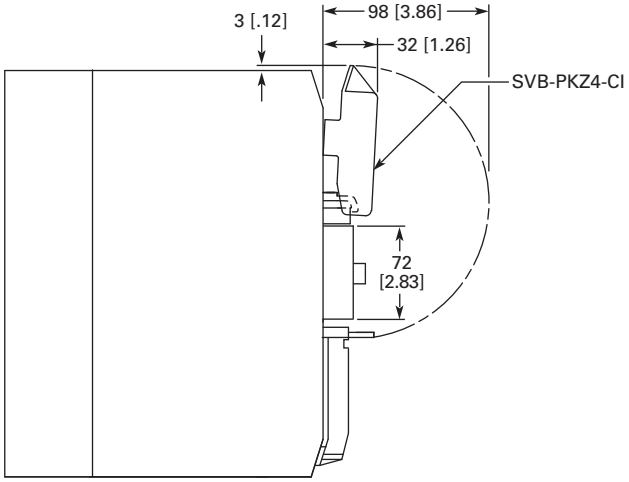


**XTPAXENCSD65_ + XTPAXPL2**

Drilling Dimensions

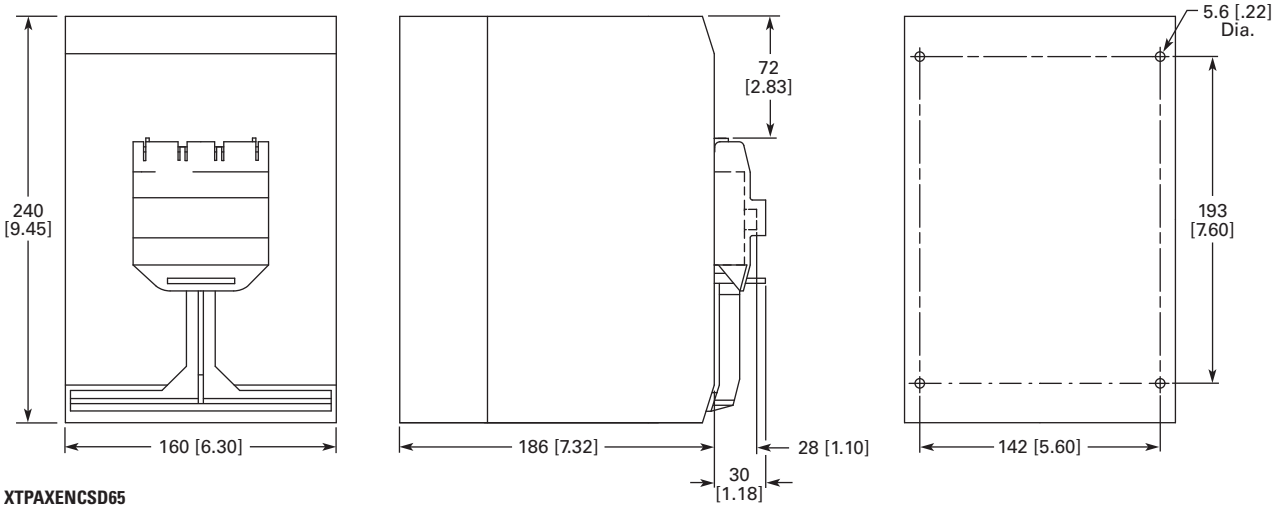


**XTPAXENCSD65**

## Rotary Handle Mechanism—XTPAXRHM_

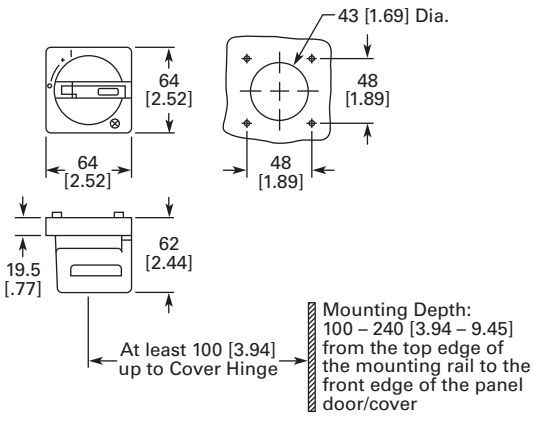

Approximate Dimensions in mm [in]

***Pushbutton MMP Enclosures***

## Insulated Enclosures for Surface Mounting

### XTPB Pushbutton Motor-Protective Circuit Breakers

| Catalog Number | H x W x D |
|---|---|
| **Global Usage** | |
| **XTPBXENCS40** | 158 x 80 x 116.5 [6.22 x 3.15 x 4.59] |
| **XTPBXENCS65** | 158 x 80 x 116.5 [6.22 x 3.15 x 4.59] |
| **XTPBXENCSLO65** | 158 x 80 x 129.5 [6.22 x 3.15 x 5.10] |
| **XTPBXENCSLE65** | 158 x 80 x 129.5 [6.22 x 3.15 x 5.10] |
| **XTPBXENCSES65** | 158 x 80 x 177.2 [6.22 x 3.15 x 6.98] |
| **XTPBXENCSEK65** | 158 x 80 x 177.2 [6.22 x 3.15 x 6.98] |

### XTPB Pushbutton Manual Motor Protectors

| Catalog Number | H x W x D |
|---|---|
| **North American Usage** | |
| **XTPBXENAS41** | 158 x 80 x 116.5 [6.22 x 3.15 x 4.59] |
| **XTPBXENAS65** | 158 x 80 x 116.5 [6.22 x 3.15 x 4.59] |
| **XTPBXENASLO65** | 158 x 80 x 129.5 [6.22 x 3.15 x 5.10] |
| **XTPBXENASLE65** | 158 x 80 x 129.5 [6.22 x 3.15 x 5.10] |
| **XTPBXENASES65** | 158 x 80 x 177.2 [6.22 x 3.15 x 6.98] |
| **XTPBXENASEK65** | 158 x 80 x 177.2 [6.22 x 3.15 x 6.98] |

### Frame B (0.1–32A) XTPR Motor-Protective Circuit Breakers

| Catalog Number | H x W x D |
|---|---|
| **Global Usage** | |
| **XTPAXENCS41** | 160 x 100 x 104 [6.30 x 3.94 x 4.09] |
| **XTPAXENCS65B** | 160 x 100 x 130 [6.30 x 3.94 x 5.12] |
| **XTPAXENCS65RY** | 160 x 100 x 130 [6.30 x 3.94 x 5.12] |
| **XTPAXENCS40** | 158 x 80 x 100 [6.22 x 3.15 x 3.94] |
| **XTPAXENCS55B** | 158 x 80 x 125.5 [6.22 x 3.15 x 4.94] |
| **XTPAXENCS55RY** | 158 x 80 x 125.5 [6.22 x 3.15 x 4.94] |

### Frame B (0.1–32A) XTPR Rotary Manual Motor Protectors

| Catalog Number | H x W x D |
|---|---|
| **North American Usage** | |
| **XTPAXENAS55B** | 160 x 100 x 130 [6.30 x 3.94 x 5.12] |
| **XTPAXENAS55RY** | 160 x 100 x 130 [6.30 x 3.94 x 5.12] |

### Frame B XTPR (0.1–32A) Rotary Motor-Protective Circuit Breakers with XTPAXFAEM20 Early-Make Front-Mount Auxiliary Contact

| Catalog Number | H x W x D |
|---|---|
| **Global Usage** | |
| **XTPAXENCSEM65B** | 160 x 100 x 130 [6.30 x 3.94 x 5.12] |
| **XTPAXENCSEM65RY** | 160 x 100 x 130 [6.30 x 3.94 x 5.12] |
| **XTPAXENCSEM55B** | 158 x 80 x 100 [6.22 x 3.15 x 3.94] |
| **XTPAXENCSEM55RY** | 158 x 80 x 100 [6.22 x 3.15 x 3.94] |

### Frame B XTPR (0.1–32A) Rotary Manual Motor Protectors with XTPAXFAEM20 Early-Make Front-Mount Auxiliary Contact

| Catalog Number | H x W x D |
|---|---|
| **North American Usage** | |
| **XTPAXENCSEM55B** | 160 x 100 x 130 [6.30 x 3.94 x 5.12] |
| **XTPAXENCSEM55RY** | 160 x 100 x 130 [6.30 x 3.94 x 5.12] |

### Frame D (10–65A) Rotary Motor-Protective Circuit Breakers

| Catalog Number | H x W x D |
|---|---|
| **Global and North American Usage** | |
| **XTPAXENCSD65B** | 240 x 160 x 197 [9.45 x 6.30 x 7.76] |
| **XTPAXENCSD65RY** | 240 x 160 x 197 [9.45 x 6.30 x 7.76] |

## Insulated Enclosures for Flush Mounting

### XTPB Pushbutton Manual Motor Protectors

| Catalog Number | H x W x D |
|---|---|
| **Global and North American Usage** | |
| **XTPBXENCF40** | 129 x 90.2 x 115.2 [5.08 x 3.55 x 4.54] |
| **XTPBXENCF55** | 129 x 90.2 x 115.2 [5.08 x 3.55 x 4.54] |
| **XTPBXENCFLO55** | 129 x 90.2 x 115.2 [5.08 x 3.55 x 4.54] |
| **XTPBXENCFLE55** | 129 x 90.2 x 115.2 [5.08 x 3.55 x 4.54] |
| **XTPBXENCFES55** | 129 x 90.2 x 175.9 [5.08 x 3.55 x 6.93] |
| **XTPBXENCFEK55** | 129 x 90.2 x 175.9 [5.08 x 3.55 x 6.93] |

### Frame B (0.1–32A) XTPR Rotary Manual Motor Protectors

| Catalog Number | H x W x D |
|---|---|
| **Global Usage** | |
| **XTPAXENCF40** | 129 x 85 x 96 [5.08 x 3.35 x 3.78] |
| **XTPAXENCF55B** | 129 x 85 x 124 [5.08 x 3.35 x 4.88] |
| **XTPAXENCF55RY** | 129 x 85 x 124 [5.08 x 3.35 x 4.88] |

**Combination Motor Controllers**



## Contents


| *Description* | *Page* |
|---|---|
| Relays and Timers | V5-T1-3 |
| Miniature Controls | V5-T1-18 |
| Contactors and Starters | V5-T1-35 |
| Thermal Overload Relays | V5-T1-128 |
| C440/*XT* Electronic Overload Relay | V5-T1-141 |
| Manual Motor Protectors | V5-T1-157 |
| Combination Motor Controllers | |
| Features | V5-T1-194 |
| Standards and Certifications | V5-T1-194 |
| Catalog Number Selection | V5-T1-195 |
| Product Selection | V5-T1-195 |
| Accessories | V5-T1-203 |
| Technical Data and Specifications | V5-T1-205 |
| Dimensions | V5-T1-211 |
| An Eaton Green Solution | |
| *XT* Electronic Manual Motor Protector | V5-T1-216 |
| EMS—Electronic Motor Starter | V5-T1-229 |
| Reference Data | V5-T1-231 |


## Combination Motor Controllers

### Product Description

Eaton's ***XT*** IEC open non-reversing and reversing manual motor controllers combine a manual motor protector with an IEC contactor(s) to provide a complete motor protection solution by combining motor disconnect function, thermal overload protection, magnetic short-circuit protection and remote control operation in one compact, assembled unit. these assembled manual motor controllers cover motors with FLA ratings from 0.10A to 65A.

The UL 508 Type F labeled combination motor controller (CMC) includes a line side adapter (LSA). These assembled combination motor controllers cover motors with FLA ratings from 0.10A to 65A.

### Application Description

The ***XT*** IEC non-reversing and reversing manual and combination motor controllers can be used in the following applications:

#### *Group Motor Control*

Manual motor controllers (MMCs) are ideal for group motor applications where an upstream breaker or fuse provides protection for two or more motors. ***XT*** manual motor controllers (MMC) combine a manual motor protector, a wiring connector link and IEC contactor.

#### *Individual Branch Circuit for Motor Loads*

Combination motor controller (CMC), consisting of a line side adapter, manual motor protector, wiring connector link and IEC contactor, provide an efficient means to build an entire branch circuit. The ***XT*** CMC is UL 508 Type F approved, meaning it is "self-protected" and doesn't require the use of an additional fuse or breaker for short circuit protection. This approval means CMC's can be used in place of a traditional fuse-starter and breaker-starter motor circuit.

Based around two key functional components (MMP and contactor), the CMC is a very cost effective means to build a branch circuit. Fuses and breakers must be oversized to prevent tripping during motor start up, and thus these oversized devices can no longer protect the motor. To compensate for this, a motor overload relay is necessary to protect the motor.

The manual motor protector was invented in Germany by Moeller to correct this inefficiency. The MMP operates similarly to a circuit breaker, except the inrush (magnetic) protection is set to 14 times the running current, thus accounting for motor start-up current without the necessity to oversize. A overcurrent dial was added to the face of the MMP to serve as the motor overload protection. This "motor protective circuit breaker", as it is referred to in Europe, now accomplishes all four key functions of a motor branch circuit: disconnect, short circuit, motor controller and motor overload protection. With the addition of a contactor, users have the ability to remotely control the starter device.

Whether a single motor application or a multiple motor application, CMC's are an ideal solution for machinery OEMs and panel builders.

1

## Features

- ON/OFF rotary handle with lockout provision
- Visible trip indication
- Test trip function
- Motor applications from 0.10A to 65A
- Class 10 overload protection
- Built-in heater and magnetic trip elements to protect the motor
- Phase loss sensitivity
- Type 2 coordination
- Ambient compensated up to 55°C [140°F]
- Control inputs located at front of starter for easy access and wiring
- Wide range of coils
- DIN rail mount—XTSC…BB_
- Mounting plates—XTSC…BC_, XTSC…D motor controllers
- Adjustment dial for setting motor FLA
- Short-circuit trip at 14 times the maximum setting of the FLA adjustment dial
- UL 508 Type F CMC high fault short-circuit ratings
- 1NO-1NC auxiliary contact as standard on manual motor controller and combination motor controller

## Standards and Certifications

UL 508 Type F combination motor controller

- IEC Type 2 Approved per IEC 60947-4-1
- UL Listed File No. E245398
- CE Mark

**Note:** For Type 2 Coordination of MMCs, see **Page V5-T1-232**. Protection in different controller types

## MMC and CMC Applications

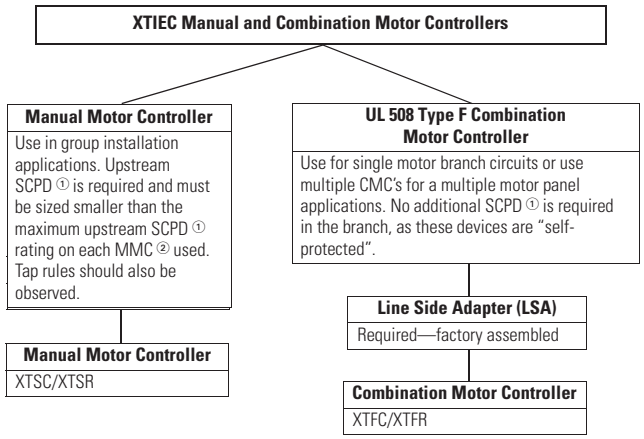


***Notes***

Technical Paper AP03402001E.

Line side adapters are not required for non-U.S. applications. Most countries outside of the U.S. classify the MMP as a motor-protective circuit breaker.

① SCPD = Short-circuit protective device (circuit breaker, fuses).
② MMC = Manual motor controller

## Catalog Number Selection

### Combination Motor Controllers

**XT SC 012 B B A**

| Designation |
|---|
| ***XT*** = ***XT*** IEC power control |

| Type | |
|---|---|
| **SC** | = Manual motor controller—FVNR |
| **SR** | = Manual motor controller—FVR |
| **FC** | = Combination motor controller, UL 508 Type F—FVNR |
| **FR** | = Combination motor controller, UL 508 Type F—FVR |

| Rated Current of MMP | |
|---|---|
| **Frame B** | **Frame D** |
| **P16** = 0.16A | **016** = 16A |
| **P25** = 0.25A | **025** = 25A |
| **P40** = 0.40A | **032** = 32A |
| **P63** = 0.63A | **040** = 40A |
| **001** = 1A | **050** = 50A |
| **1P6** = 1.6A | **058** = 58A |
| **2P5** = 2.5A | **063** = 63A |
| **004** = 4A | |
| **6P3** = 6.3A | |
| **010** = 10A | |
| **012** = 12A | |
| **016** = 16A | |
| **020** = 20A | |
| **025** = 25A | |
| **032** = 32A | |

| Frame Size—MMP |
|---|
| **B** = 45 mm, 0.1 to 32A |
| **D** = 55 mm, 16 to 63A |

| Frame Size—Contactor |
|---|
| **B** = 45 mm, 7 to 15A |
| **C** = 45 mm, 18 to 32A |
| **D** = 55 mm, 40 to 65A |

| Coil Voltage | |
|---|---|
| **A** | = 110V 50 Hz, 120V 60 Hz |
| **B** | = 220V 50 Hz, 240V 60 Hz |
| **C** | = 415V 50 Hz, 480V 60 Hz |
| **D** | = 600V 60 Hz |
| **E** | = 208V 50 Hz |
| **F** | = 230V 50 Hz |
| **G** | = 190V 50 Hz, 220V 60 Hz |
| **H** | = 240V 50 Hz, 277V 60 Hz |
| **L** | = 380V 50 Hz, 440V 60 Hz |
| **N** | = 400V 50 Hz |
| **P** | = 380V 60 Hz |
| **R** | = 12V 50/60 Hz |
| **T** | = 24V 50/60 Hz |
| **W** | = 42V 50 Hz, 48V 60 Hz |
| **Y** | = 48V 50 Hz |
| **AD** | = 120 Vdc |
| **BD** | = 220 Vdc |
| **RD** | = 12 Vdc |
| **TD** | = 24 Vdc |
| **WD** | = 48 Vdc |

## Product Selection

### *XTSC and XTSR Manual Motor Controllers (MMC)/Starter Combinations*

**Frame B MMP + Frame B Contactor**



### Factory-Assembled Manual Motor Controller—Frame B MMP + Frame B Contactor—Maximum UL Ratings ①

| FLA Adjustment Range/Overload Release—$I_r$ (Amps) | Short-Circuit Release—$I_{rm}$ (Amps) | Three-Phase | | | | Assembled Manual Motor Controller ② | |
|---|---|---|---|---|---|---|---|
| | | 200V | 240V | 480V | 600V | Non-Reversing Catalog Number | Reversing Catalog Number |
| 0.1–0.16 | 3.2 | ③ | ③ | 1/2 | 1/2 | **XTSCP16BB_** | **XTSRP16BB_** |
| 0.16–0.25 | 3.5 | ③ | ③ | 1/2 | 1/2 | **XTSCP25BB_** | **XTSRP25BB_** |
| 0.25–0.4 | 5.6 | ③ | ③ | 1/2 | 1/2 | **XTSCP40BB_** | **XTSRP40BB_** |
| 0.4–0.63 | 8.82 | ③ | ③ | 1/2 | 1/2 | **XTSCP63BB_** | **XTSRP63BB_** |
| 0.63–1 | 14 | ③ | ③ | 1/2 | 1/2 | **XTSC001BB_** | **XTSR001BB_** |
| 1–1.6 | 22.4 | ③ | ③ | 3/4 | 1 | **XTSC1P6BB_** | **XTSR1P6BB_** |
| 1.6–2.5 | 35 | 1/2 | 1/2 | 1 | 1-1/2 | **XTSC2P5BB_** | **XTSR2P5BB_** |
| 2.5–4 | 56 | 1 | 1 | 2 | 3 | **XTSC004BB_** | **XTSR004BB_** |
| 4–6.3 | 88.2 | 1-1/2 | 1-1/2 | 3 | 5 | **XTSC6P3BB_** | **XTSR6P3BB_** |
| 6.3–10 | 140 | 3 | 3 | 7-1/2 | 7.5 | **XTSC010BB_** | **XTSR010BB_** |
| 8–12 | 168 | 3 | 3 | 7-1/2 | 7.5 | **XTSC012BB_** | **XTSR012BB_** |
| 10–16 | 224 | 3 | 3 | 10 | 7.5 | **XTSC016BB_** | — |

***Notes***

① Select manual motor controllers by full load amperes. Maximum motor ratings (kW, hp) are for reference only.

② Underscore (_) indicates magnetic coil suffix required. See **Page V5-T1-198**.

③ In this range, calculate motor rating according to rated current. Specified values to NEC 430.6(A)(1).

**Frame B MMP + Frame B Contactor**



## Factory-Assembled Motor Protective Device with Thermal and Magnetic Trip + Contactor—Maximum IEC Ratings①

| FLA Adjustment Range/Overload Release—$I_r$ (Amps) | Short-Circuit Release—$I_{rm}$ (Amps) | Three-Phase 220–240V | 380–415V | 500V | 660–690V | Assembled Manual Motor Controller ② Non-Reversing Catalog Number | Reversing Catalog Number |
|---|---|---|---|---|---|---|---|
| 0.1–0.16 | 3.2 | — | — | — | 0.06 | **XTSCP16BB_** | **XTSRP16BB_** |
| 0.16–0.25 | 3.5 | — | 0.06 | 0.06 | 0.12 | **XTSCP25BB_** | **XTSRP25BB_** |
| 0.25–0.4 | 5.6 | 0.06 | 0.09 | 0.12 | 0.18 | **XTSCP40BB_** | **XTSRP40BB_** |
| 0.4–0.63 | 8.82 | 0.09 | 0.18 | 0.25 | 0.25 | **XTSCP63BB_** | **XTSRP63BB_** |
| 0.63–1 | 14 | 0.12 | 0.25 | 0.37 | 0.55 | **XTSC001BB_** | **XTSR001BB_** |
| 1–1.6 | 22.4 | 0.25 | 0.55 | 0.75 | 1.1 | **XTSC1P6BB_** | **XTSR1P6BB_** |
| 1.6–2.5 | 35 | 0.37 | 0.75 | 1.1 | 1.5 | **XTSC2P5BB_** | **XTSR2P5BB_** |
| 2.5–4 | 56 | 0.75 | 1.5 | 2.2 | 3 | **XTSC004BB_** | **XTSR004BB_** |
| 4–6.3 | 88.2 | 1.1 | 2.2 | 3 | 4 | **XTSC6P3BB_** | **XTSR6P3BB_** |
| 6.3–10 | 140 | 2.2 | 4 | 4 | 7.5 | **XTSC010BB_** | **XTSR010BB_** |
| 8–12 | 168 | 3 | 5.5 | 5.5 | 11 | **XTSC012BB_** | **XTSR012BB_** |
| 10–16 | 224 | 4 | 7.5 | 9 | 12.5 | **XTSC016BB_** | — |

**Frame B MMP + Frame C Contactor**



## Factory-Assembled Manual Motor Controller—Frame B MMP + Frame C Contactor—Maximum UL Ratings ①

| FLA Adjustment Range/Overload Release—$I_r$ (Amps) | Short-Circuit Release—$I_{rm}$ (Amps) | Three-Phase 200V | 240V | 480V | 600V | Assembled Manual Motor Controller ② Non-Reversing Catalog Number | Reversing Catalog Number |
|---|---|---|---|---|---|---|---|
| 10–16 | 224 | 3 | 3 | 10 | 10 | **XTSC016BC_** | **XTSR016BC_** |
| 16–20 | 280 | 5 | 5 | 10 | 15 | **XTSC020BC_** | **XTSR020BC_** |
| 20–25 | 350 | 5 | 7-1/2 | 15 | 20 | **XTSC025BC_** | **XTSR025BC_** |
| 25–32 | 448 | 7-1/2 | 10 | 20 | 25 | **XTSC032BC_** | **XTSR032BC_** |

**Frame B MMP + Frame C Contactor**



## Factory-Assembled Manual Motor Controller—Frame B MMP + Frame C Contactor—Maximum IEC RatingS ①

| FLA Adjustment Range/Overload Release—$I_r$ (Amps) | Short-Circuit Release—$I_{rm}$ (Amps) | Three-Phase 220–240V | 380–415V | 500V | 660–690V | Assembled Manual Motor Controller ② Non-Reversing Catalog Number | Reversing Catalog Number |
|---|---|---|---|---|---|---|---|
| 10–16 | 224 | 4 | 7.5 | 9 | 12.5 | **XTSC016BC_** | **XTSR016BC_** |
| 16–20 | 280 | 5.5 | 9 | 12.5 | 15 | **XTSC020BC_** | **XTSR020BC_** |
| 20–25 | 350 | 5.5 | 11 | 15 | 22 | **XTSC025BC_** | **XTSR025BC_** |
| 25–32 | 448 | 7.5 | 15 | 22 | 30 | **XTSC032BC_** | **XTSR032BC_** |

***Notes***

① Select manual motor controllers by full load amperes. Maximum motor ratings (kW, hp) are for reference only.

② Underscore (_) indicates magnetic coil suffix required. See **Page V5-T1-198**.

Frame D MMP + Frame C Contactor



## Factory-Assembled Manual Motor Controller—Frame D MMP + Frame C Contactor—Maximum UL Ratings ①

| FLA Adjustment Range/Overload Release—$I_r$ (Amps) | Short-Circuit Release—$I_{rm}$ (Amps) | Three-Phase 200V | 240V | 480V | 600V | Assembled Manual Motor Controller ② Non-Reversing Catalog Number | Reversing Catalog Number |
|---|---|---|---|---|---|---|---|
| 10–16 | 224 | 3 | 5 | 10 | 15 | **XTSC016DC_** | **XTSR016DC_** |
| 16–25 | 350 | 5 | 7-1/2 | 15 | 20 | **XTSC025DC_** | **XTSR025DC_** |
| 25–32 | 448 | 7-1/2 | 10 | 20 | 30 | **XTSC032DC_** | **XTSR032DC_** |

Frame D MMP + Frame C Contactor



## Factory-Assembled Manual Motor Controller—Frame D MMP + Frame C Contactor—Maximum IEC Ratings ①

| FLA Adjustment Range/Overload Release—$I_r$ (Amps) | Short-Circuit Release—$I_{rm}$ (Amps) | Three-Phase 220–240V | 380–415V | 500V | 660–690V | Assembled Manual Motor Controller ② Non-Reversing Catalog Number | Reversing Catalog Number |
|---|---|---|---|---|---|---|---|
| 10–16 | 224 | 4 | 7.5 | 9 | 12.5 | **XTSC016DC_** | **XTSR016DC_** |
| 16–25 | 350 | 5.5 | 12.5 | 12.5 | 22 | **XTSC025DC_** | **XTSR025DC_** |
| 25–32 | 448 | 7.5 | 15 | 17.5 | 22 | **XTSC032DC_** | **XTSR032DC_** |

Frame D MMP + Frame D Contactor

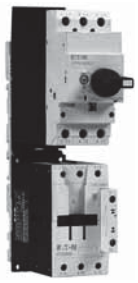

## Factory-Assembled Manual Motor Controller—Frame D MMP + Frame D Contactor—Maximum UL Ratings ①

| FLA Adjustment Range/Overload Release—$I_r$ (Amps) | Short-Circuit Release—$I_{rm}$ (Amps) | Three-Phase 200V | 240V | 480V | 600V | Assembled Manual Motor Controller ② Non-Reversing Catalog Number | Reversing Catalog Number |
|---|---|---|---|---|---|---|---|
| 32–40 | 560 | 10 | 15 | 30 | 30 | **XTSC040DD_** | **XTSR040DD_** |
| 40–50 | 700 | 15 | 15 | 30 | — | **XTSC050DD_** | **XTSR050DD_** |
| 50–58 | 812 | 15 | 15 | 40 | — | **XTSC058DD_** | **XTSR058DD_** |
| 55–65 | 882 | 15 | 15 | 40 | — | **XTSC063DD_** | **XTSR063DD_** |

***Notes***

① Select manual motor controllers by full load amperes. Maximum motor ratings (kW, hp) are for reference only.

② Underscore (_) indicates magnetic coil suffix required. See **Page V5-T1-198**.

**Frame D MMP + Frame D Contactor**



## Factory-Assembled Manual Motor Controller—Frame D MMP + Frame D Contactor—Maximum IEC Ratings ①

| FLA Adjustment Range/Overload Release—$I_r$ (Amps) | Short-Circuit Release—$I_{rm}$ (Amps) | Three-Phase 220–240V | Three-Phase 380–415V | Three-Phase 500V | Three-Phase 660–690V | Assembled Manual Motor Controller ② Non-Reversing Catalog Number | Assembled Manual Motor Controller ② Reversing Catalog Number |
|---|---|---|---|---|---|---|---|
| 32–40 | 560 | 11 | 20 | 22 | 30 | **XTSC040DD_** | **XTSR040DD_** |
| 40–50 | 700 | 14 | 25 | 30 | 45 | **XTSC050DD_** | **XTSR050DD_** |
| 50–58 | 812 | 17 | 30 | 37 | 55 | **XTSC058DD_** | **XTSR058DD_** |
| 55–65 | 882 | 18.5 | 34 | 37 | 55 | **XTSC063DD_** | **XTSR063DD_** |

## AC and DC Coil Suffixes

| Coil Voltage | Suffix Code | Coil Voltage | Suffix Code | Coil Voltage | Suffix Code | Coil Voltage | Suffix Code |
|---|---|---|---|---|---|---|---|
| **Frame B Contactors** | | | | **Frame C and D Contactors** | | | |
| 110V 50 Hz, 120V 60 Hz | **A** | 380V 50 Hz, 440V 60 Hz | **L** | 110V 50 Hz, 120V 60 Hz | **A** | 380V 50 Hz, 440V 60 Hz | **L** |
| 220V 50 Hz, 240V 60 Hz | **B** | 400V 50 Hz | **N** | 220V 50 Hz, 240V 60 Hz | **B** | 400V 50 Hz | **N** |
| 230V 50 Hz | **F** | 380V 60 Hz | **P** | 230V 50 Hz | **F** | 380V 60 Hz | **P** |
| 24V 50/60 Hz | **T** | 12V 50/60 Hz | **R** | 24V 50/60 Hz | **T** | 12V 50/60 Hz | **R** |
| 24 Vdc | **TD** ③ | 42V 50 Hz, 48V 60 Hz | **W** | 24–27 Vdc | **TD** ③ | 42V 50 Hz, 48V 60 Hz | **W** |
| 415V 50 Hz, 480V 60 Hz | **C** | 48V 50 Hz | **Y** | 415V 50 Hz, 480V 60 Hz | **C** | 48V 50 Hz | **Y** |
| 600V 60 Hz | **D** | 120 Vdc | **AD** ③ | 550V 50 Hz, 600V 60 Hz | **D** | 110–130 Vdc | **AD** ③ |
| 208V 60 Hz | **E** | 220 Vdc | **BD** ③ | 208V 60 Hz | **E** | 200–240 Vdc | **BD** ③ |
| 190V 50 Hz, 220V 60 Hz | **G** | 12 Vdc | **RD** ③ | 190V 50 Hz, 220V 60 Hz | **G** | 12–14 Vdc | **RD** ③ |
| 240V 50 Hz, 277V 60 Hz | **H** | 48 Vdc | **WD** ③ | 240V 50 Hz, 277V 60 Hz | **H** | 48–60 Vdc | **WD** ③ |

***Notes***

The assembled manual motor controller (MMC) consists of an XTPR manual motor protector (MMP) and an XTCE contactor. For Frame B MMP + Frame B contactor assemblies, the XTSC and XTSR can be mounted directly on DIN rail without an adapter. The contactors are supported mechanically with a mechanical connection element (included in XTPAXTPCB, XTPAXRPCRB). For MMCs using a Frame C or Frame D contactor, the assembly is mounted via a DIN rail adapter plate (XTPAXTPCPC, XTPAXTPCPD) and the electrical connection is made with electrical contact modules (XTPAXECMC, XTPAXECMD), both included in XTPAXTPCC and XTPAXTPCD.

Service Factor (SF)—Setting Ir of current scale in dependence of load factor:

SF = 1.15 → $I_r = 1 \times I_{n\ mot}$

SF = 1 → $I_r = 0.9 \times I_{n\ mot}$

Single-phasing sensitivity to IEC/EN 60947-4-1, VDE 0660 Part 102.

① Select manual motor controllers by full load amperes. Maximum motor ratings (kW, hp) are for reference only.

② Underscore (_) indicates magnetic coil suffix required. See AC and DC coil suffixes above.

③ With DC operation: Integrated diode-resistor combination, coil rating 2.6W.

## Non-Reversing Manual Motor Controller Power Circuit

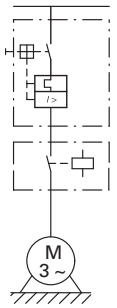


## Reversing Manual Motor Controller Power Circuit

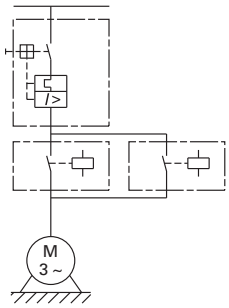

*XTFC and XTFR Combination Motor Controllers (CMC), UL 508 Type F*

1

**Frame B MMP + Two Frame B Contactors**



## Factory-Assembled Type F Combination Motor Controller—Frame B MMP + Frame B Contactor—Maximum UL Ratings ①

| FLA Adjustment Range/Overload Release—$I_r$ (Amps) | Short-Circuit Release—$I_{rm}$ (Amps) | Three-Phase | | | | Assembled Manual Motor Controller ② | |
|---|---|---|---|---|---|---|---|
| | | 200V | 240V | 480V | 600V | Non-Reversing Catalog Number | Reversing Catalog Number |
| 0.16–0.25 | 3.5 | ③ | ③ | 1/2 | 1/2 | **XTFCP25BB_** | **XTFRP25BB_** |
| 0.25–0.4 | 5.6 | ③ | ③ | 1/2 | 1/2 | **XTFCP40BB_** | **XTFRP40BB_** |
| 0.4–0.63 | 8.82 | ③ | ③ | 1/2 | 1/2 | **XTFCP63BB_** | **XTFRP63BB_** |
| 0.63–1 | 14 | ③ | ③ | 1/2 | 1/2 | **XTFC001BB_** | **XTFR001BB_** |
| 1–1.6 | 22.4 | ③ | ③ | 3/4 | 1 | **XTFC1P6BB_** | **XTFR1P6BB_** |
| 1.6–2.5 | 35 | 1/2 | 1/2 | 1 | 1-1/2 | **XTFC2P5BB_** | **XTFR2P5BB_** |
| 2.5–4 | 56 | 1 | 1 | 2 | 3 | **XTFC004BB_** | **XTFR004BB_** |
| 4–6.3 | 88.2 | 1-1/2 | 1-1/2 | 3 | 5 | **XTFC6P3BB_** | **XTFR6P3BB_** |
| 6.3–10 | 140 | 3 | 3 | 7-1/2 | 7.5 | **XTFC010BB_** | **XTFR010BB_** |
| 8–12 | 168 | 3 | 3 | 7-1/2 | — | **XTFC012BB_** | **XTFR012BB_** |
| 10–16 | 224 | 3 | 5 | 10 | — | **XTFC016BB_** | — |

## Factory-Assembled Type F Combination Motor Controller—Frame B MMP + Frame B Contactor—Maximum IEC Ratings ①

| FLA Adjustment Range/Overload Release—$I_r$ (Amps) | Short-Circuit Release—$I_{rm}$ (Amps) | Three-Phase | | | | Assembled Manual Motor Controller ② | |
|---|---|---|---|---|---|---|---|
| | | 220–240V | 380–415V | 500V | 660–690V | Non-Reversing Catalog Number | Reversing Catalog Number |
| 0.1–0.16 | 2.2 | — | — | — | 0.06 | **XTFCP16BB_** | **XTFRP16BB_** |
| 0.16–0.25 | 3.5 | — | 0.06 | 0.06 | 0.12 | **XTFCP25BB_** | **XTFRP25BB_** |
| 0.25–0.4 | 5.6 | 0.06 | 0.09 | 0.12 | 0.18 | **XTFCP40BB_** | **XTFRP40BB_** |
| 0.4–0.63 | 8.82 | 0.09 | 0.18 | 0.25 | 0.25 | **XTFCP63BB_** | **XTFRP63BB_** |
| 0.63–1 | 14 | 0.12 | 0.25 | 0.37 | 0.55 | **XTFC001BB_** | **XTFR001BB_** |
| 1–1.6 | 22.4 | 0.25 | 0.55 | 0.75 | 1.1 | **XTFC1P6BB_** | **XTFR1P6BB_** |
| 1.6–2.5 | 35 | 0.37 | 0.75 | 1.1 | 1.5 | **XTFC2P5BB_** | **XTFR2P5BB_** |
| 2.5–4 | 56 | 0.75 | 1.5 | 2.2 | 3 | **XTFC004BB_** | **XTFR004BB_** |
| 4–6.3 | 88.2 | 1.1 | 2.2 | 3 | 4 | **XTFC6P3BB_** | **XTFR6P3BB_** |
| 6.3–10 | 140 | 2.2 | 4 | 4 | 7.5 | **XTFC010BB_** | **XTFR010BB_** |
| 8–12 | 168 | 3 | 5.5 | 5.5 | 11 | **XTFC012BB_** | **XTFR012BB_** |
| 10–16 | 224 | 4 | 7.5 | 9 | 12.5 | **XTFC016BB_** | — |

***Notes***

① Select combination motor controllers by full load amperes. Maximum motor ratings (kW, hp) are for reference only.

② Underscore (_) indicates magnetic coil suffix required. See **Page V5-T1-202**.

③ In this range, calculate motor rating according to rated current. Specified values to NEC 430.6(A)(1).

## Factory-Assembled Type F Combination Motor Controller—Frame B MMP + Frame C Contactor—Maximum UL Ratings ①

| FLA Adjustment Range/Overload Release—$I_r$ (Amps) | Short-Circuit Release—$I_{rm}$ (Amps) | Three-Phase | | | | Assembled Manual Motor Controller ② | |
|---|---|---|---|---|---|---|---|
| | | 200V | 240V | 480V | 600V | Non-Reversing Catalog Number | Reversing Catalog Number |
| 10–16 | 224 | 3 | 5 | 10 | — | **XTFC016BC_** | **XTFR016BC_** |
| 16–20 | 280 | 5 | 5 | — | — | **XTFC020BC_** | **XTFR020BC_** |
| 20–25 | 350 | 5 | 7-1/2 | 15 | — | **XTFC025BC_** | **XTFR025BC_** |
| 25–32 | 448 | 7-1/2 | 10 | 20 | — | **XTFC032BC_** | **XTFR032BC_** |

## Factory-Assembled Type F Combination Motor Controller—Frame B MMP + Frame C Contactor—Maximum IEC Ratings ①

| FLA Adjustment Range/Overload Release—$I_r$ (Amps) | Short-Circuit Release—$I_{rm}$ (Amps) | Three-Phase | | | | Assembled Manual Motor Controller ② | |
|---|---|---|---|---|---|---|---|
| | | 220–240V | 380–415V | 500V | 660–690V | Non-Reversing Catalog Number | Reversing Catalog Number |
| 10–16 | 224 | 4 | 7.5 | 9 | 12.5 | **XTFC016BC_** | **XTFR016BC_** |
| 16–20 | 280 | 5.5 | 9 | 12.5 | 15 | **XTFC020BC_** | **XTFR020BC_** |
| 20–25 | 350 | 5.5 | 11 | 15 | 22 | **XTFC025BC_** | **XTFR025BC_** |
| 25–32 | 448 | 7.5 | 15 | 22 | 30 | **XTFC032BC_** | **XTFR032BC_** |

***Notes***

① Select combination motor controllers by full load amperes. Maximum motor ratings (kW, hp) are for reference only.

② Underscore (_) indicates magnetic coil suffix required. See **Page V5-T1-202**.

## Factory-Assembled Type F Combination Motor Controller—Frame D MMP + Frame C Contactor—Maximum UL Ratings ①

| FLA Adjustment Range/Overload Release—$I_r$ (Amps) | Short-Circuit Release—$I_{rm}$ (Amps) | Three-Phase | | | | Assembled Manual Motor Controller ② | |
|---|---|---|---|---|---|---|---|
| | | 200V | 240V | 480V | 600V | Non-Reversing Catalog Number | Reversing Catalog Number |
| 10–16 | 224 | 3 | 5 | 10 | 10 | **XTFC016DC_** | **XTFR016DC_** |
| 16–25 | 350 | 5 | 7-1/2 | 15 | 20 | **XTFC025DC_** | **XTFR025DC_** |
| 25–32 | 448 | 7-1/2 | 10 | 25 | 30 | **XTFC032DC_** | **XTFR032DC_** |

## Factory-Assembled Type F Combination Motor Controller—Frame D MMP + Frame C Contactor—Maximum IEC Ratings ①

| FLA Adjustment Range/Overload Release—$I_r$ (Amps) | Short-Circuit Release—$I_{rm}$ (Amps) | Three-Phase | | | | Assembled Manual Motor Controller ② | |
|---|---|---|---|---|---|---|---|
| | | 220–240V | 380–415V | 500V | 660–690V | Non-Reversing Catalog Number | Reversing Catalog Number |
| 10–16 | 224 | 4 | 7.5 | 9 | 12.5 | **XTFC016DC_** | **XTFR016DC_** |
| 16–25 | 350 | 5.5 | 12.5 | 12.5 | 22 | **XTFC025DC_** | **XTFR025DC_** |
| 25–32 | 448 | 7.5 | 15 | 17.5 | 22 | **XTFC032DC_** | **XTFR032DC_** |

## Factory-Assembled Type F Combination Motor Controller—Frame D MMP + Frame D Contactor—Maximum UL Ratings ①

| FLA Adjustment Range/Overload Release—$I_r$ (Amps) | Short-Circuit Release—$I_{rm}$ (Amps) | Three-Phase | | | | Assembled Manual Motor Controller ② | |
|---|---|---|---|---|---|---|---|
| | | 200V | 240V | 480V | 600V | Non-Reversing Catalog Number | Reversing Catalog Number |
| 32–40 | 560 | 10 | 15 | 30 | 30 | **XTFC040DD_** | **XTFR040DD_** |
| 40–50 | 700 | 10 | 15 | 30 | — | **XTFC050DD_** | **XTFR050DD_** |
| 50–58 | 812 | 15 | 15 | 40 | — | **XTFC058DD_** | **XTFR058DD_** |
| 55–65 | 882 | 15 | 15 | 40 | — | **XTFC063DD_** | **XTFR063DD_** |

***Notes***

① Select combination motor controllers by full load amperes. Maximum motor ratings (kW, hp) are for reference only.

② Underscore (_) indicates magnetic coil suffix required. See **Page V5-T1-202**.

## Factory-Assembled Type F Combination Motor Controller—Frame D MMP + Frame D Contactor—Maximum IEC Ratings ①

| FLA Adjustment Range/Overload Release—$I_r$ (Amps) | Short-Circuit Release—$I_{rm}$ (Amps) | Three-Phase 220–240V | 380–415V | 500V | 660–690V | Assembled Manual Motor Controller ② Non-Reversing Catalog Number | Reversing Catalog Number |
|---|---|---|---|---|---|---|---|
| 32–40 | 560 | 11 | 20 | 22 | 30 | **XTFC040DD_** | **XTFR040DD_** |
| 40–50 | 700 | 14 | 25 | 30 | 45 | **XTFC050DD_** | **XTFR050DD_** |
| 50–58 | 812 | 17 | 30 | 37 | 55 | **XTFC058DD_** | **XTFR058DD_** |
| 55–65 | 882 | 18.5 | 34 | 37 | 55 | **XTFC063DD_** | **XTFR063DD_** |

## AC and DC Coil Suffixes

| Coil Voltage | Suffix Code | Coil Voltage | Suffix Code | Coil Voltage | Suffix Code | Coil Voltage | Suffix Code |
|---|---|---|---|---|---|---|---|
| **Frame B Contactors** | | | | **Frame C and D Contactors** | | | |
| 110V 50 Hz, 120V 60 Hz | **A** | 380V 50 Hz, 440V 60 Hz | **L** | 110V 50 Hz, 120V 60 Hz | **A** | 380V 50 Hz, 440V 60 Hz | **L** |
| 220V 50 Hz, 240V 60 Hz | **B** | 400V 50 Hz | **N** | 220V 50 Hz, 240V 60 Hz | **B** | 400V 50 Hz | **N** |
| 230V 50 Hz | **F** | 380V 60 Hz | **P** | 230V 50 Hz | **F** | 380V 60 Hz | **P** |
| 24V 50/60 Hz | **T** | 12V 50/60 Hz | **R** | 24V 50/60 Hz | **T** | 12V 50/60 Hz | **R** |
| 24 Vdc | **TD** ③ | 42V 50 Hz, 48V 60 Hz | **W** | 24–27 Vdc | **TD** ③ | 42V 50 Hz, 48V 60 Hz | **W** |
| 415V 50 Hz, 480V 60 Hz | **C** | 48V 50 Hz | **Y** | 415V 50 Hz, 480V 60 Hz | **C** | 48V 50 Hz | **Y** |
| 600V 60 Hz | **D** | 120 Vdc | **AD** ③ | 550V 50 Hz, 600V 60 Hz | **D** | 110–130 Vdc | **AD** ③ |
| 208V 60 Hz | **E** | 220 Vdc | **BD** ③ | 208V 60 Hz | **E** | 200–240 Vdc | **BD** ③ |
| 190V 50 Hz, 220V 60 Hz | **G** | 12 Vdc | **RD** ③ | 190V 50 Hz, 220V 60 Hz | **G** | 12–14 Vdc | **RD** ③ |
| 240V 50 Hz, 277V 60 Hz | **H** | 48 Vdc | **WD** ③ | 240V 50 Hz, 277V 60 Hz | **H** | 48–60 Vdc | **WD** ③ |

***Notes***

The assembled manual motor controller (MMC) consists of an XTPR manual motor protector (MMP) and an XTCE contactor. For Frame B MMP + Frame B contactor assemblies, the XTSC and XTSR can be mounted directly on DIN rail without an adapter. The contactors are supported mechanically with a mechanical connection element (included in XTPAXTPCB, XTPAXRPCRB). For 16A and above, the assembly is mounted via a DIN rail adapter plate (XTPAXTPCPC, XTPAXTPCPD) and the electrical connection is made with electrical contact modules (XTPAXECMC, XTPAXECMD), both included in XTPAXTPCC and XTPAXTPCD.

Service Factor (SF)—Setting $I_r$ of current scale in dependence of load factor:

SF = 1.15 → $I_r = 1 \times I_{n\ mot}$

SF = 1 → $I_r = 0.9 \times I_{n\ mot}$

Single-phasing sensitivity to IEC/EN 60947-4-1, VDE 0660 Part 102.

① Select combination motor controllers by full load amperes. Maximum motor ratings (kW, hp) are for reference only.

② Underscore (_) indicates magnetic coil suffix required. See AC and DC coil suffixes above.

③ With DC operation: Integrated diode-resistor combination, coil rating 2.6W.

## XTFC Manual Motor Controller

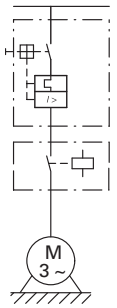


## XTFR Manual Motor Controller

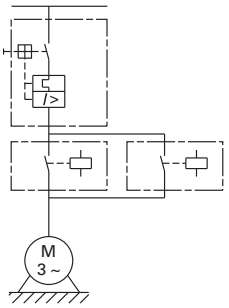

## Accessories

### *Line Side Adapters*

Line side adapters are required for use with XTPR MMPs only when used as Type E self-protected manual combination starters or as part of XTFC or XTFR Type F combination motor controllers. Not required for group installation.

#### Line Side Adapters

| | Description | Catalog Number |
|---|---|---|
| **XTPAXLSA**  | For use with Frame B MMPs (up to 32A) | **XTPAXLSA** |
| **XTPAXLSAD**  | For use with Frame D MMPs (up to 40A) | **XTPAXLSAD** |

### *Combination Connection Kits*

Combination connection kits include the necessary components to field assemble a manual motor controller with an MMP (XTPR) and contactor (XTCE).

#### Non-Reversing Starters

| | For Use with … | Description/Composed of … | Std. Pack ① | Catalog Number |
|---|---|---|---|---|
| **XTPAXTPCB** 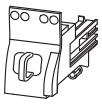 | XTPR…B + XTCE…B | Mechanical connection element for XTPR…B and contactor | 1 | **XTPAXTPCB** |
| | | Main current wiring between XTPR…B and contactor in toolless plug connection | 1 | |
| | | Cable guidance | 1 | |
| | | Use as contactor auxiliary switch XTCEXFAT_. Control cable guidance: max. six cables up to 2.5 $mm^2$ external diameter or four cables up to 3.5 $mm^2$ external diameter | | |
| **XTPAXEMCB** 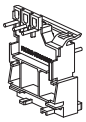 | XTPR…B + XTCE…B | Mechanical connection element for XTPR…B and contactor | 1 | **XTPAXEMCB** |
| | | Main current wiring between XTPR…B and contactor screw in type connection | 1 | |
| **XTPAXTPCC and XTPAXTPCD** 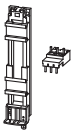 | XTPR…B + XTCE…C | DIN rail adapter plate | 1 | **XTPAXTPCC** |
| | XTPR…D + XTCE…D | Main current wiring between XTPR and contactor | 1 | **XTPAXTPCD** |

#### Reversing Starters

| | For Use with … | Description/Composed of … | Std. Pack ① | Catalog Number |
|---|---|---|---|---|
| **XTPAXTPCRB** 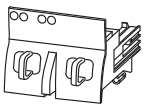 | XTPR…B + XTCE…B01_ | Mechanical connection element for XTPR…B and contactor | 1 | **XTPAXTPCRB** |
| | | Reversing starter main current wiring in toolless plug connection | 1 | |
| | | Control cables for electrical interlocking in toolless plug connection— K1M: A1–K2M: 21, K1M: 21–K2M: A1, K1M: A2–K2M: A2 | 1 | |
| | | Cable guidance | 1 | |
| | | Use as contactor auxiliary switch XTCEXFAT_. Control cable guidance: max. six cables up to 2.5 $mm^2$ external diameter or four cables up to 3.5 $mm^2$ external diameter. | | |
| **XTPAXTPCRC** 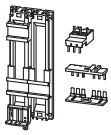 | XTPR…B + XTCE…C | DIN rail adapter plate | 1 | **XTPAXTPCRC** |
| | | Reversing starter main current wiring | 1 | |

***Note***

① Orders must be placed in multiples of package quantity listed.

## Electric Contact Module

**XTPAXEC_**

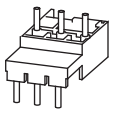

| For Use with … | Description/Composed of … | Std. Pack ① | Catalog Number |
|---|---|---|---|
| XTPR…B + XTCE…C | Main current wiring between XTPR…B and contactor | 5 | **XTPAXECMC** |
| | Use only in combination with busbar adapter | | |
| XTPR…D + XTCE…D | Main current wiring between XTPR…D and contactor | 5 | **XTPAXECMD** |
| | Use only in combination with busbar adapter | | |

## DIN Rail Adapter Plates

| | For Use with … | Description/Composed of … | Std. Pack ① | Catalog Number |
|---|---|---|---|---|
| **XTPAXTPCPB**  | XTPAXTPCB<br>XTPAXTPCRB | 45 mm wide adapter plate with one DIN rail | 4 | **XTPAXTPCPB** |
| | | Connection element for side-by-side positioning of further plates | | |
| **XTPAXTPCRPB** 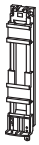 | XTPR…B + XTCE…C<br>XTPAXECMC | 45 mm wide adapter plate with one DIN rail | 4 | **XTPAXTPCRPB** |
| | | Connection element for side-by-side positioning of further plates | | |
| **XTPAXTPCPD**  | XTPAXECMD<br>XTPR…D + XTCE…C<br>XTPR…D + XTCE…D | 55 mm wide adapter plate with two DIN rails | 4 | **XTPAXTPCPD** |
| | | Connection cams for further plates | 4 | |
| | | For use with reversing and star-delta starters | | |

## Lateral Module

| For Use with … | Description/Composed of … | Std. Pack ① | Catalog Number |
|---|---|---|---|
| — | Can be grouped on the DIN rail adapter | 10 | **XTPAXLM** |
| | Expansion of the mounting width by 9 mm | | |

## Connection Element

| For Use with … | Description/Composed of … | Std. Pack ① | Catalog Number |
|---|---|---|---|
| — | For connection of several DIN rail adapters | 50 | **XTPAXCNE** |

***Note***

① Orders must be placed in multiples of package quantity listed.

## Technical Data and Specifications



### XTSC Non-Reversing Manual Motor Controllers (MMC)—Component Bill of Material

**Factory Assembled Manual Motor Protector + Contactor**

| Assembled Manual Motor Controller ① | FLA Adjustment Range/Overload Release—$I_r$ (Amps) | Component Catalog Numbers | | | |
|---|---|---|---|---|---|
| | | Manual Motor Protector | Combination Connection Kit | Contactor ① | Manual Motor Protector Auxiliary Contact |
| **XTSC Frame B MMP + Frame B Contactor** | | | | | |
| **XTSCP16BB_** | 0.1–0.16 | XTPRP16BC1 | XTPAXTPCB | XTCE007B10_ | XTPAXFA11 |
| **XTSCP25BB_** | 0.16–0.25 | XTPRP25BC1 | XTPAXTPCB | XTCE007B10_ | XTPAXFA11 |
| **XTSCP40BB_** | 0.25–0.4 | XTPRP40BC1 | XTPAXTPCB | XTCE007B10_ | XTPAXFA11 |
| **XTSCP63BB_** | 0.4–0.63 | XTPRP63BC1 | XTPAXTPCB | XTCE007B10_ | XTPAXFA11 |
| **XTSC001BB_** | 0.63–1 | XTPR001BC1 | XTPAXTPCB | XTCE007B10_ | XTPAXFA11 |
| **XTSC1P6BB_** | 1–1.6 | XTPR1P6BC1 | XTPAXTPCB | XTCE007B10_ | XTPAXFA11 |
| **XTSC2P5BB_** | 1.6–2.5 | XTPR2P5BC1 | XTPAXTPCB | XTCE007B10_ | XTPAXFA11 |
| **XTSC004BB_** | 2.5–4 | XTPR004BC1 | XTPAXTPCB | XTCE007B10_ | XTPAXFA11 |
| **XTSC6P3BB_** | 4–6.3 | XTPR6P3BC1 | XTPAXTPCB | XTCE007B10_ | XTPAXFA11 |
| **XTSC010BB_** | 6.3–10 | XTPR010BC1 | XTPAXTPCB | XTCE009B10_ | XTPAXFA11 |
| **XTSC012BB_** | 8–12 | XTPR012BC1 | XTPAXTPCB | XTCE012B10_ | XTPAXFA11 |
| **XTSC016BB_** | 10–16 | XTPR016BC1 | XTPAXTPCB | XTCE015B10_ | XTPAXFA11 |
| **XTSC Frame B MMP + Frame C Contactor** | | | | | |
| **XTSC016BC_** | 10–16 | XTPR016BC1 | XTPAXTPCC | XTCE018C10_ | XTPAXFA1 |
| **XTSC020BC_** | 16–20 | XTPR020BC1 | XTPAXTPCC | XTCE025C10_ | XTPAXFA11 |
| **XTSC025BC_** | 20–25 | XTPR025BC1 | XTPAXTPCC | XTCE025C10_ | XTPAXFA11 |
| **XTSC032BC_** | 25–32 | XTPR032BC1 | XTPAXTPCC | XTCE032C10_ | XTPAXFA11 |
| **XTSC Frame D MMP + Frame C Contactor** | | | | | |
| **XTSC016DC_** | 10–16 | XTPR016DC1 | ② | XTCE018C10_ | XTPAXFA1 |
| **XTSC025DC_** | 16–25 | XTPR025DC1 | ② | XTCE025C10_ | XTPAXFA11 |
| **XTSC032DC_** | 25–32 | XTPR032DC1 | ② | XTCE032C10_ | XTPAXFA11 |
| **XTSC Frame D MMP + Frame D Contactor** | | | | | |
| **XTSC040DD_** | 32–40 | XTPR040DC1 | XTPAXTPCD ③ | XTCE040D00_ | XTPAXFA11 |
| **XTSC050DD_** | 40–50 | XTPR050DC1 | XTPAXTPCD ③ | XTCE050D00_ | XTPAXFA11 |
| **XTSC058DD_** | 50–58 | XTPR058DC1 | XTPAXTPCD ③ | XTCE065D00_ | XTPAXFA11 |
| **XTSC063DD_** | 55–65 | XTPR063DC1 | XTPAXTPCD ③ | XTCE065D00_ | XTPAXFA11 |

***Notes***

① Underscore (_) indicates magnetic coil suffix required. See **Page V5-T1-202**.

② The connection between the XTPR…DC1 and the XTCE…C_ contactor will be made with flexible wire and mounted to the DIN rail adapter plate (XTPAXTPCPD).

③ The reversing connection between the XTPR…DC1 and the (2) XTCE…C_ contactors will be accomplished by using the non-reversing combination connection kit (XTPAXTPCD), Frame D reversing link kit (XTCEXRLD), additional DIN rail adapter plate (XTPAXTPCPD) and DIN adapter connection element (XTPAXCNE).

1

## XTSR Reversing Manual Motor Controllers (MMC)—Component Bill of Material

**Factory Assembled Manual Motor Protector + Contactor**

| Assembled Manual Motor Controller ① | FLA Adjustment Range/Overload Release—$I_r$ (Amps) | Component Catalog Numbers<br>Manual Motor Protector | Combination Connection Kit | Contactor ① | Manual Motor Protector Auxiliary Contact |
|---|---|---|---|---|---|
| **XTSR Frame B MMP + Frame B Contactor** | | | | | |
| **XTSRP16BB_** | 0.1–0.16 | XTPRP16BC1 | XTPAXTPCRB | (2) XTCE007B01_ | XTPAXFA11 |
| **XTSRP25BB_** | 0.16–0.25 | XTPRP25BC1 | XTPAXTPCRB | (2) XTCE007B01_ | XTPAXFA11 |
| **XTSRP40BB_** | 0.25–0.4 | XTPRP40BC1 | XTPAXTPCRB | (2) XTCE007B01_ | XTPAXFA11 |
| **XTSRP63BB_** | 0.4–0.63 | XTPRP63BC1 | XTPAXTPCRB | (2) XTCE007B01_ | XTPAXFA11 |
| **XTSR001BB_** | 0.63–1 | XTPR001BC1 | XTPAXTPCRB | (2) XTCE007B01_ | XTPAXFA11 |
| **XTSR1P6BB_** | 1–1.6 | XTPR1P6BC1 | XTPAXTPCRB | (2) XTCE007B01_ | XTPAXFA11 |
| **XTSR2P5BB_** | 1.6–2.5 | XTPR2P5BC1 | XTPAXTPCRB | (2) XTCE007B01_ | XTPAXFA11 |
| **XTSR004BB_** | 2.5–4 | XTPR004BC1 | XTPAXTPCRB | (2) XTCE007B01_ | XTPAXFA11 |
| **XTSR6P3BB_** | 4–6.3 | XTPR6P3BC1 | XTPAXTPCRB | (2) XTCE007B01_ | XTPAXFA11 |
| **XTSR010BB_** | 6.3–10 | XTPR010BC1 | XTPAXTPCRB | (2) XTCE009B01_ | XTPAXFA11 |
| **XTSR012BB_** | 8–12 | XTPR012BC1 | XTPAXTPCRB | (2) XTCE012B01_ | XTPAXFA11 |
| **XTSR Frame B MMP + Frame C Contactor** | | | | | |
| **XTSR016BC_** | 10–16 | XTPR016BC1 | XTPAXTPCRC | (2) XTCE018C01 | XTPAXFA11 |
| **XTSR020BC_** | 16–20 | XTPR020BC1 | XTPAXTPCRC | (2) XTCE025C01_ | XTPAXFA11 |
| **XTSR025BC_** | 20–25 | XTPR025BC1 | XTPAXTPCRC | (2) XTCE025C01_ | XTPAXFA11 |
| **XTSR032BC_** | 25–32 | XTPR032BC1 | XTPAXTPCRC | (2) XTCE032C01_ | XTPAXFA11 |
| **XTSR Frame D MMP + Frame C Contactor** | | | | | |
| **XTSR016DC_** | 10–16 | XTPR016DC1 | ② | (2) XTCE018C01 | XTPAXFA11 |
| **XTSR025DC_** | 16–25 | XTPR025DC1 | ② | (2) XTCE025C01_ | XTPAXFA11 |
| **XTSR032DC_** | 25–32 | XTPR032DC1 | ② | (2) XTCE032C01_ | XTPAXFA11 |
| **XTSR Frame D MMP + Frame D Contactor** | | | | | |
| **XTSR040DD_** | 32–40 | XTPR040DC1 | ③ | (2) XTCE040D00_ | XTPAXFA11 |
| **XTSR050DD_** | 40–50 | XTPR050DC1 | ③ | (2) XTCE050D00_ | XTPAXFA11 |
| **XTSR058DD_** | 50–58 | XTPR058DC1 | ③ | (2) XTCE065D00_ | XTPAXFA11 |
| **XTSR063DD_** | 55–65 | XTPR063DC1 | ③ | (2) XTCE065D00_ | XTPAXFA11 |

***Notes***

① Underscore (_) indicates magnetic coil suffix required. See **Page V5-T1-202**.

② The connection between the XTPR…DC1 and the XTCE…C_ contactor will be made with flexible wire and mounted to the DIN rail adapter plate (XTPAXTPCPD).

③ The reversing connection between the XTPR…DC1 and the (2) XTCE…C_ contactors will be accomplished by using the non-reversing combination connection kit (XTPAXTPCD), Frame D reversing link kit (XTCEXRLD), additional DIN rail adapter plate (XTPAXTPCPD) and DIN adapter connection element (XTPAXCNE).

## XTFC Non-Reversing Combination Motor Controllers—Component Bill of Material

**Factory Assembled Manual Motor Protector + Contactor + Line Side Adapter**

| Assembled Combination Motor Controller ① | FLA Adjustment Range/ Overload Release—$I_r$ (Amps) | Component Catalog Numbers | | | | |
|---|---|---|---|---|---|---|
| | | Line Side Adapter | Manual Motor Protector | Combination Connection Kit | Contactor ① | Manual Motor Protector Auxiliary Contact |
| **XTFC Frame B MMP + Frame B Contactor** | | | | | | |
| **XTFCP16BB_** | 0.1–0.16 | XTPAXLSA | XTPRP16BC1 | XTPAXTPCB | XTCE007B10_ | XTPAXFA11 |
| **XTFCP25BB_** | 0.16–0.25 | XTPAXLSA | XTPRP25BC1 | XTPAXTPCB | XTCE007B10_ | XTPAXFA11 |
| **XTFCP40BB_** | 0.25–0.4 | XTPAXLSA | XTPRP40BC1 | XTPAXTPCB | XTCE007B10_ | XTPAXFA11 |
| **XTFCP63BB_** | 0.4–0.63 | XTPAXLSA | XTPRP63BC1 | XTPAXTPCB | XTCE007B10_ | XTPAXFA11 |
| **XTFC001BB_** | 0.63–1 | XTPAXLS | XTPR001BC1 | XTPAXTPCB | XTCE007B10_ | XTPAXFA11 |
| **XTFC1P6BB_** | 1–1.6 | XTPAXLSA | XTPR1P6BC1 | XTPAXTPCB | XTCE007B10_ | XTPAXFA11 |
| **XTFC2P5BB_** | 1.6–2.5 | XTPAXLSA | XTPR2P5BC1 | XTPAXTPCB | XTCE007B10_ | XTPAXFA11 |
| **XTFC004BB_** | 2.5–4 | XTPAXLSA | XTPR004BC1 | XTPAXTPCB | XTCE007B10_ | XTPAXFA11 |
| **XTFC6P3BB_** | 4–6.3 | XTPAXLSA | XTPR6P3BC1 | XTPAXTPCB | XTCE007B10_ | XTPAXFA11 |
| **XTFC010BB_** | 6.3–10 | XTPAXLSA | XTPR010BC1 | XTPAXTPCB | XTCE009B10_ | XTPAXFA11 |
| **XTFC012BB_** | 8–12 | XTPAXLSA | XTPR012BC1 | XTPAXTPCB | XTCE012B10_ | XTPAXFA11 |
| **XTFC016BB_** | 10–16 | XTPAXLSA | XTPR016BC1 | XTPAXTPCB | XTCE015B10_ | XTPAXFA11 |
| **XTFC Frame B MMP + Frame C Contactor** | | | | | | |
| **XTFC016BC_** | 10–16 | XTPAXLSA | XTPR016BC1 | XTPAXTPCC | XTCE018C10_ | XTPAXFA11 |
| **XTFC020BC_** | 16–20 | XTPAXLSA | XTPR020BC1 | XTPAXTPCC | XTCE025C10_ | XTPAXFA11 |
| **XTFC025BC_** | 20–25 | XTPAXLSA | XTPR025BC1 | XTPAXTPCC | XTCE025C10_ | XTPAXFA11 |
| **XTFC032BC_** | 25–32 | XTPAXLSA | XTPR032BC1 | XTPAXTPCC | XTCE032C10_ | XTPAXFA11 |
| **XTFC Frame D MMP + Frame C Contactor** | | | | | | |
| **XTFC016DC_** | 10–16 | XTPAXLSAD | XTPR016DC1 | ② | XTCE018C10_ | XTPAXFA11 |
| **XTFC025DC_** | 16–25 | XTPAXLSAD | XTPR025DC1 | ② | XTCE025C10_ | XTPAXFA11 |
| **XTFC032DC_** | 25–32 | XTPAXLSAD | XTPR032DC1 | ② | XTCE032C10_ | XTPAXFA11 |
| **XTFC Frame D MMP + Frame D Contactor** | | | | | | |
| **XTFC040DD_** | 32–40 | XTPAXLSAD | XTPR040DC1 | XTPAXTPCD ③ | XTCE040D00_ | XTPAXFA11 |
| **XTFC050DD_** | 40–50 | XTPAXLSAD | XTPR050DC1 | XTPAXTPCD ③ | XTCE050D00_ | XTPAXFA11 |
| **XTFC058DD_** | 50–58 | XTPAXLSAD | XTPR058DC1 | XTPAXTPCD ③ | XTCE065D00_ | XTPAXFA11 |
| **XTFC063DD_** | 55–65 | XTPAXLSAD | XTPR063DC1 | XTPAXTPCD ③ | XTCE065D00_ | XTPAXFA11 |

***Notes***

① Underscore (_) indicates magnetic coil suffix required. See **Page V5-T1-202**.

② The connection between the XTPR…DC1 and the XTCE…C_ contactor will be made with flexible wire and mounted to the DIN rail adapter plate (XTPAXTPCPD).

③ The reversing connection between the XTPR…DC1 and the (2) XTCE…C_ contactors will be accomplished by using the non-reversing combination connection kit (XTPAXTPCD), Frame D reversing link kit (XTCEXRLD), additional DIN rail adapter plate (XTPAXTPCPD) and DIN adapter connection element (XTPAXCNE).

1

## XTFR Reversing Combination Motor Controllers—Component Bill of Material

**Factory Assembled Manual Motor Protector + Contactor + Line Side Adapter**

| Assembled Combination Motor Controller ① | FLA Adjustment Range/ Overload Release—$I_r$ (Amps) | Component Catalog Numbers | | | | |
|---|---|---|---|---|---|---|
| | | Line Side Adapter | Manual Motor Protector | Combination Connection Kit | Contactor ① | Manual Motor Protector Auxiliary Contact |
| **XTFR Frame B MMP + Frame B Contactor** | | | | | | |
| **XTFRP16BB_** | 0.1–0.16 | XTPAXLSA | XTPRP16BC1 | XTPAXTPCRB | (2) XTCE007B01_ | XTPAXFA11 |
| **XTFRP25BB_** | 0.16–0.25 | XTPAXLSA | XTPRP25BC1 | XTPAXTPCRB | (2) XTCE007B01_ | XTPAXFA11 |
| **XTFRP40BB_** | 0.25–0.4 | XTPAXLSA | XTPRP40BC1 | XTPAXTPCRB | (2) XTCE007B01_ | XTPAXFA11 |
| **XTFRP63BB_** | 0.4–0.63 | XTPAXLSA | XTPRP63BC1 | XTPAXTPCRB | (2) XTCE007B01_ | XTPAXFA11 |
| **XTFR001BB_** | 0.63–1 | XTPAXLSA | XTPR001BC1 | XTPAXTPCRB | (2) XTCE007B01_ | XTPAXFA11 |
| **XTFR1P6BB_** | 1–1.6 | XTPAXLSA | XTPR1P6BC1 | XTPAXTPCRB | (2) XTCE007B01_ | XTPAXFA11 |
| **XTFR2P5BB_** | 1.6–2.5 | XTPAXLSA | XTPR2P5BC1 | XTPAXTPCRB | (2) XTCE007B01_ | XTPAXFA11 |
| **XTFR004BB_** | 2.5–4 | XTPAXLSA | XTPR004BC1 | XTPAXTPCRB | (2) XTCE007B01_ | XTPAXFA11 |
| **XTFR6P3BB_** | 4–6.3 | XTPAXLSA | XTPR6P3BC1 | XTPAXTPCRB | (2) XTCE007B01_ | XTPAXFA11 |
| **XTFR010BB_** | 6.3–10 | XTPAXLSA | XTPR010BC | XTPAXTPCRB | (2) XTCE009B01_ | XTPAXFA11 |
| **XTFR012BB_** | 8–12 | XTPAXLSA | XTPR012BC1 | XTPAXTPCRB | (2) XTCE012B01_ | XTPAXFA11 |
| **XTFR Frame B MMP + Frame C Contactor** | | | | | | |
| **XTFR016BC_** | 10–16 | XTPAXLSA | XTPR016BC1 | XTPAXTPCRC | (2) XTCE018C01_ | XTPAXFA11 |
| **XTFR020BC_** | 16–20 | XTPAXLSA | XTPR020BC1 | XTPAXTPCRC | (2) XTCE025C01_ | XTPAXFA11 |
| **XTFR025BC_** | 20–25 | XTPAXLSA | XTPR025BC1 | XTPAXTPCRC | (2) XTCE025C01_ | XTPAXFA11 |
| **XTFR032BC_** | 25–32 | XTPAXLSA | XTPR032BC1 | XTPAXTPCRC | (2) XTCE032C01_ | XTPAXFA11 |
| **XTFR Frame D MMP + Frame C Contactor** | | | | | | |
| **XTFR016DC_** | 10–16 | XTPAXLSAD | XTPR016DC1 | ② | (2) XTCE018C01_ | XTPAXFA11 |
| **XTFR025DC_** | 16–25 | XTPAXLSAD | XTPR025DC1 | ② | (2) XTCE025C01_ | XTPAXFA11 |
| **XTFR032DC_** | 25–32 | XTPAXLSAD | XTPR032DC1 | ② | (2) XTCE032C01_ | XTPAXFA11 |
| **XTFR Frame D MMP + Frame D Contactor** | | | | | | |
| **XTFR040DD_** | 32–40 | XTPAXLSAD | XTPR040DC1 | ③ | (2) XTCE040D00_ | XTPAXFA11 |
| **XTFR050DD_** | 40–50 | XTPAXLSAD | XTPR050DC1 | ③ | (2) XTCE050D00_ | XTPAXFA11 |
| **XTFR058DD_** | 50–58 | XTPAXLSAD | XTPR058DC1 | ③ | (2) XTCE065D00_ | XTPAXFA11 |
| **XTFR063DD_** | 55–65 | XTPAXLSAD | XTPR063DC1 | ③ | (2) XTCE065D00_ | XTPAXFA11 |

***Notes***

① Underscore (_) indicates magnetic coil suffix required. See **Page V5-T1-202**.

② The connection between the XTPR…DC1 and the XTCE…C_ contactor will be made with flexible wire and mounted to the DIN rail adapter plate (XTPAXTPCPD).

③ The reversing connection between the XTPR…DC1 and the (2) XTCE…C_ contactors will be accomplished by using the non-reversing combination connection kit (XTPAXTPCD), Frame D reversing link kit (XTCEXRLD), additional DIN rail adapter plate (XTPAXTPCPD) and DIN adapter connection element (XTPAXCNE).

## Manual Motor Controllers Short-Circuit Ratings for UL/CSA Group Installations

**XTSC and XTSR Manual Motor Controllers (MMC)**

| Assembled Controller ① | | FLA Adjustment Range/Overload Release— $I_r$ (Amps) | Short-Circuit Release— $I_{rm}$ (Amps) | Group Installation, UL/CSA Max. rms Symmetrical Short-Circuit Ratings (kA/kA with Current Limiter) | | | Maximum Upstream Protective Device (A/A with Current Limiter) | |
|---|---|---|---|---|---|---|---|---|
| Non-Reversing | Reversing | | | 240V | 480V | 600V | Maximum Fuse 600V | Maximum Circuit Breaker 600V |
| **XTSC and XTSR Frame B MMP + Frame B Contactor** | | | | | | | | |
| XTSCP16BB_ | XTSRP16BB_ | 0.1–0.16 | 2.2 | 50 | 50 | 50 | 600 | 600 |
| XTSCP25BB_ | XTSRP25BB_ | 0.16–0.25 | 3.5 | 50 | 50 | 50 | 600 | 600 |
| XTSCP40BB_ | XTSRP40BB_ | 0.25–0.4 | 5.6 | 50 | 50 | 50 | 600 | 600 |
| XTSCP63BB_ | XTSRP63BB_ | 0.4–0.63 | 8.82 | 50 | 50 | 50 | 600 | 600 |
| XTSC001BB_ | XTSR001BB_ | 0.63–1 | 14 | 50 | 50 | 50 | 600 | 600 |
| XTSC1P6BB_ | XTSR1P6BB_ | 1–1.6 | 22.4 | 50 | 50 | 50 | 600 | 600 |
| XTSC2P5BB_ | XTSR2P5BB_ | 1.6–2.5 | 35 | 50 | 50 | 50 | 600 | 600 |
| XTSC004BB_ | XTSR004BB_ | 2.5–4 | 56 | 50 | 50 | 50 | 600 | 600 |
| XTSC6P3BB_ | XTSR6P3BB_ | 4–6.3 | 88.2 | 50 | 50 | 50 | 600 | 600 |
| XTSC010BB_ | XTSR010BB_ | 6.3–10 | 140 | 22 | 22 | 22 | 150/600 | 125/600 |
| XTSC012BB_ | XTSR012BB_ | 8–12 | 168 | 10/50 | 10/50 | 10/50 | 150/600 | 125/600 |
| XTSC016BB_ | — | 10–16 | 224 | 10/50 | 10/50 | 10/50 | 150/600 | 125/600 |
| **XTSC and XTSR Frame B MMP + Frame C Contactor** | | | | | | | | |
| XTSC016BC_ | XTSR016BC_ | 10–16 | 224 | 10/50 | 10/50 | 10/50 | 150/600 | 125/600 |
| XTSC020BC_ | XTSR020BC_ | 16–20 | 280 | 10/18 | 10/18 | 10/18 | 150/600 | 125/600 |
| XTSC025BC_ | XTSR025BC_ | 20–25 | 350 | 10/18 | 10/18 | 10/18 | 150/600 | 125/600 |
| XTSC032BC_ | XTSR032BC_ | 25–32 | 448 | 5/18 | 5/18 | 5/18 | 150/600 | 125/600 |
| **XTSC and XTSR Frame D MMP + Frame C Contactor** | | | | | | | | |
| XTSC016DC_ | XTSR016DC_ | 10–16 | 224 | 50 | 50 | 10 | 600 | 600 |
| XTSC025DC_ | XTSR025DC_ | 16–25 | 350 | 50 | 50 | 10 | 600 | 600 |
| XTSC032DC_ | XTSR032DC_ | 25–32 | 448 | 50 | 50 | 10 | 600 | 600 |
| **XTSC and XTSR Frame D MMP + Frame D Contactor** | | | | | | | | |
| XTSC040DD_ | XTSR040DD_ | 32–40 | 560 | 50 | 50 | 10 | 600 | 600 |
| XTSC050DD_ | XTSR050DD_ | 40–50 | 700 | 50 | 50 | 10 | 600 | 600 |
| XTSC058DD | XTSR058DD_ | 50–58 | 812 | 50 | 50 | — | — | — |
| XTSC063DD_ | XTSR063DD_ | 55–65 | 882 | 50 | 50 | — | — | — |

***Note***

① Underscore (_) indicates magnetic coil suffix required. See **Page V5-T1-202**.

1

## Combination Motor Controllers Short-Circuit Ratings for UL 508 Type F Application

**XTFC and XTFR Combination Motor Controllers (CMC), UL 508 Type F**

| Assembled Controller ① | | FLA Adjustment Range/Overload Release— $I_r$ (Amps) | Short-Circuit Release— $I_{rm}$ (Amps) | UL 508 Type F Application Max. rms Symmetrical Short-Circuit Ratings (kA) | | | Maximum Upstream Protective Device (A) ② | |
|---|---|---|---|---|---|---|---|---|
| Non-Reversing | Reversing | | | 240V | 480/277V | 600/347V | Maximum Fuse 600V | Maximum Circuit Breaker 600V |
| **XTFC and XTFR Frame B MMP + Frame B Contactor** | | | | | | | | |
| **XTFCP16BB_** | **XTFRP16BB_** | 0.1–0.16 | 2.2 | 65 | 65 | — | Not required | Not required |
| **XTFCP25BB_** | **XTFRP25BB_** | 0.16–0.25 | 3.5 | 65 | 65 | — | Not required | Not required |
| **XTFCP40BB_** | **XTFRP40BB_** | 0.25–0.4 | 5.6 | 65 | 65 | — | Not required | Not required |
| **XTFCP63BB_** | **XTFRP63BB_** | 0.4–0.63 | 8.82 | 65 | 65 | — | Not required | Not required |
| **XTFC001BB_** | **XTFR001BB_** | 0.63–1 | 14 | 65 | 65 | — | Not required | Not required |
| **XTFC1P6BB_** | **XTFR1P6BB_** | 1–1.6 | 22.4 | 65 | 65 | — | Not required | Not required |
| **XTFC2P5BB_** | **XTFR2P5BB_** | 1.6–2.5 | 35 | 65 | 65 | — | Not required | Not required |
| **XTFC004BB_** | **XTFR004BB_** | 2.5–4 | 56 | 65 | 65 | — | Not required | Not required |
| **XTFC6P3BB_** | **XTFR6P3BB_** | 4–6.3 | 88.2 | 65 | 65 | — | Not required | Not required |
| **XTFC010BB_** | **XTFR010BB_** | 6.3–10 | 140 | 65 | 65 | — | Not required | Not required |
| **XTFC012BB_** | **XTFR012BB_** | 8–12 | 168 | 50 | 50 | — | Not required | Not required |
| **XTFC016BB_** | — | 10–16 | 224 | 50 | 50 | — | Not required | Not required |
| **XTFC and XTFR Frame B MMP + Frame C Contactor** | | | | | | | | |
| **XTFC016BC_** | **XTFR016BC_** | 10–16 | 224 | 18 | 18 | — | Not required | Not required |
| **XTFC020BC_** | **XTFR020BC_** | 16–20 | 280 | 18 | 18 | — | Not required | Not required |
| **XTFC025BC_** | **XTFR025BC_** | 20–25 | 350 | 18 | 18 | — | Not required | Not required |
| **XTFC032BC_** | **XTFR032BC_** | 25–32 | 448 | 18 | 18 | — | Not required | Not required |
| **XTFC and XTFR Frame D MMP + Frame C Contactor** | | | | | | | | |
| **XTFC016DC_** | **XTFR016DC_** | 10–16 | 224 | 65 | 65 | 50 | Not required | Not required |
| **XTFC025DC_** | **XTFR025DC_** | 16–25 | 350 | 65 | 65 | 50 | Not required | Not required |
| **XTFC032DC_** | **XTFR032DC_** | 25–32 | 448 | 65 | 65 | 50 | Not required | Not required |
| **XTFC and XTFR Frame D MMP + Frame D Contactor** | | | | | | | | |
| **XTFC040DD_** | **XTFR040DD_** | 32–40 | 560 | 65 | 65 | 50 | Not required | Not required |
| **XTFC050DD_** | **XTFR050DD_** | 40–50 | 700 | 65 | 65 | — | Not required | Not required |
| **XTFC058DD_** | **XTFR058DD_** | 50–58 | 812 | 65 | 65 | — | Not required | Not required |
| **XTFC063DD_** | **XTFR063DD_** | 55–65 | 882 | 65 | 65 | — | Not required | Not required |

***Notes***

① Underscore (_) indicates magnetic coil suffix required. See **Page V5-T1-202**.

② For UL 508 Type F applications, the combination motor controller assembly does not require a dedicated upstream protective device in the panel, thus a maximum rating is not required.

## Dimensions

Approximate Dimensions in mm [in]

### XTSC...BB_

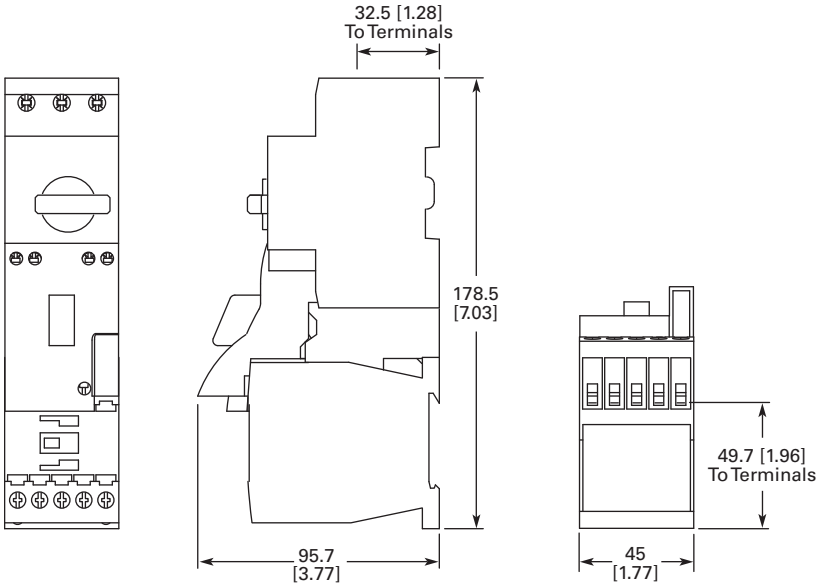


### XTSR...BB_

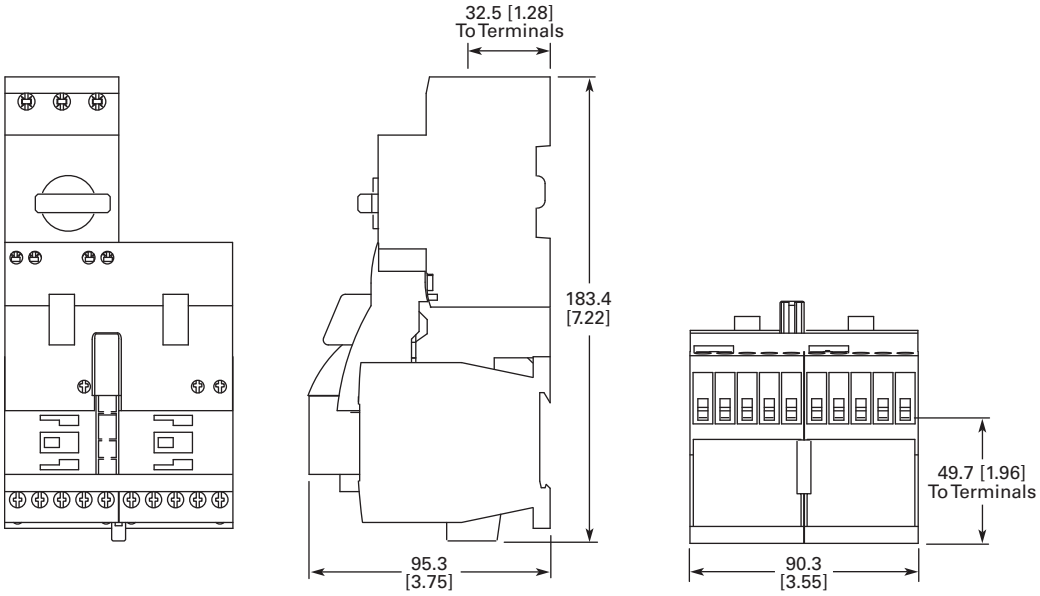

1

Approximate Dimensions in mm [in]

## XTSC...BC_

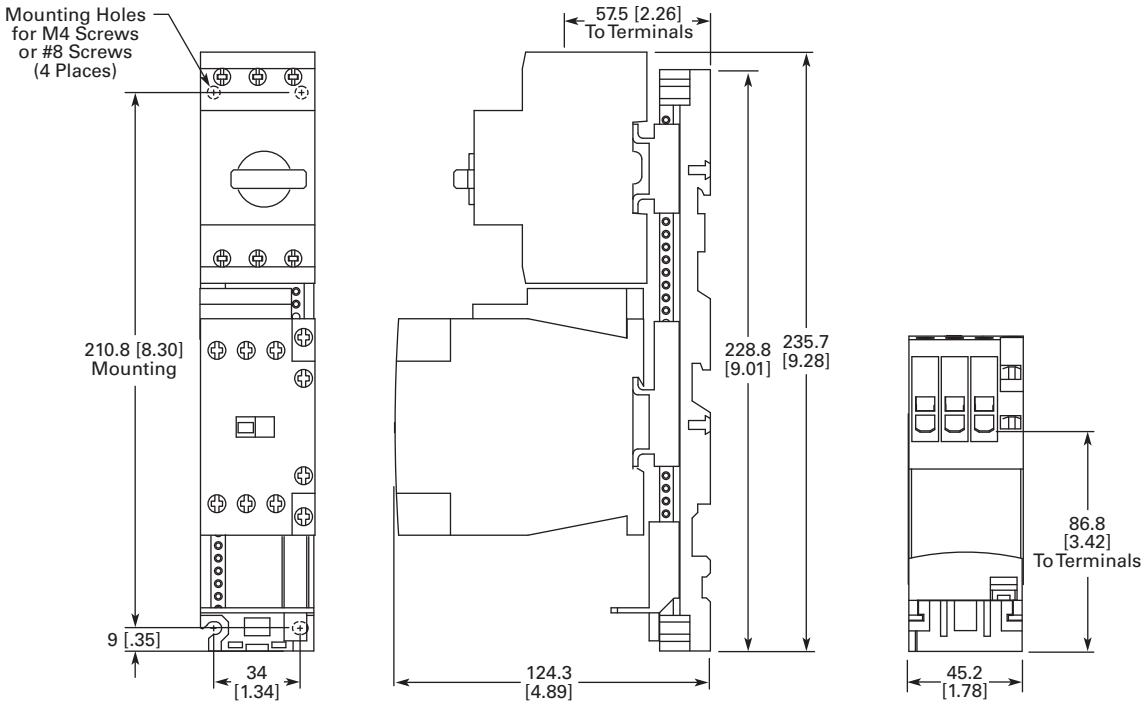


## XTSR...BC_

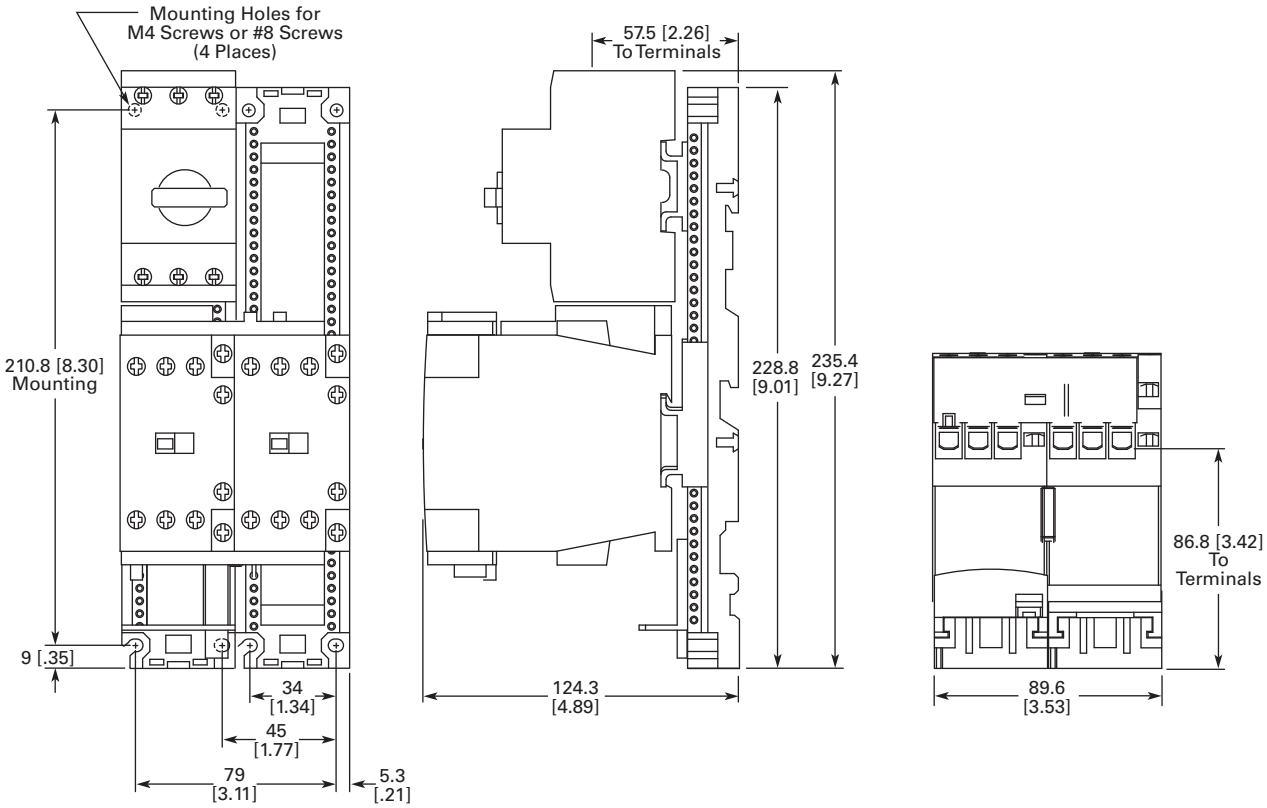

Approximate Dimensions in mm [in]

## XTSC...DD_

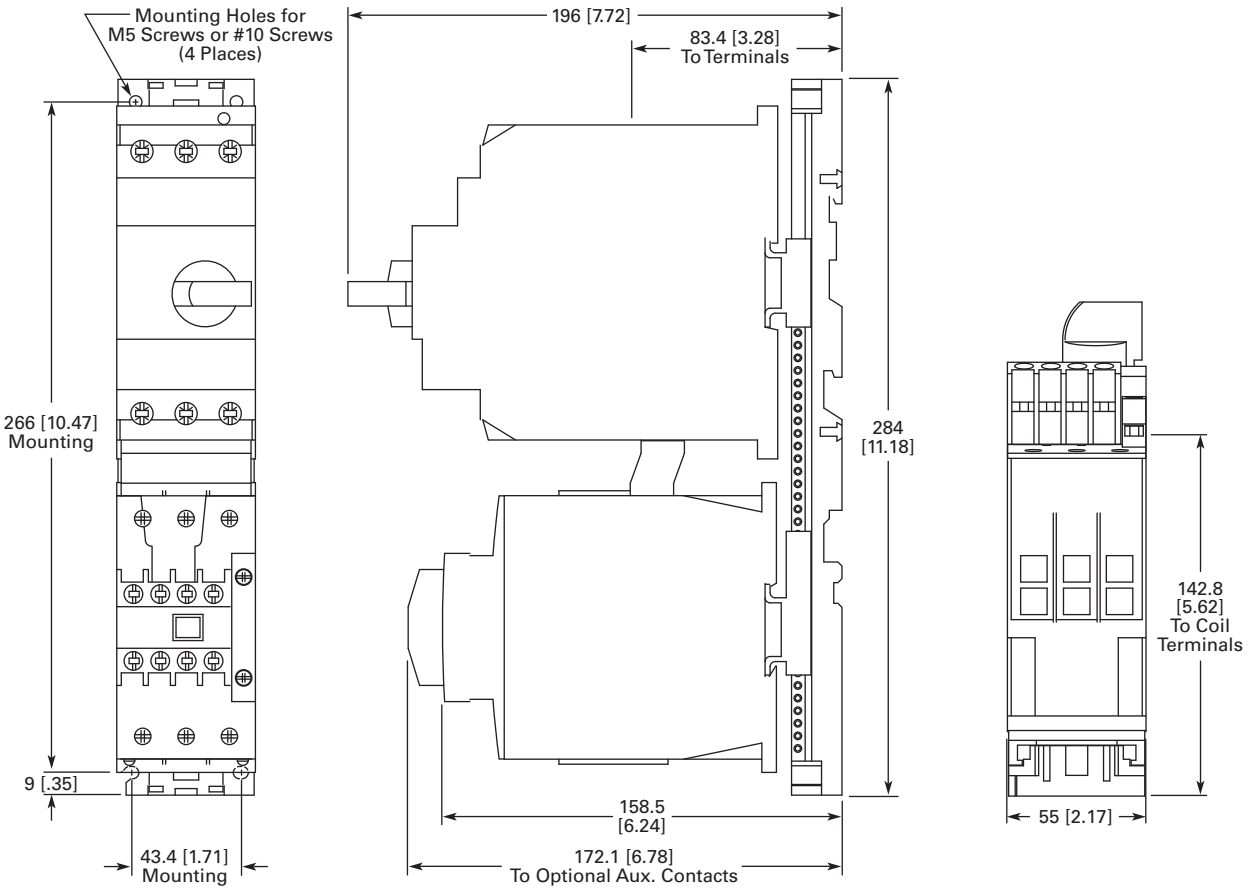


## XTFC...BB_

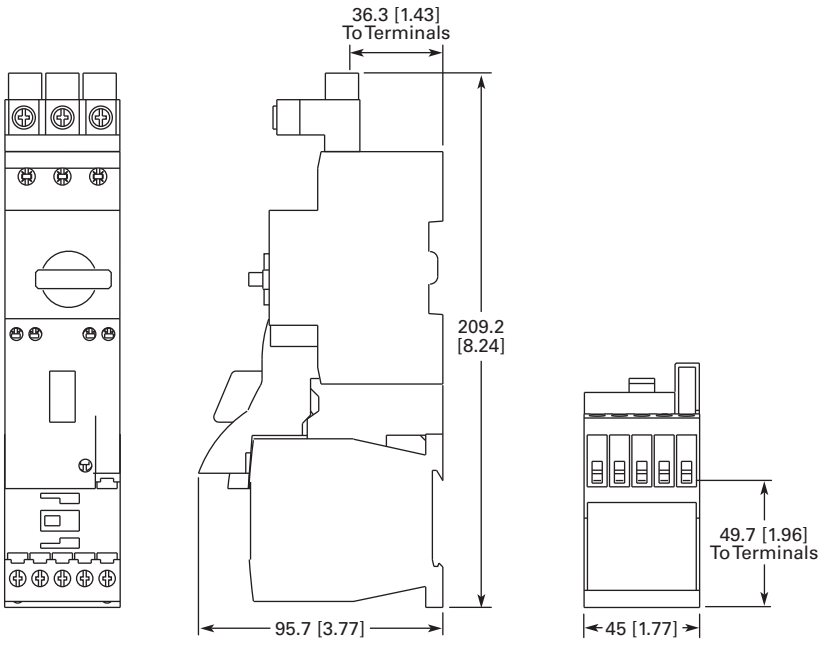

1

Approximate Dimensions in mm [in]

**XTFR...BB_**

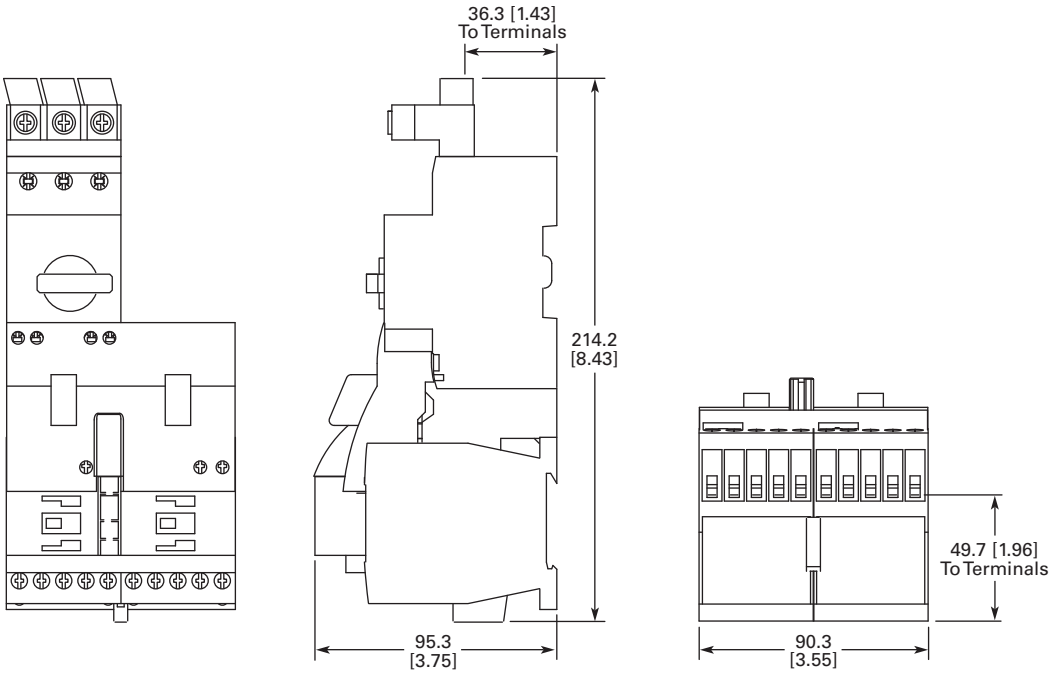


**XTFC...BC_**

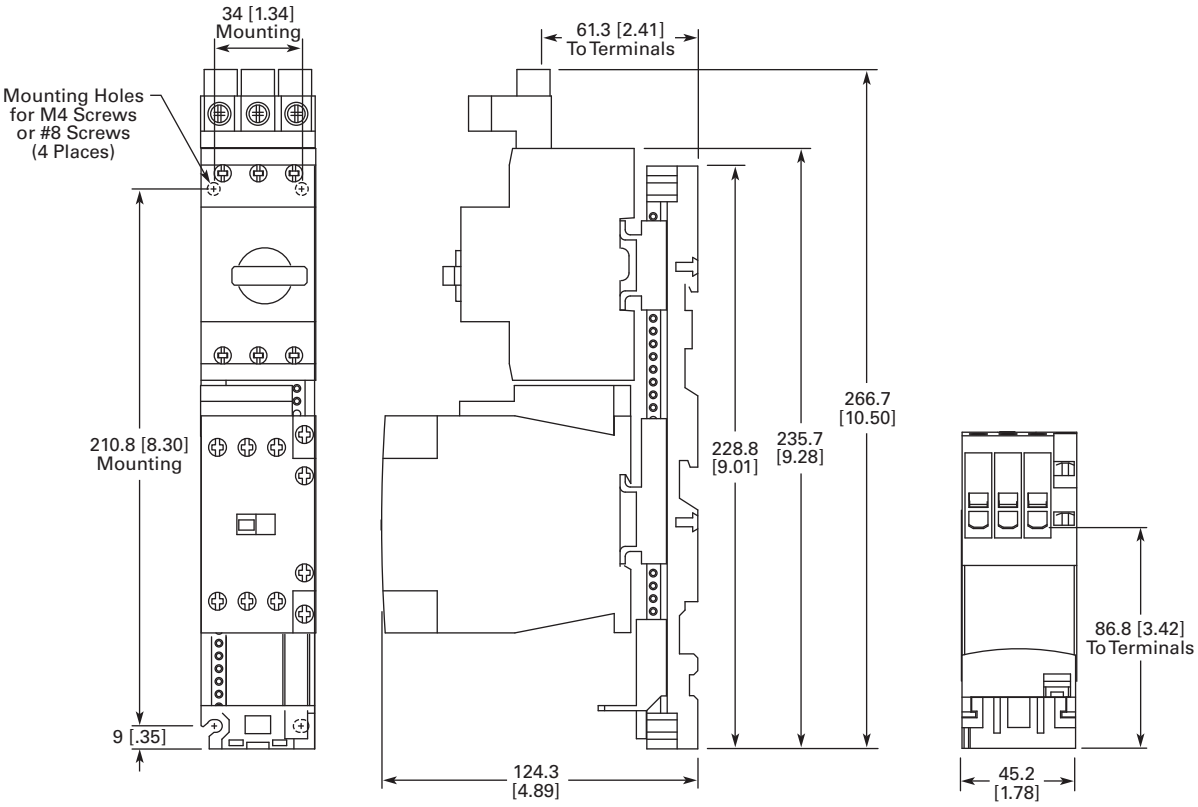

Approximate Dimensions in mm [in]

## XTFR...BC_

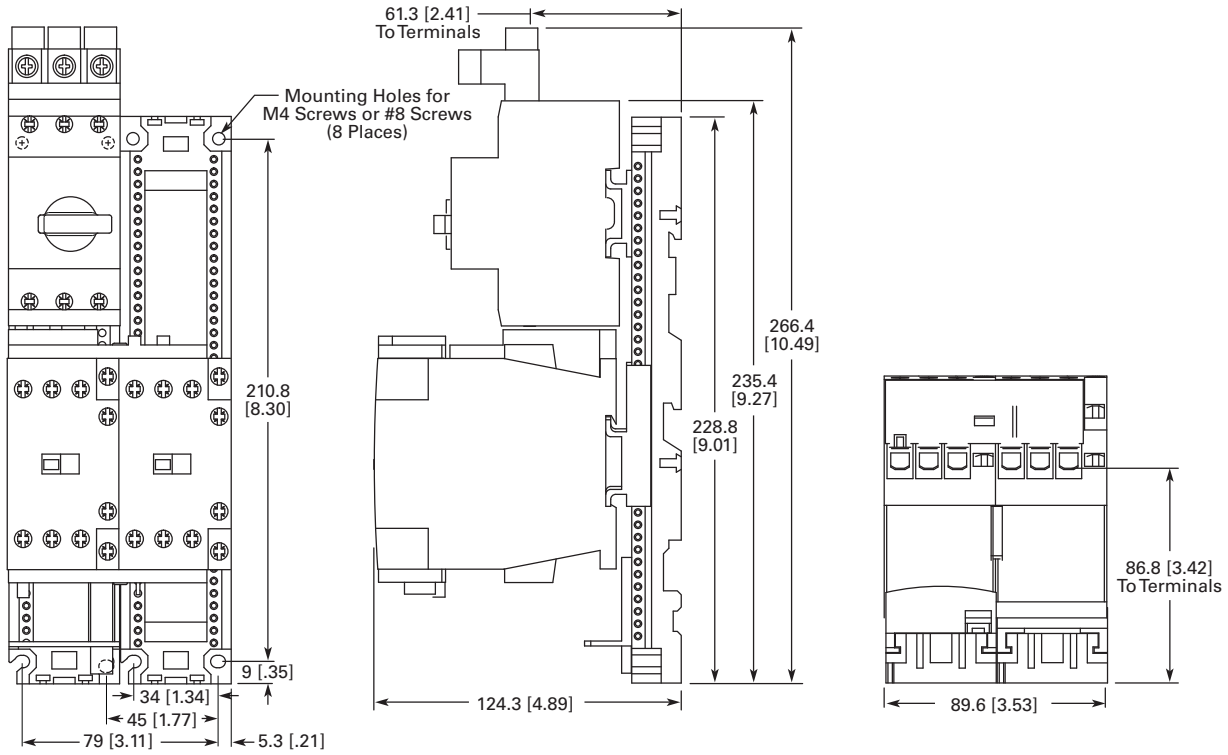


## XTFC...DD_

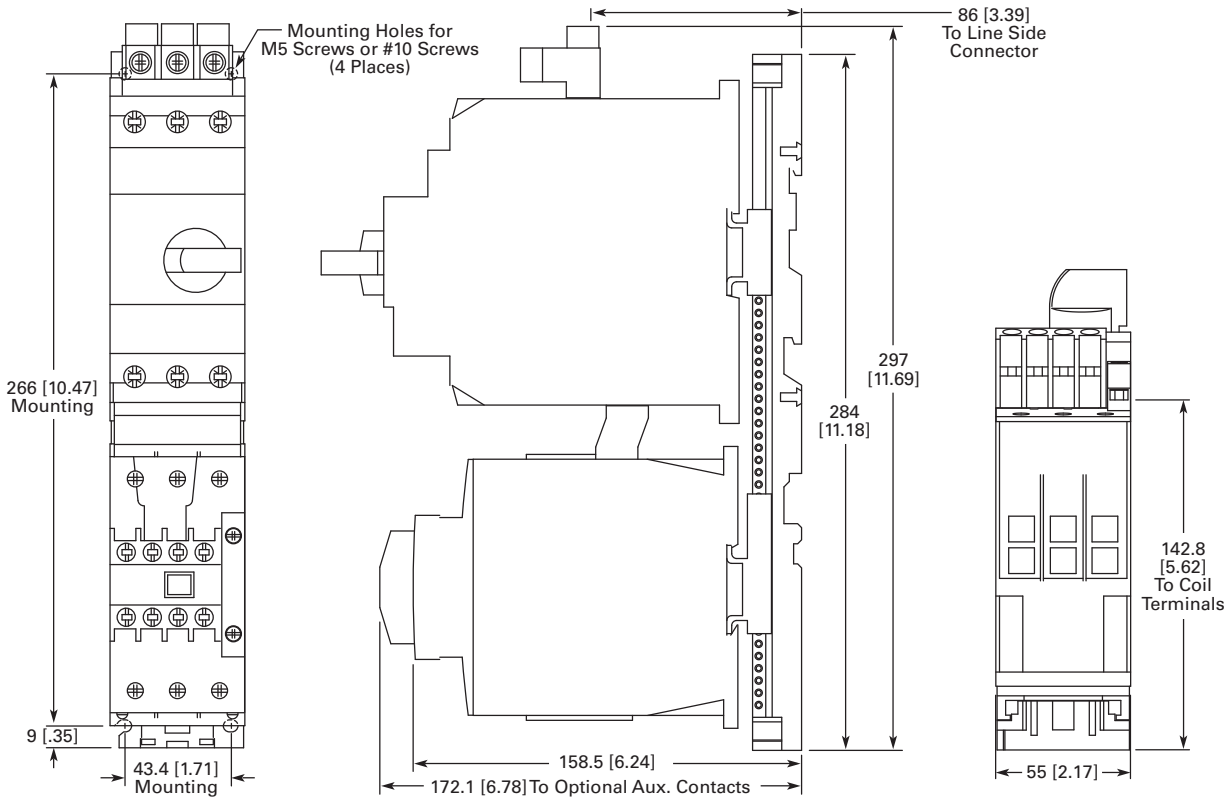

# RR Series Power Relays

**Key features:**

- SPDT through 3PDT, 10A contacts
- Midget power type relays
- Available in pin and blade terminal styles.
- Options include an indicator, check button for test operations and side flange.
- DIN rail, surface and panel mount sockets are available for a wide a variety of mounting applications.



## Part Number Selection

| Contact | Model | Part Number: Pin Terminal | Part Number: Blade Terminal* | Coil Voltage Code (Standard Stock Items in Bold) |
|---|---|---|---|---|
| SPDT  | Standard | — | RR1BA-U ☐ | AC6V, AC12V, AC24V, AC110V, **AC120V**, AC240V, DC6V, DC12V, **DC24V**, DC48V, DC110V |
| | With Indicator | | RR1BA-UL ☐ | |
| | With Check Button | | RR1BA-UC ☐ | |
| | With Indicator and Check Button | | RR1BA-ULC ☐ | |
| | Side Flange Model | | RR1BA-US ☐ | |
| DPDT  | Standard | RR2P-U ☐ | RR2BA-U ☐ | |
| | With Indicator | RR2P-UL ☐ | RR2BA-UL ☐ | |
| | With Check Button | RR2P-UC ☐ | RR2BA-UC ☐ | |
| | With Indicator and Check Button | RR2P-ULC ☐ | RR2BA-ULC ☐ | |
| | Side Flange Model | — | RR2BA-US ☐ | |
| 3PDT  | Standard | RR3PA-U ☐ | RR3B-U ☐ | |
| | With Indicator | RR3PA-UL ☐ | RR3B-UL ☐ | |
| | With Check Button | RR3PA-UC ☐ | RR3B-UC ☐ | |
| | With Indicator and Check Button | RR3PA-ULC ☐ | RR3B-ULC ☐ | |
| | Side Flange Model | — | RR3B-US ☐ | |

*Blade type not TUV tested or CE marked.
Side flange model mounts directly to panel with no socket required.

**Ordering Information**
When ordering, specify the Part No. and coil voltage code:
(example) **RR3B-U** **AC120V**
Part No. — Coil Voltage Code

## Sockets

| Relays | Standard DIN Rail Mount | Finger-safe DIN Rail Mount | Through Panel Mount |
|---|---|---|---|
| RR2P | SR2P-05<br>SR2P-06 | SR2P-05C | SR2P-51 |
| RR3PA | SR3P-05<br>SR3P-06 | SR3P-05C | SR3P-51 |
| RR1BA<br>RR2BA<br>RR3B | SR3B-05 | — | SR3B-51 |





All DIN rail mount sockets shown above can be mounted using DIN rail BNDN1000.

## Hold Down Springs & Clips

| Appearance | Description | Relay | For DIN Mount Socket | For Through Panel & PCB Mount Socket |
|---|---|---|---|---|
|  | Pullover Wire Spring | RR2P | SR2B-02F1 | SR3P-01F1 |
| | | RR3PA | SR3B-02F1 | |
| | | RR1BA, RR2BA, RR3B | SR3B-02F1 | SR3B-02F1 |
|  | Leaf Spring (side latch) | RR2P, RR3PA | SFA-203 | – |

## Accessories

| Item | Appearance | Use with | Part No. | Remarks |
|---|---|---|---|---|
| Aluminum DIN Rail (1 meter length) |  | All DIN rail sockets | BNDN1000 | The BNDN1000 is designed to accommodate DIN mount sockets. Made of durable extruded aluminum, the BNDN1000 measures 0.413 (10.5mm) in height and 1.37 (35mm) in width (DIN standard). Standard length is 39" (1,000mm). |
| DIN Rail End Stop |  | DIN rail | BNL5 | 9.1 mm wide. |
| Replacement Hold-Down Spring Anchor |  | Horseshoe clip for sockets SR3B-05, SR2P-06, SR3P-06 | Y778-011 | For use on DIN rail mount socket when using pullover wire hold down spring. 2 pieces included with each socket. |
| |  | Chair clip for sockets SR2P-05(C), SR3P-05(C) | Y703-102 | |

## Specifications

| | | | |
|---|---|---|---|
| Contact Material | | Silver | |
| Contact Resistance [1] | | 30 mΩ maximum | |
| Minimum Applicable Load | | 1V DC, 10 mA | |
| Operating Time [2] | | 25 ms maximum | |
| Release Time [2] | | 25 ms maximum | |
| Power Consumption (approx.) | | AC: 3 VA (50 Hz), 2.5 VA (60 Hz)<br>DC: 1.5W | |
| Insulation Resistance | | 100 MΩ minimum (500V DC megger) | |
| Dielectric Strength | Pin Terminal | Between live and dead parts: | 1500V AC, 1 minute |
| | | Between contact and coil: | 1500V AC, 1 minute |
| | | Between contacts of different poles: | 1500V AC, 1 minute |
| | | Between contacts of the same pole: | 1000V AC, 1 minute |
| | Blade Terminal | Between live and dead parts: | 2000V AC, 1 minute |
| | | Between contact and coil: | 2000V AC, 1 minute |
| | | Between contacts of different poles: | 2000V AC, 1 minute |
| | | Between contacts of the same pole: | 1000V AC, 1 minute |
| Operating Frequency | | Electrical: | 1800 operations/h maximum |
| | | Mechanical: | 18,000 operations/h maximum |
| Vibration Resistance | | Damage limits: | 10 to 55 Hz, amplitude 0.5 mm |
| | | Operating extremes: | 10 to 55 Hz, amplitude 0.5 mm |
| Shock Resistance | | Damage limits: | 1000 m/s$^2$ (100g) |
| | | Operating extremes: | 100 m/s$^2$ (10G) |
| Mechanical Life | | 10,000,000 operations | |
| Electrical Life | | 200,000 operations (220V AC, 5A) | |
| Operating Temperature [3] | | –25 to +40°C (no freezing) | |
| Operating Humidity | | 5 to 85% RH (no condensation) | |
| Weight (approx.) (Standard type) | | RR2P: 90g, RR3PA: 96g, RR1BA/RR2BA/RR3B: 82g | |

1. Measured using 5V DC, 1A voltage drop method
2. Measured at the rated voltage (at 20°C), excluding contact bouncing
3. For use under different temperature conditions, refer to Continuous Load Current vs. Operating Temperature Curve.

## Coil Ratings

| Rated Voltage (V) | | Rated Current (mA) ±15% (at 20°C) | | Coil Resistance (Ω) ±10% (at 20°C) | Operating Characteristics (values at 20°C) | | |
|---|---|---|---|---|---|---|---|
| | | 50 Hz | 60 Hz | | Maximum Continuous Applied Voltage | Pickup Voltage | Dropout Voltage |
| AC (50/60 Hz) | 6 | 490 | 420 | 4.9 | 110% | 80% maximum | 30% minimum |
| | 12 | 245 | 210 | 18 | | | |
| | 24 | 121 | 105 | 79 | | | |
| | 110 | 27 | 23 | 1,680 | | | |
| | 120 | 24 | 20.5 | 2,100 | | | |
| | 240 | 12.1 | 10.5 | 8,330 | | | |
| DC | 6 | 240 | | 25 | 110% | 80% maximum | 10% minimum |
| | 12 | 120 | | 100 | | | |
| | 24 | 60 | | 400 | | | |
| | 48 | 30 | | 1,600 | | | |
| | 110 | 13 | | 8,460 | | | |

## Contact Ratings

| Maximum Contact Capacity | | | | | |
|---|---|---|---|---|---|
| Continuous Current | Allowable Contact Power | | Rated Load | | |
| | Resistive Load | Inductive Load | Voltage (V) | Res. Load | Ind. Load |
| 10A | 1650VA AC 300W DC | 1100VA AC 150W DC | 110 AC | 10A | 7.5A |
| | | | 220 AC | 7.5A | 5A |
| | | | 30 DC | 10A | 5A |

Note: Inductive load for the rated load — cos ø = 0.3, L/R = 7 ms

## TÜV Ratings

| Voltage | |
|---|---|
| 240V AC | 10A |
| 30V DC | 10A |

AC: cos ø = 1.0, DC: L/R = 0 ms

## UL Ratings

| Voltage | Resistive | General use | Horse Power Rating |
|---|---|---|---|
| 240V AC | 10A | 7A | 1/3 HP |
| 120V AC | 10A | 7.5A | 1/4 HP |
| 30V DC | 10A | 7A | — |

## CSA Ratings

| Voltage | Resistive | General use |
|---|---|---|
| 240V AC | 10A | 7A |
| 120V AC | 10A | 7.5A |
| 100V DC | — | 0.5A |
| 30V DC | 10A | 7.5A |

## Socket Specifications

| | Relays | Terminal | Electrical Rating | Wire Size | Torque |
|---|---|---|---|---|---|
| DIN Rail Sockets | SR2P-05 | M3 screw with captive wire clamp | 300V, 10A | Maximum 2 - #12 AWG | 9 - 11.5in•lbs |
| | SR2P-05C | M3 screw with captive wire clamp, fingersafe | 300V, 10A | Maximum 2 - #12 AWG | 9 - 11.5in•lbs |
| | SR2P-06 | M3 screw with captive wire clamp | 300V, 10A | Maximum 2 - #12 AWG | 9 - 11.5in•lbs |
| | SR3P-05 | M3 screw with captive wire clamp | 300V, 10A | Maximum 2 - #12 AWG | 9 - 11.5in•lbs |
| | SR3P-05C | M3 screw with captive wire clamp, fingersafe | 300V, 10A | Maximum 2 - #12 AWG | 9 - 11.5in•lbs |
| | SR3P-06 | M3 screw with captive wire clamp | 300V, 10A | Maximum 2 - #12 AWG | 9 - 11.5in•lbs |
| | SR3B-05 | M3 screw with captive wire clamp | 300V, 15A (10A)* (*CSA rating) | Maximum 2 - #12 AWG | 9 - 11.5in•lbs |
| Through Panel Mount Sockets | SR2P-51 | Solder | 300V, 10A | — | — |
| | SR3P-51 | Solder | 300V, 10A | — | — |
| | SR3B-51 | Solder | 300V, 10A | — | — |

# Characteristics (Reference Data)

## Electrical Life Curves

AC Load

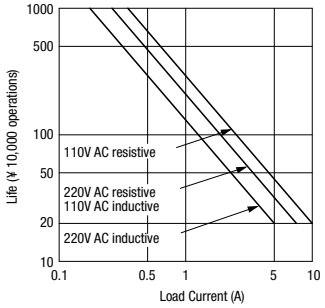


DC Load

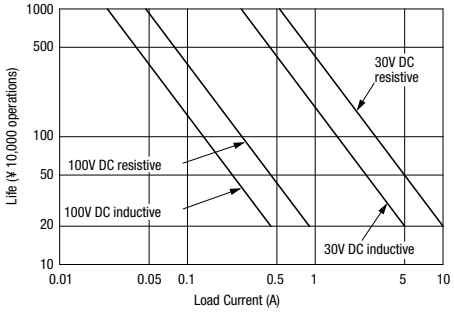


## Maximum Switching Capacity

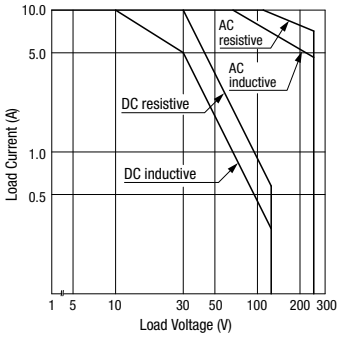


## Continuous Load Current vs. Operating Temperature Curve (Standard Type, With Check Button, and Side Flange Type)

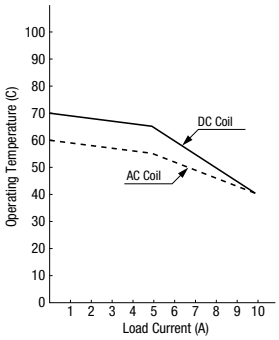


## Internal Connection (View from Bottom)

### Standard Type

RR2P-U | RR3PA-U | RR1BA-U | RR2BA-U | RR3B-U

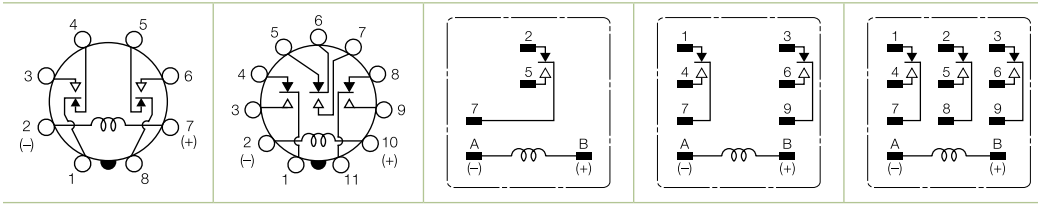


With Check Button

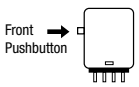


Contacts can be operated by pressing the check button.

### With Indicator (-UL type)

| | RR2P | RR3PA | RR1BA | RR2BA | RR3B |
|---|---|---|---|---|---|
| Coil Below 100V AC/DC | 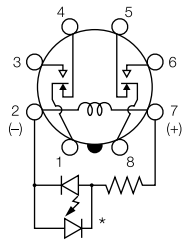 | 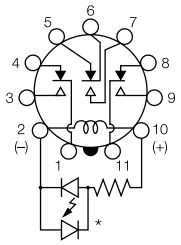 | 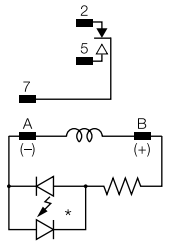 | 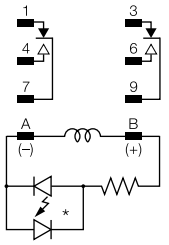 | 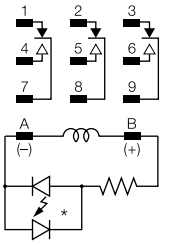 |
| Coil 100V AC/DC and over | 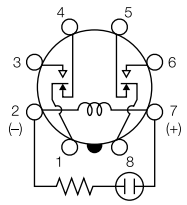 | 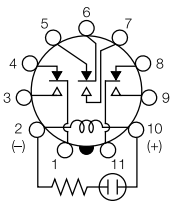 | 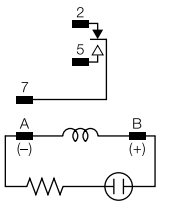 | 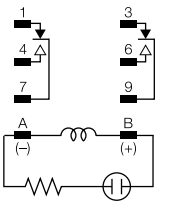 | 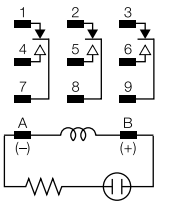 |

When the relay is energized, the indicator goes on.

- An LED protection diode is not contained in relay coils below 100V DC.
- Coils below 100V use LED indicator while coils above 100V use neon lamp indicator.

# Dimensions (mm)

## RR2P-U/RR2P-UL

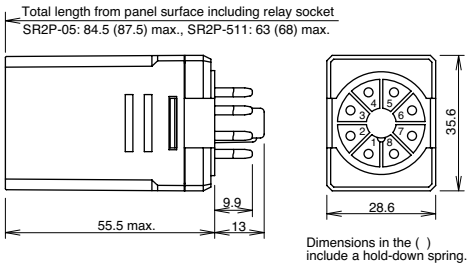


## RR3PA-U/RR3PA-UL

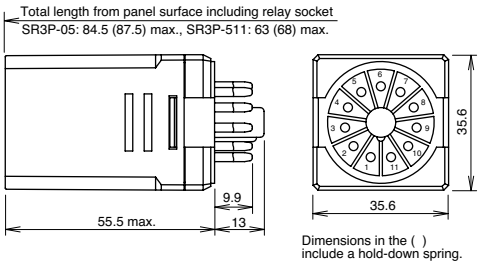


## RR1BA-U/RR2BA-UL/RR2BA-U
## RR2BA-UL/RR3B-U/RR3B-UL

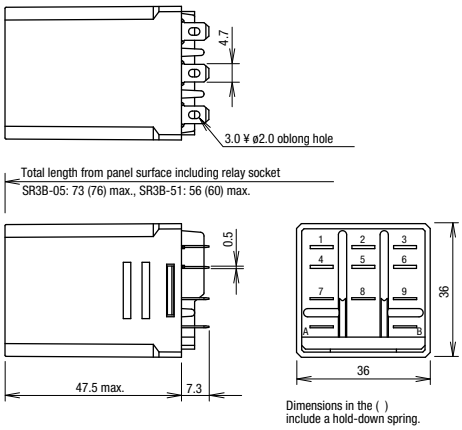


## RR1BA-US/RR2BA-US/RR3B-US

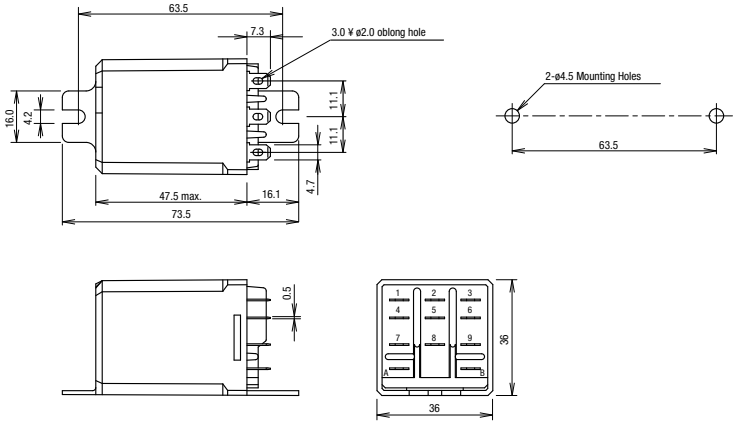


## Standard DIN Rail Mount Sockets

### SR2P-05

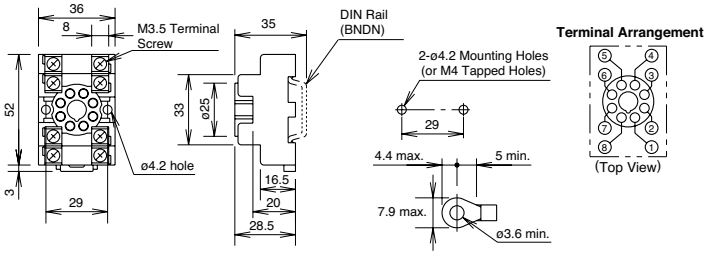


### SR2P-06

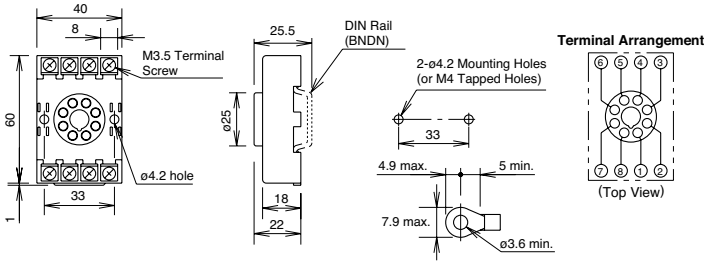


### SR3P-05

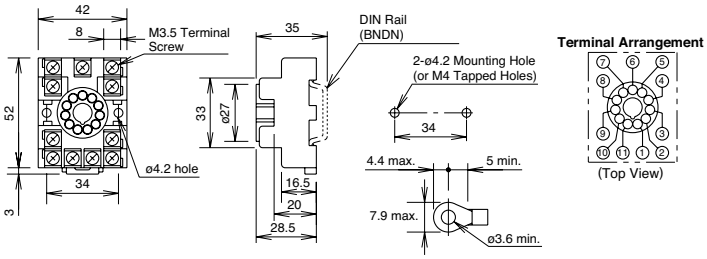


### SR3P-06

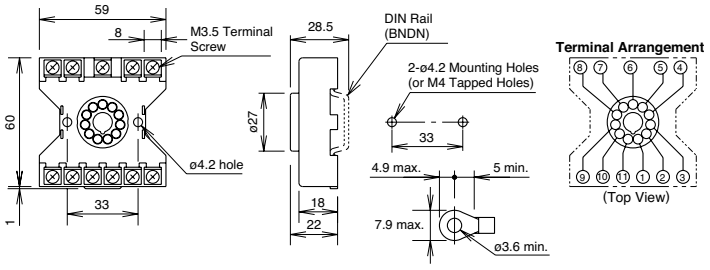

## Standard DIN Rail Mount Sockets

### SR3B-05

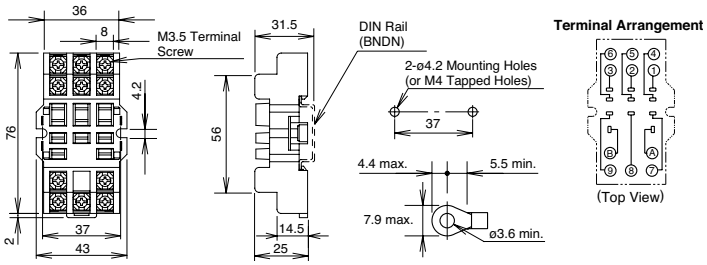


## Finger-safe DIN Rail Mount Sockets

### SR2P-05C

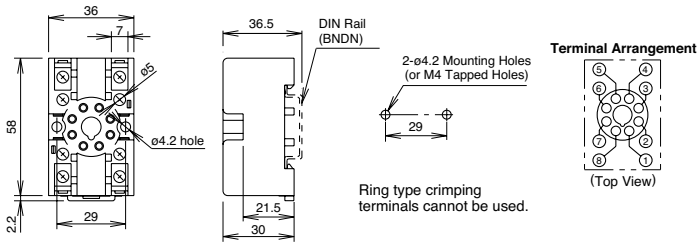


### SR3P-05C

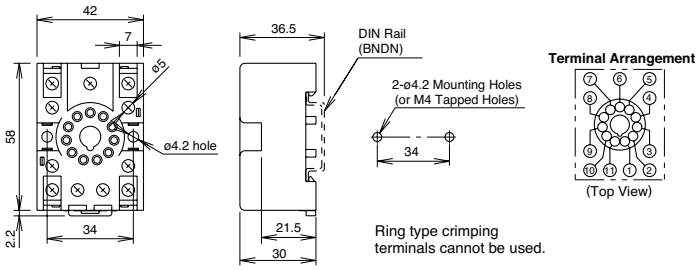


## Through Panel Mount Socket

### SR2P-51

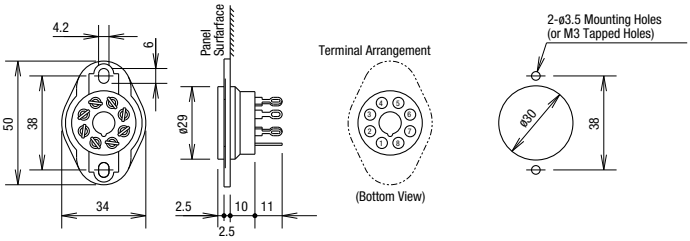


### SR3P-51

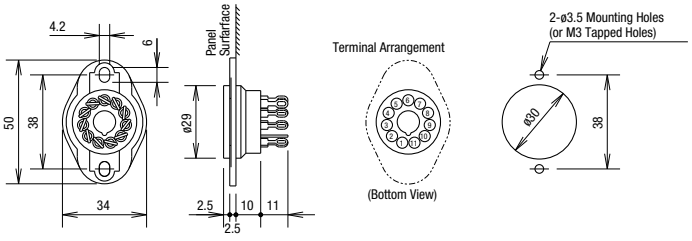


### SR3B-51

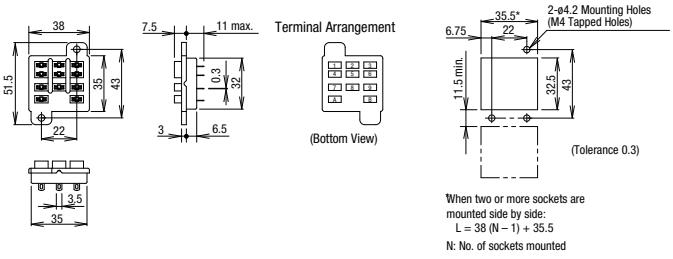

# Operating Instructions

## Driving Circuit for Relays

1. To ensure correct relay operation, apply rated voltage to the relay coil.

2. Input voltage for the DC coil:
   A complete DC voltage is best for the coil power to make sure of stable relay operation. When using a power supply containing a ripple voltage, suppress the ripple factor within 5%. When power is supplied through a rectification circuit, the relay operating characteristics, such as pickup voltage and dropout voltage, depend on the ripple factor. Connect a smoothing capacitor for better operating characteristics as shown below.

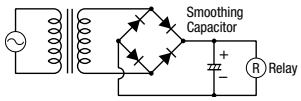


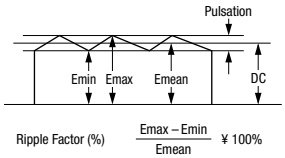


$$\text{Ripple Factor (\%)} = \frac{\text{Emax} - \text{Emin}}{\text{Emean}} \times 100\%$$

Emax = Maximum of pulsating current
Emin = Minimum of pulsating current
Emean = DC mean value

3. Leakage current while relay is off:
   When driving an element at the same time as the relay operation, special consideration is needed for the circuit design. As shown in the incorrect circuit below, leakage current (Io) flows through the relay coil while the relay is off. Leakage current causes coil release failure or adversely affects the vibration resistance and shock resistance. Design a circuit as shown in the correct example.

**Incorrect**

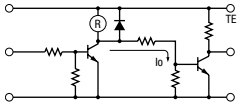


**Correct**

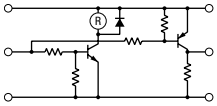


4. Surge suppression for transistor driving circuits:
   When the relay coil is turned off, a high-voltage pulse is generated, causing a transistor to deteriorate and sometimes to break. Be sure to connect a diode to suppress the back electromotive force. Then, the coil release time becomes slightly longer. To shorten the coil release time, connect a Zener diode between the collector and emitter of the transistor. Select a Zener diode with a Zener voltage slightly higher than the power voltage.

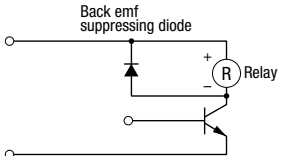


## Protection for Relay Contacts

1. The contact ratings show maximum values. Make sure that these values are not exceeded. When an inrush current flows through the load, the contact may become welded. If this is the case, connect a contact protection circuit, such as a current limiting resistor.

2. Contact protection circuit:
   When switching an inductive load, arcing causes carbides to form on the contacts, resulting in increased contact resistance. In consideration of contact reliability, contact life, and noise suppression, use of a surge absorbing circuit is recommended. Note that the release time of the load becomes slightly longer. Check the operation using the actual load. Incorrect use of a contact protection circuit will adversely affect switching characteristics. Four typical examples of contact protection circuits are shown in the following table:

| | | |
|---|---|---|
| RC | 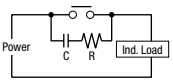 | This protection circuit can be used when the load impedance is smaller than the RC impedance in an AC load power circuit.<br>• R: Resistor of approximately the same resistance value as the load<br>• C:0.1 to 1 µF |
| | 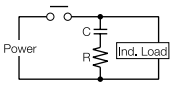 | This protection circuit can be used for both AC and DC load power circuits.<br>R: Resistor of approximately the same resistance value as the load<br>C: 0.1 to 1 µF |
| Diode | 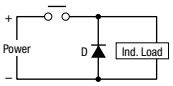 | This protection circuit can be used for DC load power circuits. Use a diode with the following ratings.<br>Reverse withstand voltage: Power voltage of the load circuit x 10<br>Forward current: More than the load current |
| Varistor | 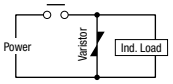 | This protection circuit can be used for both AC and DC load power circuits.<br>For a best result, when using a power voltage of 24 to 48V AC/DC, connect a varistor across the load.<br>When using a power voltage of 100 to 240V AC/DC, connect a varistor across the contacts. |

3. Do not use a contact protection circuit as shown below:

| | |
|---|---|
| 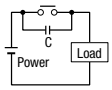 | This protection circuit is very effective in arc suppression when opening the contacts. But, the capacitor is charged while the contacts are opened. When the contacts are closed, the capacitor is discharged through the contacts, increasing the possibility of contact welding. |
| 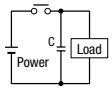 | This protection circuit is very effective in arc suppression when opening the contacts. But, when the contacts are closed, a current flows to charge the capacitor, causing contact welding. |

Generally, switching a DC inductive load is more difficult than switching a DC resistive load. Using an appropriate arc suppressor, however, will improve the switching characteristics of a DC inductive load.

## Soldering

1. When soldering the relay terminals, use a soldering iron of 30 to 60W, and quickly complete soldering (within approximately 3 seconds).

2. Use a non-corrosive rosin flux.

## Operating Instructions con't

### Other Precautions

1. General notice:
   To maintain the initial characteristics, do not drop or shock the relay.

   The relay cover cannot be removed from the base during normal operation. To maintain the initial characteristics, do not remove the relay cover.

   Use the relay in environments free from condensation, dust, sulfur dioxide ($SO_2$), and hydrogen sulfide ($H_2S$).

   Make sure that the coil voltage does not exceed applicable coil voltage range.

2. UL and CSA ratings may differ from product rated values determined by IDEC.

3. Do not use relays in the vicinity of strong magnetic field, as this may affect relay operation.

## Safety Precautions

- Turn off the power to the relay before starting installation, removal, wiring, maintenance, and inspection of the relays. Failure to turn power off may cause electrical shock or fire hazard.
- Observe specifications and rated values, otherwise electrical shock or fire hazard may be caused.
- Use wires of the proper size to meet voltage and current requirements. Tighten the terminal screws on the relay socket to the proper tightening torque.
- Surge absorbing elements on AC relays with RC or DC relays with diode are provided to absorb the back electromotive force generated by the coil. When the relay is subject to an excessive external surge voltage, the surge absorbing element may be damaged. Add another surge absorbing provision to the relay to prevent damage.

### Precautions for the RU Relays

- Before operating the latching lever of the RU relay, turn off the power to the RU relay. After checking the circuit, return the latching lever to the original position.
- Do not use the latching lever as a switch. The durability of the latching lever is a minimum of 100 operations.
- When using DC loads on 4PDT relays, apply a positive voltage to terminals of neighboring poles and a negative voltage to the other terminals of neighboring poles to prevent the possibility of short circuits.
- DC relays with a diode have a polarity in the coil terminals. Apply the DC voltage to the correct terminals.

# SECTION 11
# DATA LOGGER

US FURNACES, LLC MAX 4000

TruTrack



# Tc-HR Thermocouple Logger

The Tc-HR is a small Two Channel High Resolution (12 bit) Temperature Datalogger. The logger connects to an external Thermocouple probe and also has an internal thermister sensor. The logger accepts Type J,K,N,R and T thermocouple probes.

## Specification:

### Thermocouple Input:

**External Sensor Connector**

2 pin Switchcraft Plug (EN3C2M )
Weatherproof
IP66

**Pinout**

1 Positive
2 Negitive

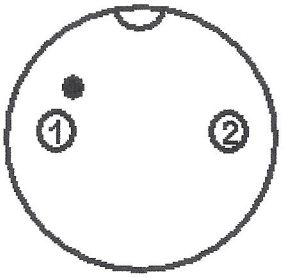


View from Front of Socket or Rear of Plug

**Accuracy**

±XX%

**Temperature Coefficient**

±0.1% per °C of logger Temperature

**Temperature Range**

| Type | Min Temp | | MaxTemp |
|---|---|---|---|
| J | -200°C | | 900°C |
| K | -250°C | | 1300°C |
| N | -250°C | | 1300°C |
| R | -50°C | | 1760°C |
| T | -250°C | | 400°C |

**Resolution**

| Type | Min Temp | at 0°C | Max Temp |
|---|---|---|---|
| J | ±0.32°C | ±0.15°C | ±0.13°C |
| K | ±2°C | ±0.2°C | ±0.23°C |
| N | ±2°C | ±0.3°C | ±0.21°C |
| R | ±1.5°C | ±1.4°C | ±0.6°C |
| T | ±1.5°C | ±0.2°C | ±0.13°C |

### Internal Temperature:

| | |
|---|---|
| **Sensor Type** | Thermister |
| **Linear accuracy over range** | ±0.3°C (0°C to 70°C) |
| **Repeatability** | ±0.1°C |
| **Long term stability** | ±0.1°C |
| Logger: | |
| **Working Temperature** | -30°C to +70°C |
| **Storage Temperature** | -30°C to +70°C |
| **Sampling Rate** | 1 second minimum<br>10 hours maxium<br>in 1 second intervals |
| **Storage capacity** | 64,000 8 bit samples<br>32,000 12bit samples |
| **Alarms** | Two independent Alarms<br>Triggered on any combination of six user configurable Alarm Conditions<br>One alarm can be configured to dial a PocketPager<br>Alarms can be visually checked using the Omnilog Software |
| **Start modes** | Start immediately<br>Start on date/time. |
| **Stop modes** | Stop when memory is full<br>Stop on date/time<br>Loop around (continues logging) |
| **Logging Modes** | Each channel can be set to log any combination of:<br>• Point readings<br>• Average reading<br>• Maximum reading<br>• Minimum reading |
| **Battery** | Factory Replaceable<br>One ½AA 3.6V lithium cell<br>Five year life.<br>The data is retained in the case of battery failure.<br>Battery Status Monitor in OmniLog Software |
| **Download Time** | 35 seconds for Full Logger |
| **Case material** | 304 Stainless tube |
| **Screw on end cap** | Plated brass |
| **Weight** | 110g |
| **Size** | 20mm diameter X 168mm long |

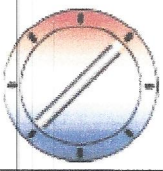

TruTrack

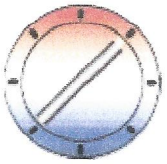



# OmniLog Data Management Program

## Overview

The OmniLog Data Management software is an application for reading, displaying, analyzing, organizing and exporting data that has been downloaded from data loggers.

It includes all the features of the original Data Logger Control Program with many additional Data Management Features.

Data can be read from data loggers or retrieved from previously saved data files. A connected datalogger can be configured,calibrated, started, read and stopped by this application.

Data retrieved from data loggers or weather stations and previously saved data files can be viewed and printed in a values spread sheet list, as a graph or as a statistics report. These values, graphs and statistics can be displayed and printed for all data or from a user selected block of data.

Periodic reports in Hourly, Daily, Weekly and Monthly intervals can be viewed and printed. Datasets from different loggers can be combined and the full range of viewing and printing options are available for these combined datasets.

Data can also be exported in a large range of industry standard formats including Microsoft Excel, Lotus 123,Lotus Symphony, DIF, Microsoft Multiplan, Symbolic Link Format, CSV, HTML and Space delimited Text Format.

The OmniLog software can be download from this web site. It is also available on CD ROM (for a Freight and Handling Fee) from your Logger Agent or Distributor.

Omnilog Download

Plugin Reports for the Omnilog software are also available

Omnilog Flow Totals Report

# OMNI

# DATA MANAGEMENT™ DOWNLOAD MANUAL

**Recycling Services International, LLC.**

**STEP 1:**
Attach the Logger
Open ***Omnilog Data Management*** icon (World for an Icon)

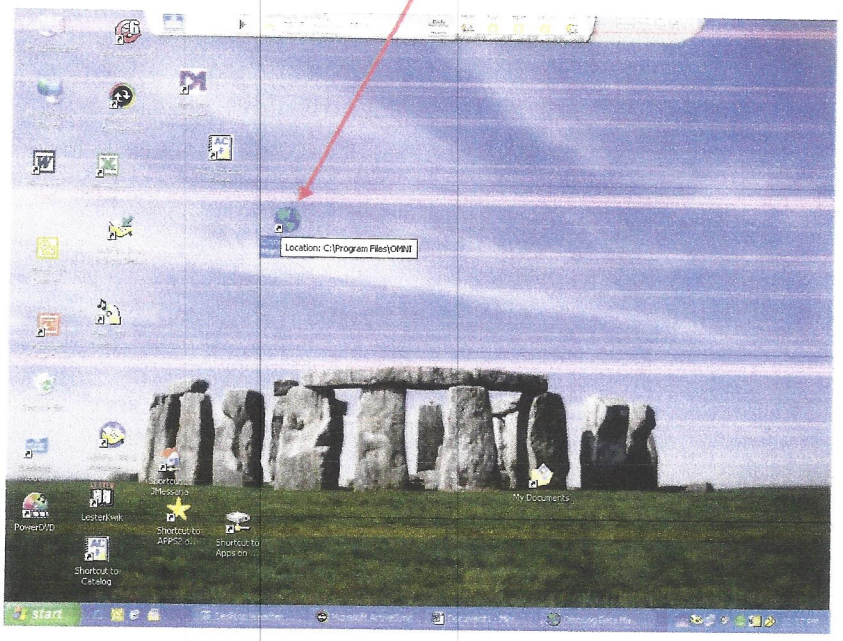


**Step 2:**
Click on the ***Download*** tab to get the below view

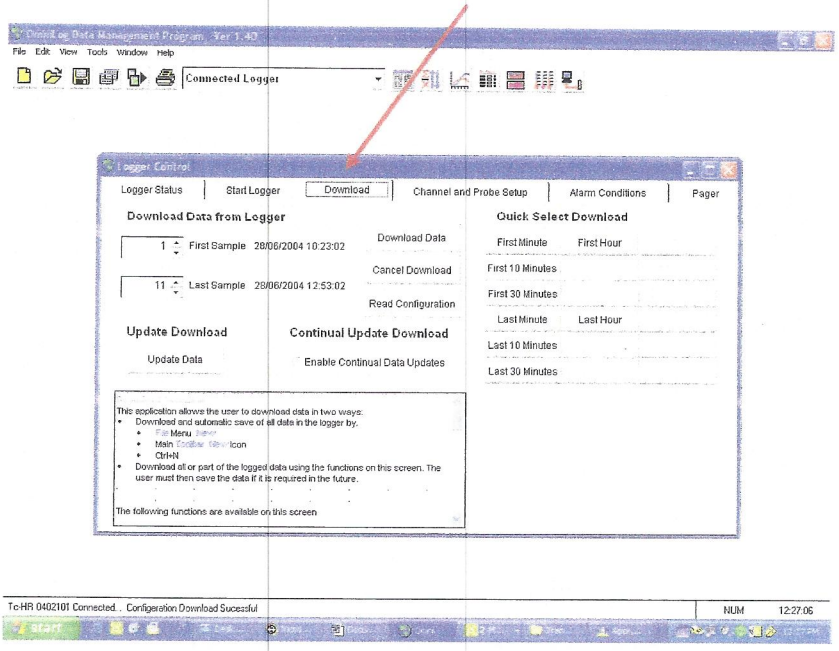

**Step 3:**
Click on the ***Download Data*** Tab:

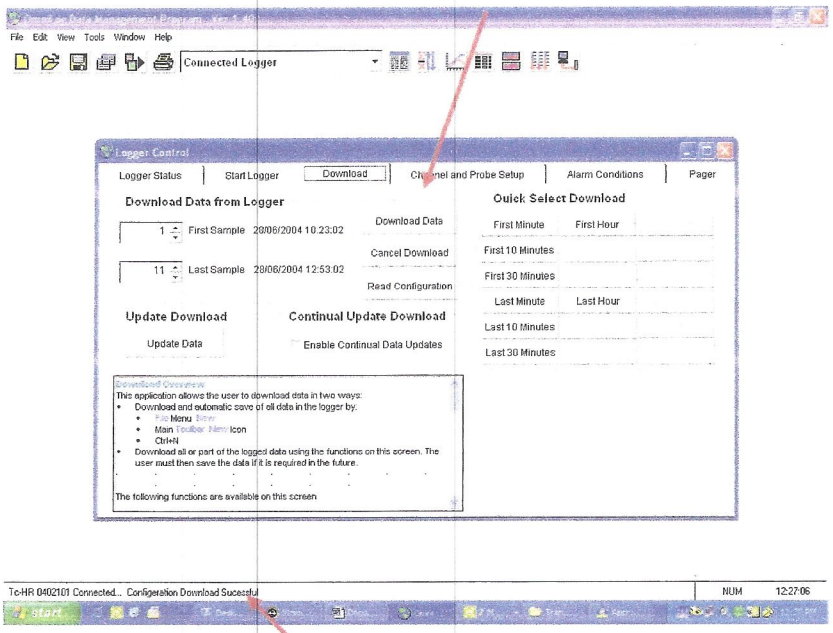


Look here, it should read "***finished process***"

**Step 4:**
Click on the this icon to view the ***data chart***:

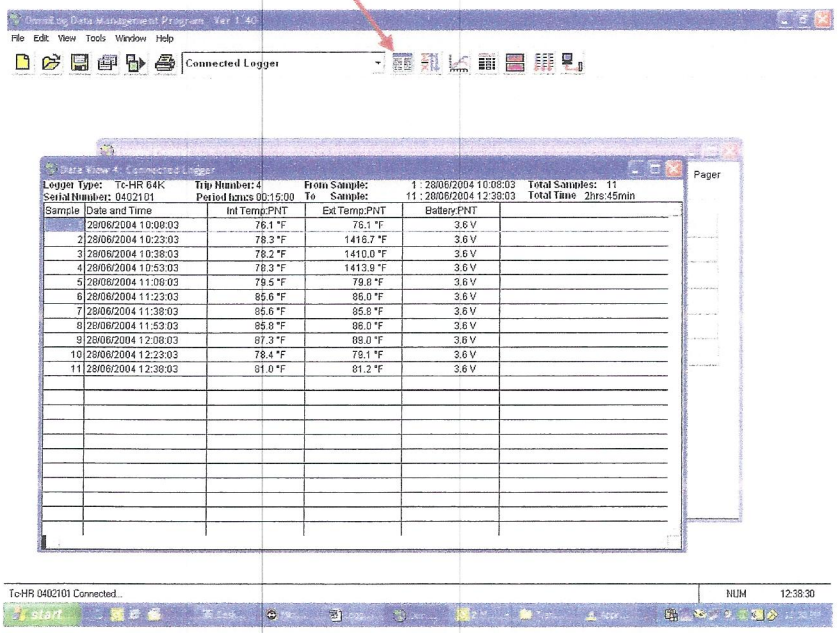

**Step 5:**

(You may want to create a file to save this info in a specific location. Example: In My documents create a folder called Data Log Charts.

Click the File…click on "save as" and save the file as a .log in the folder of your choice. )

Your Current Folder Name_____

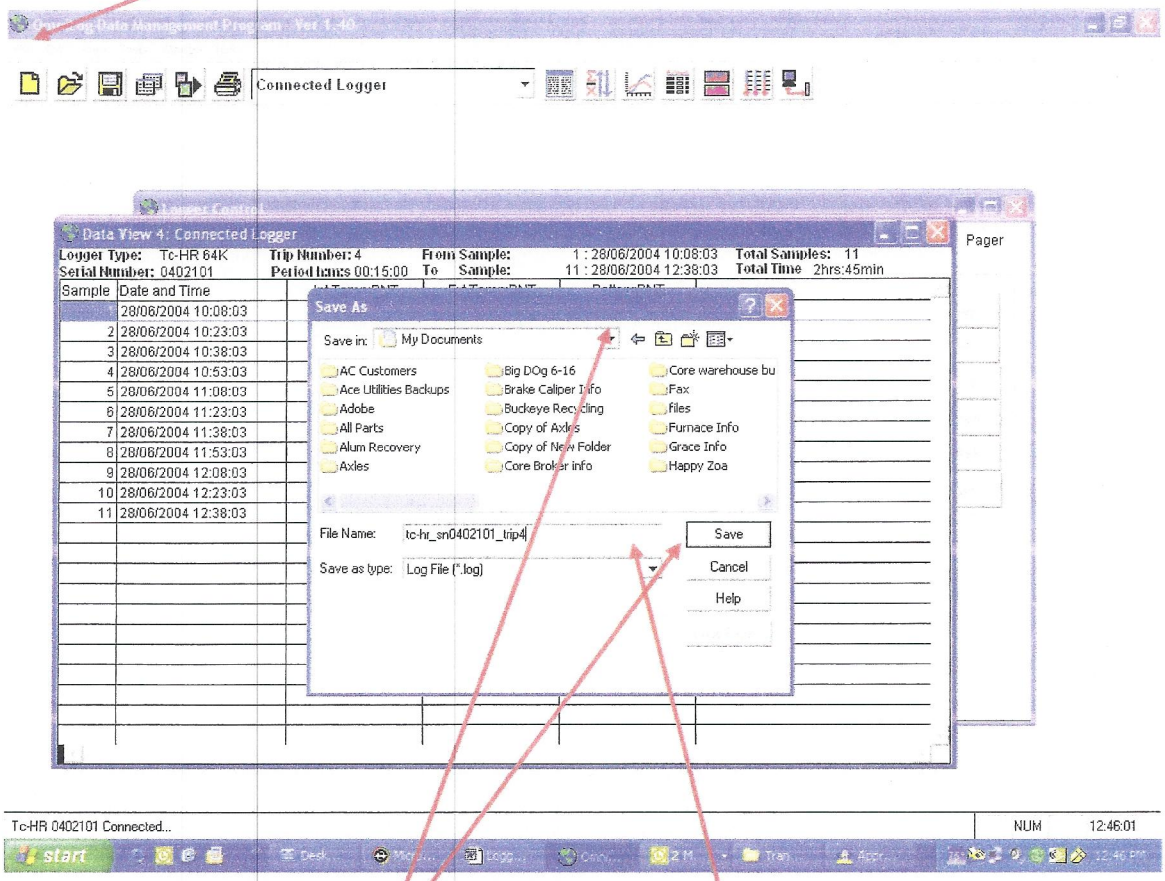


A) Chose the folder to save chart

B) Change the name :
Use the start and stop time (6-20 thru 25-04)

C) Press save to save chart.

# Go back to that location and make sure the chart has been saved as a *Text Document.*

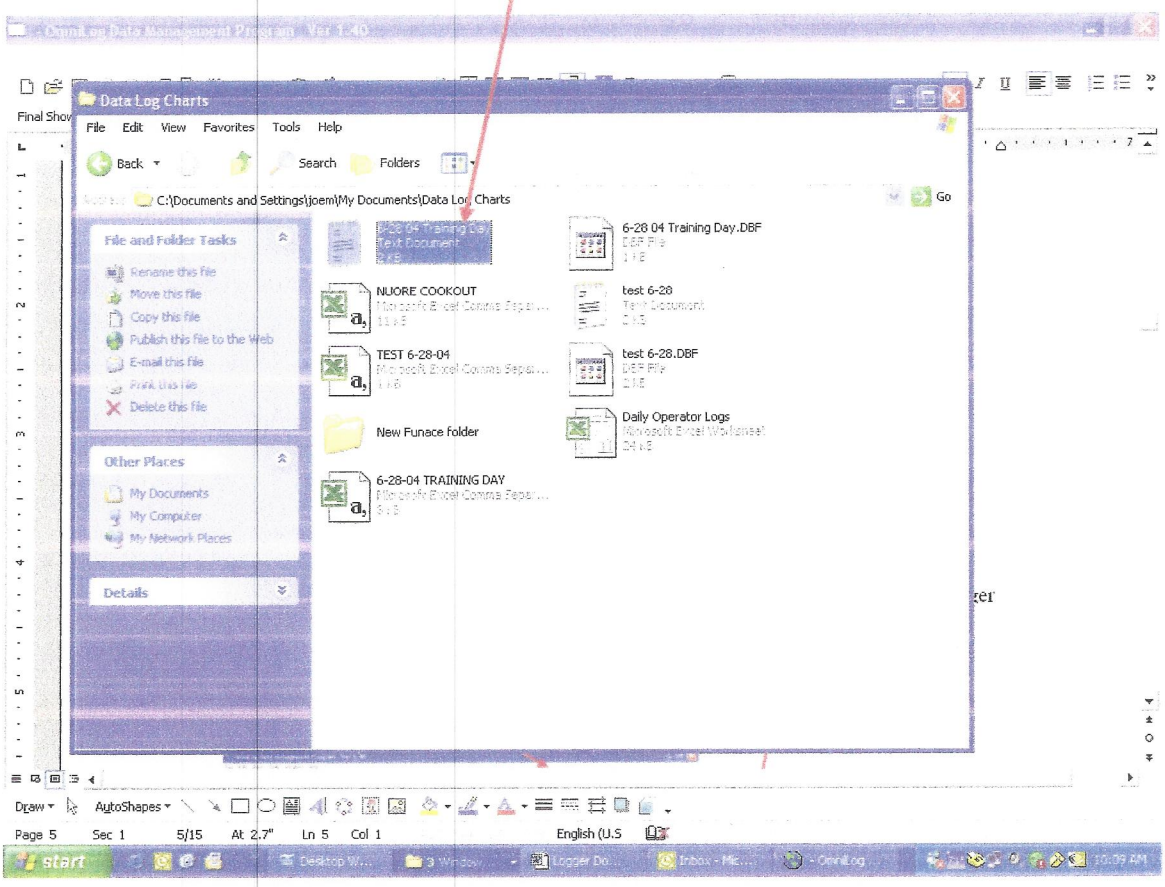

**Step 6:**

If you get this screen, click on this Icon (last one on right) to restore the download logger screen. To get this screen:

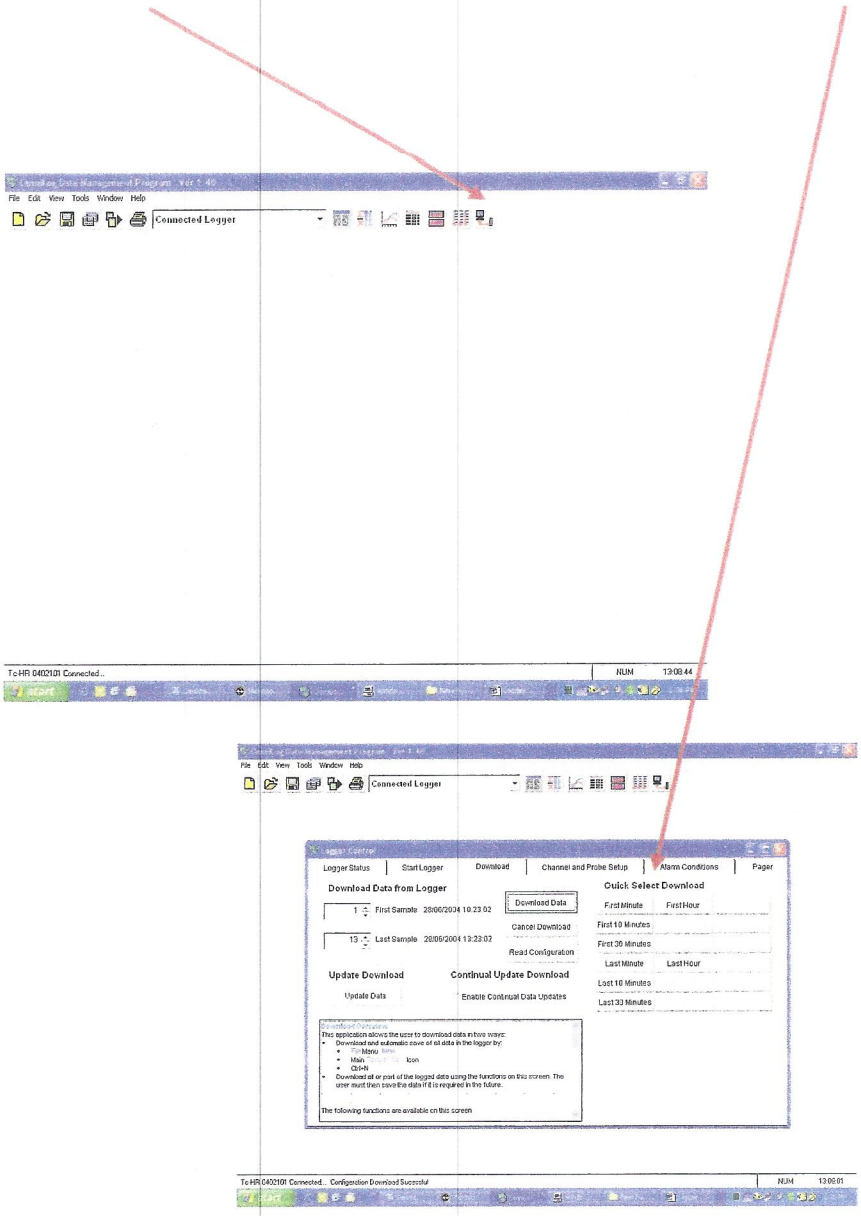

*WARNING!!!!!!!!!!!!!!*

**THIS STEP IS CRITICAL…STOPPING THE LOGGER WILL PUT THE LOGGER INTO A "WRITE OVER MODE".**

**ONCE YOU PRESS "START LOGGER" after you pressed "Stop LOGGER" you will overwrite the data in the logger.**

**Step 7: REREAD THE ABOVE WARNING…**
Click on ***Start Logger*** tab….check Battery life

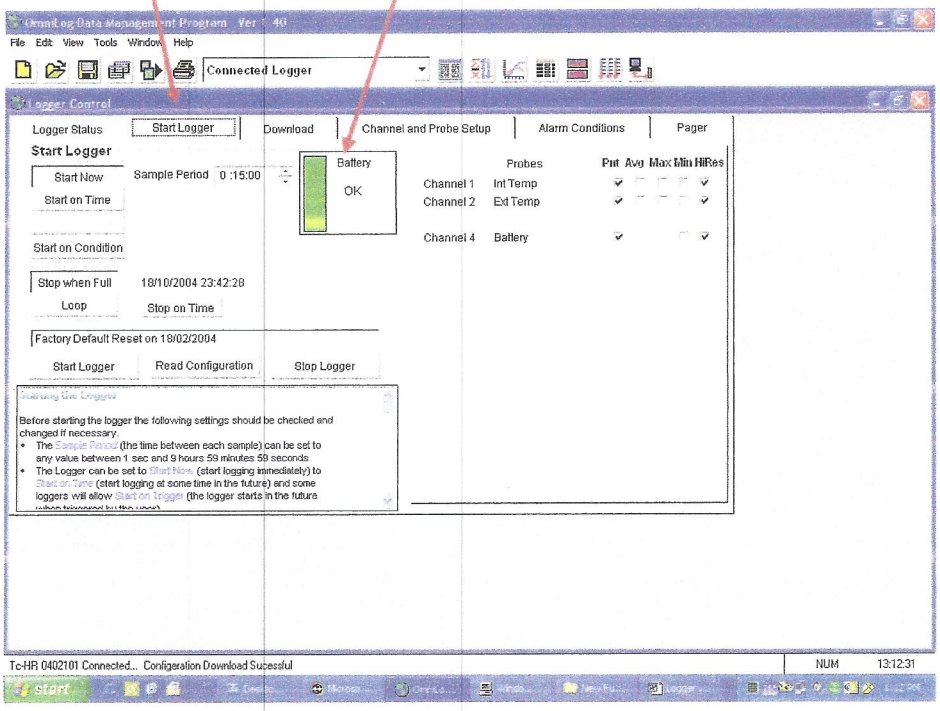

**Step 8: In the "Start Logger" Tab**

Click on the Stop Logger and look at bottom left for the words "Logger stopped"

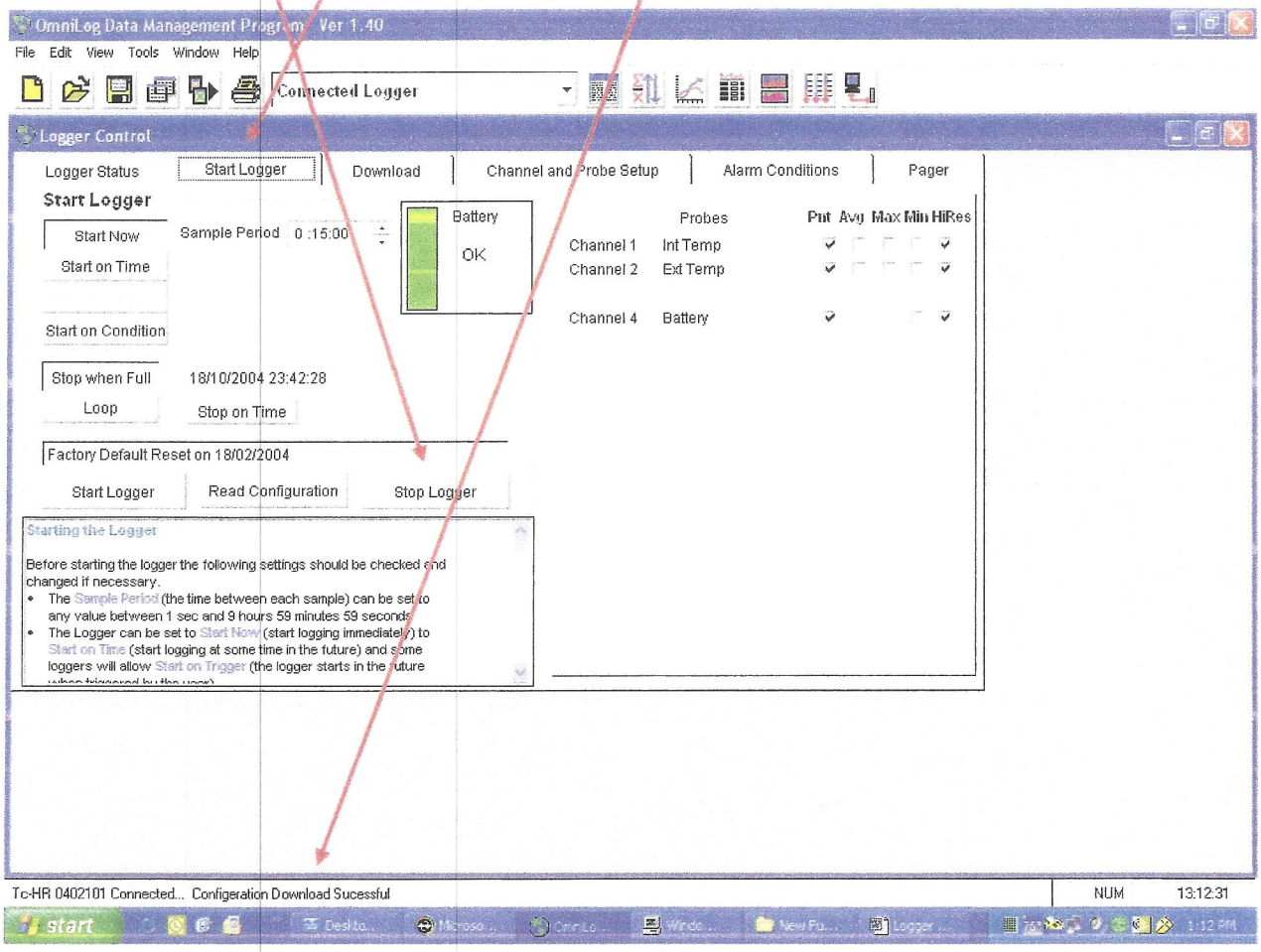

**Step 9:**
After you are confirmed that the logger has been stopped Click the "Start Logger button and CONFRIM on the bottom of the page that the logger has been started.

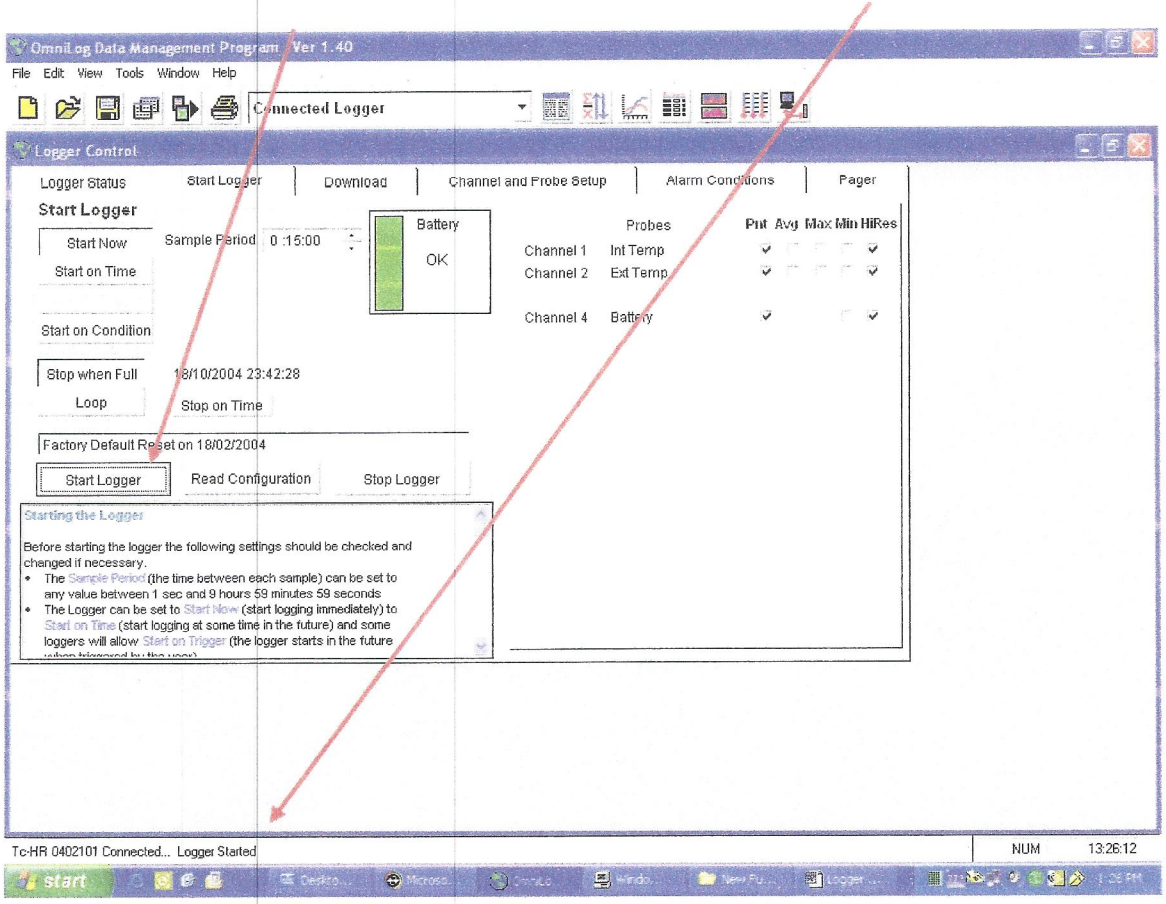

**Step 10: Logger Status tab:**
For your Info: "***Total Sample***" counts how many 15 min. intervals have been recorded.

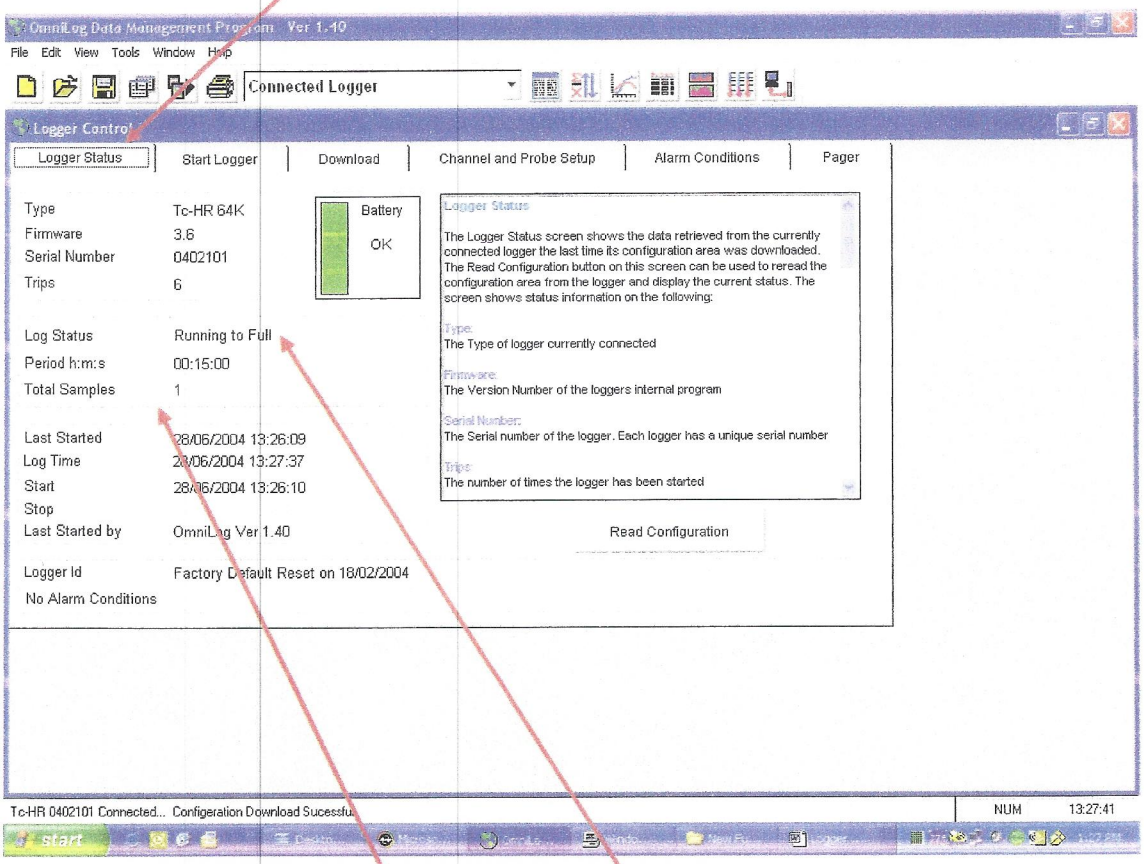


Logger status should always read "***Running to Full***".

**You are ready to attach logger for readings.**

***Total Samples*** should now read…1

**Stop at this point. You should check with your administrator for directions on whether you should continue.**

**Steps to EXPORT text file as follows.**

**If you are going to export the txt file after the program has been close out after the previous 10 step:**

**STEP 1:**
Open ***Omnilog Data Management*** icon (World for an Icon)

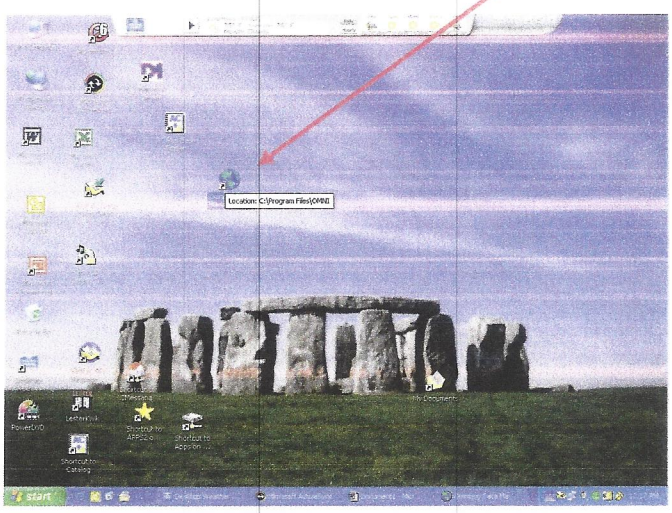

Your screen will look like the following:

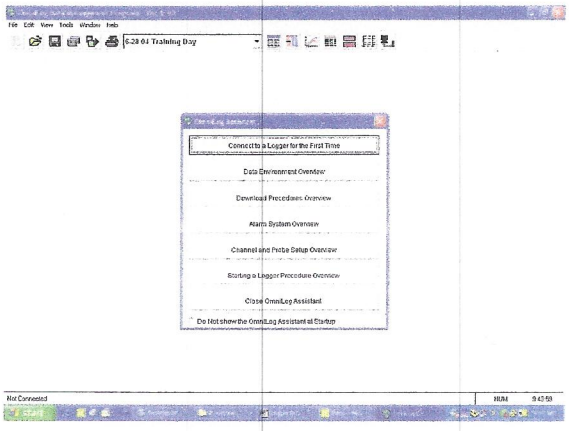

**Step 2:** Click on ***"File"*** and ***"open"*** and chose the folder that the data chart was saved. Highlight the txt file and then click on open.

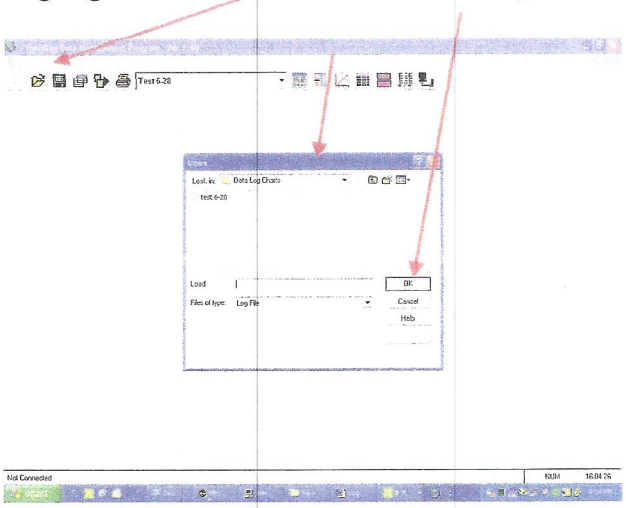


**Step 3:** Now click on the chart icon to view the data. (1st icon on right)

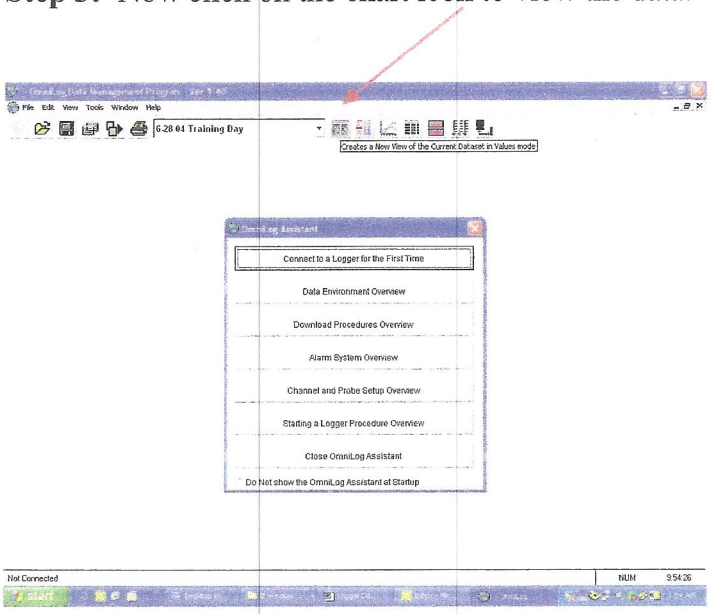


This screen will be displayed:

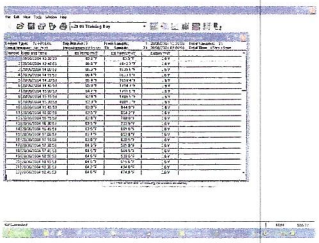

**Step 4:** Click on ***"file"*** and then ***"export"***.

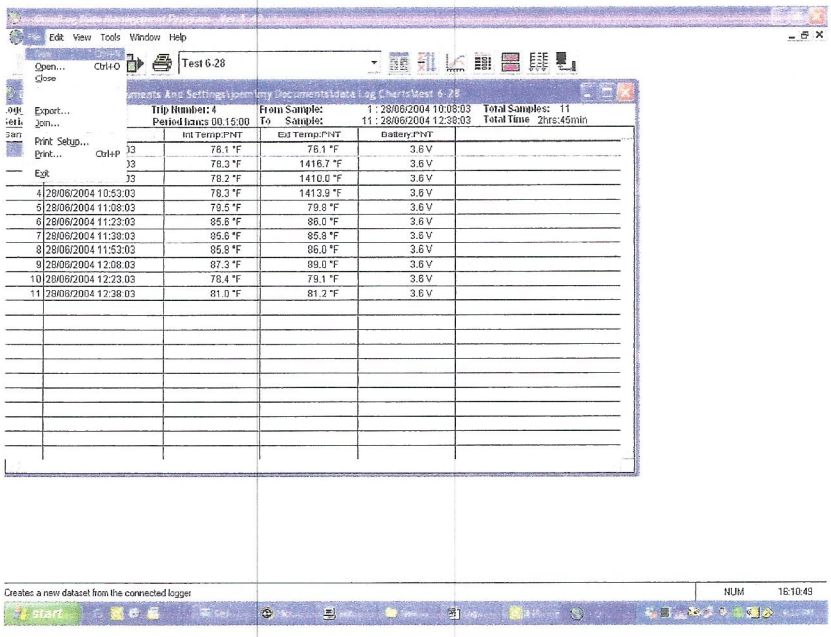


**Step 5:** This screen will be displayed. Click on ***"Export in Comma delimited Text Format (csv)".***

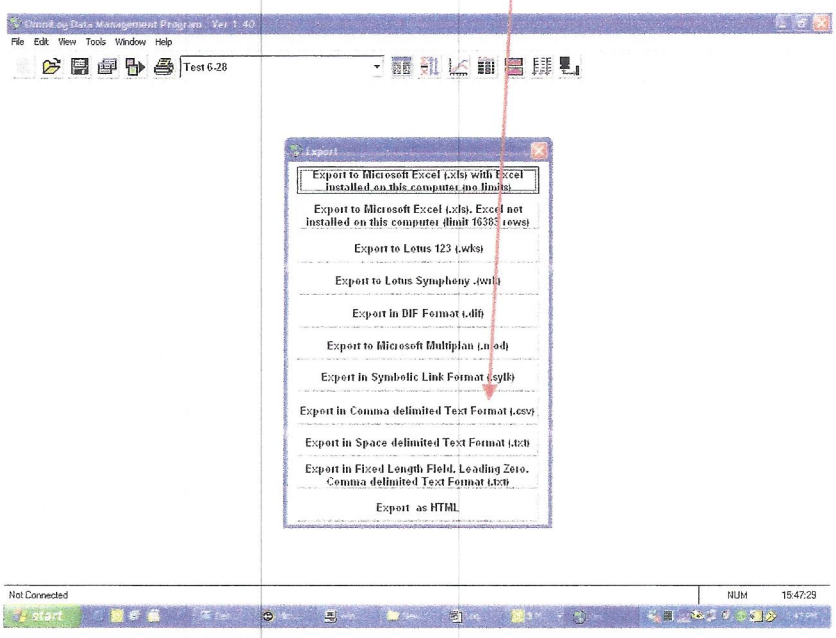

**Step 6:** Chose the folder that you need to save the .csv file in. Do not forget to name it you run date (6-20 thru 25-04). Click on ***"save"***

**Folder Name** **Name of exported file:** (6-20 thru 25-04).

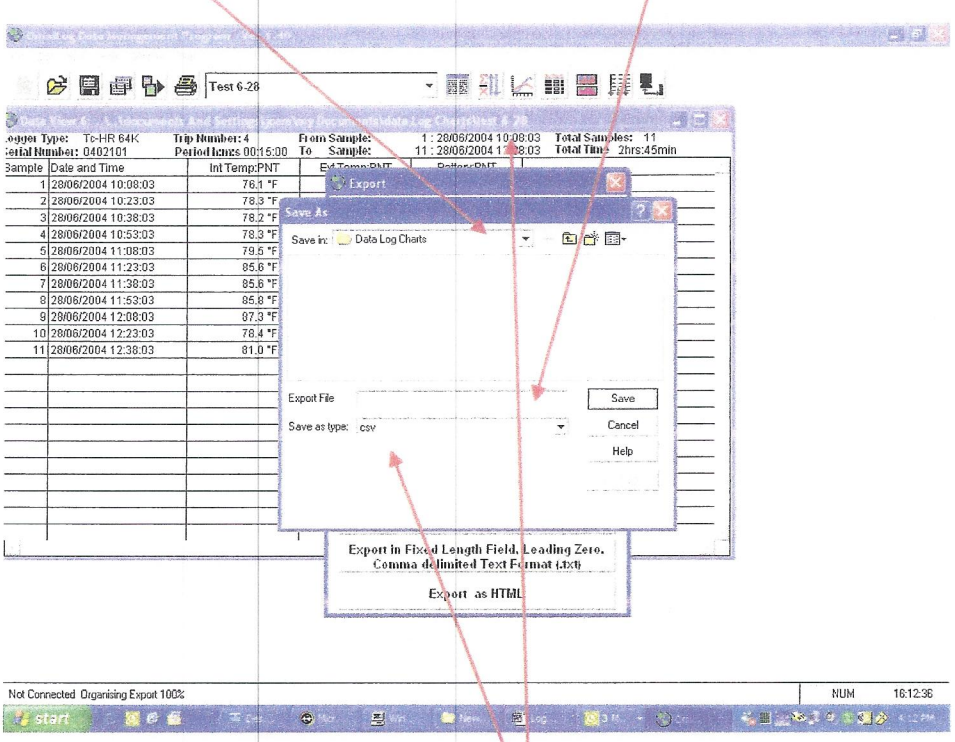


Make sure you save the file as a ***"csv"*** file.

Your Folder Name _____

Note: You can copy the name of the ***"txt"*** file that is being exported and past it in the ***"Export File"*** window.
This will keep the files consistent.

**Step 6:**
**Go to the folder to make sure the file has been saved:**

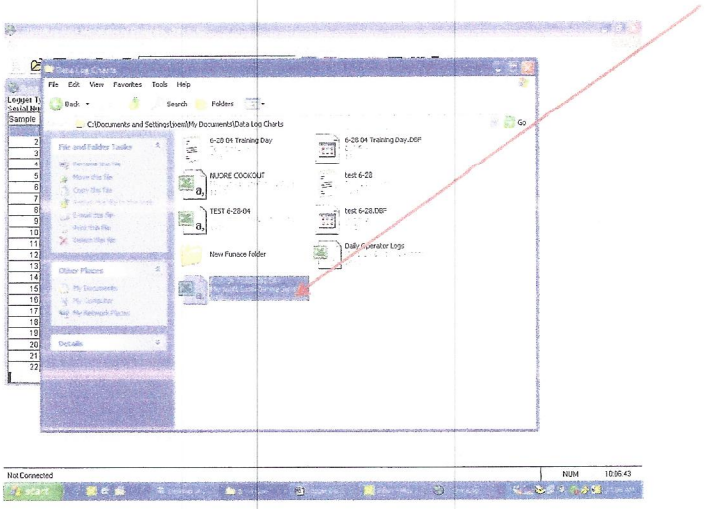

**Step 7:**
Open the ***"csv"*** file by double clicking to get this screen:

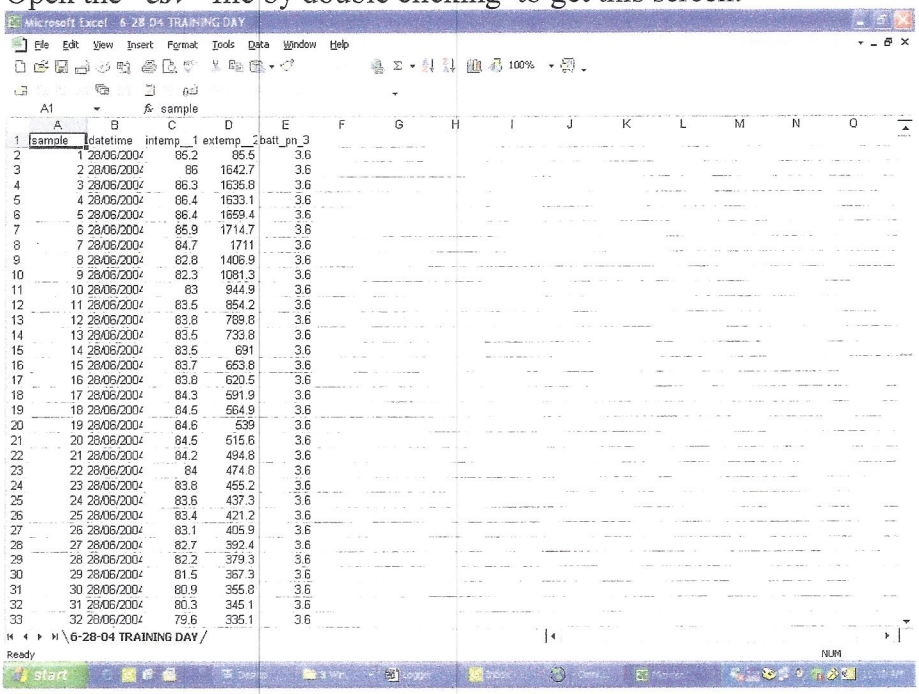

Microsoft Excel - 6-28-04 TRAINING DAY

File Edit View Insert Format Tools Data Window Help

A1 sample

| | A | B | C | D | E |
|---|---|---|---|---|---|
| 1 | sample | datetime | intemp__1 | extemp__2 | batt_pn_3 |
| 2 | 1 | 28/06/2004 | 85.2 | 85.5 | 3.6 |
| 3 | 2 | 28/06/2004 | 86 | 1642.7 | 3.6 |
| 4 | 3 | 28/06/2004 | 86.3 | 1635.8 | 3.6 |
| 5 | 4 | 28/06/2004 | 86.4 | 1633.1 | 3.6 |
| 6 | 5 | 28/06/2004 | 86.4 | 1659.4 | 3.6 |
| 7 | 6 | 28/06/2004 | 85.9 | 1714.7 | 3.6 |
| 8 | 7 | 28/06/2004 | 84.7 | 1711 | 3.6 |
| 9 | 8 | 28/06/2004 | 82.8 | 1406.9 | 3.6 |
| 10 | 9 | 28/06/2004 | 82.3 | 1081.3 | 3.6 |
| 11 | 10 | 28/06/2004 | 83 | 944.9 | 3.6 |
| 12 | 11 | 28/06/2004 | 83.5 | 854.2 | 3.6 |
| 13 | 12 | 28/06/2004 | 83.8 | 789.8 | 3.6 |
| 14 | 13 | 28/06/2004 | 83.5 | 733.8 | 3.6 |
| 15 | 14 | 28/06/2004 | 83.5 | 691 | 3.6 |
| 16 | 15 | 28/06/2004 | 83.7 | 653.8 | 3.6 |
| 17 | 16 | 28/06/2004 | 83.8 | 620.5 | 3.6 |
| 18 | 17 | 28/06/2004 | 84.3 | 591.9 | 3.6 |
| 19 | 18 | 28/06/2004 | 84.5 | 564.9 | 3.6 |
| 20 | 19 | 28/06/2004 | 84.6 | 539 | 3.6 |
| 21 | 20 | 28/06/2004 | 84.5 | 515.6 | 3.6 |
| 22 | 21 | 28/06/2004 | 84.2 | 494.8 | 3.6 |
| 23 | 22 | 28/06/2004 | 84 | 474.8 | 3.6 |
| 24 | 23 | 28/06/2004 | 83.8 | 455.2 | 3.6 |
| 25 | 24 | 28/06/2004 | 83.6 | 437.3 | 3.6 |
| 26 | 25 | 28/06/2004 | 83.4 | 421.2 | 3.6 |
| 27 | 26 | 28/06/2004 | 83.1 | 405.9 | 3.6 |
| 28 | 27 | 28/06/2004 | 82.7 | 392.4 | 3.6 |
| 29 | 28 | 28/06/2004 | 82.2 | 379.3 | 3.6 |
| 30 | 29 | 28/06/2004 | 81.5 | 367.3 | 3.6 |
| 31 | 30 | 28/06/2004 | 80.9 | 355.8 | 3.6 |
| 32 | 31 | 28/06/2004 | 80.3 | 345.1 | 3.6 |
| 33 | 32 | 28/06/2004 | 79.6 | 335.1 | 3.6 |

\6-28-04 TRAINING DAY /

Ready NUM

**Step 8:**
**Your administrator will know where the excel program is located that will be used to import the cvs file into a format that the EPA requires.**

**Step 9:**
**Open the excel file for import. Locate location for the file. Highlight and open the program**

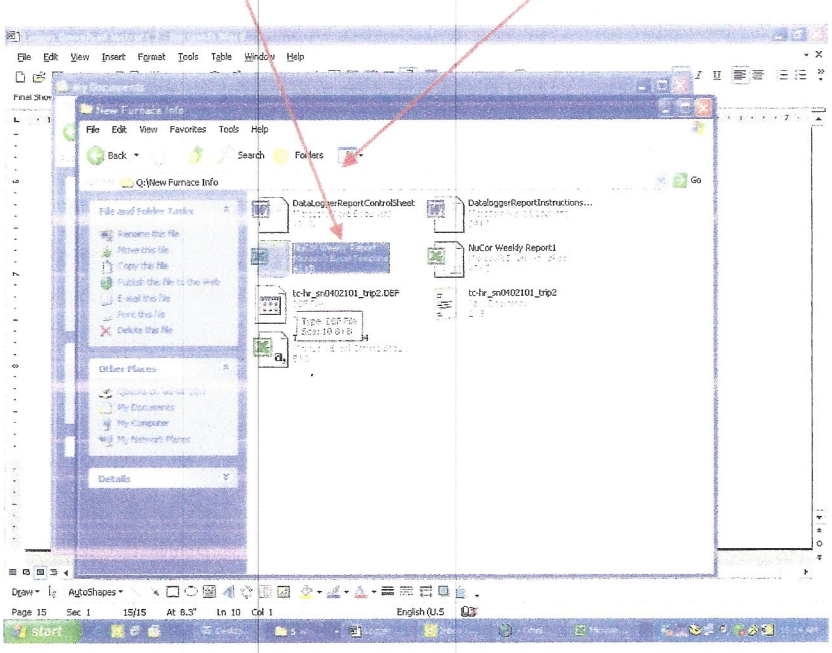


This is what will be brought up on the screen:

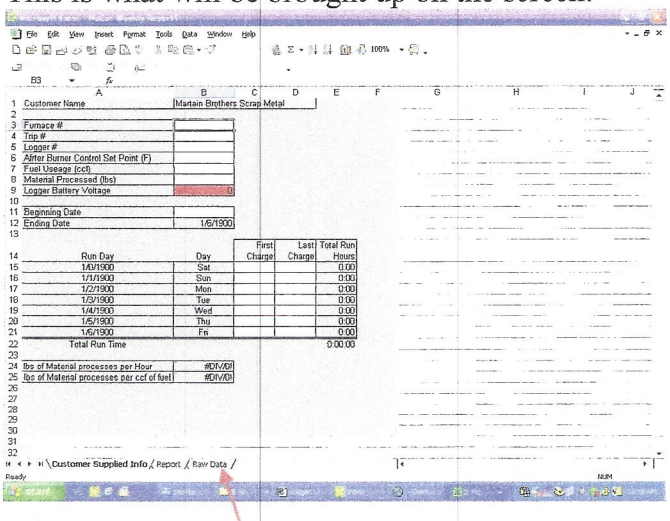


**Step 10:** Click in tab raw data

This screen will be displayed:

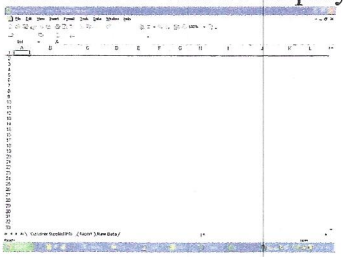

**Step 11:**
Go back to the screen that has the csv file (step 7). Click the mouse the top left hand corner to highlight (the screen should) turn purple). Press the "control key" and the "c" key simultaneously.

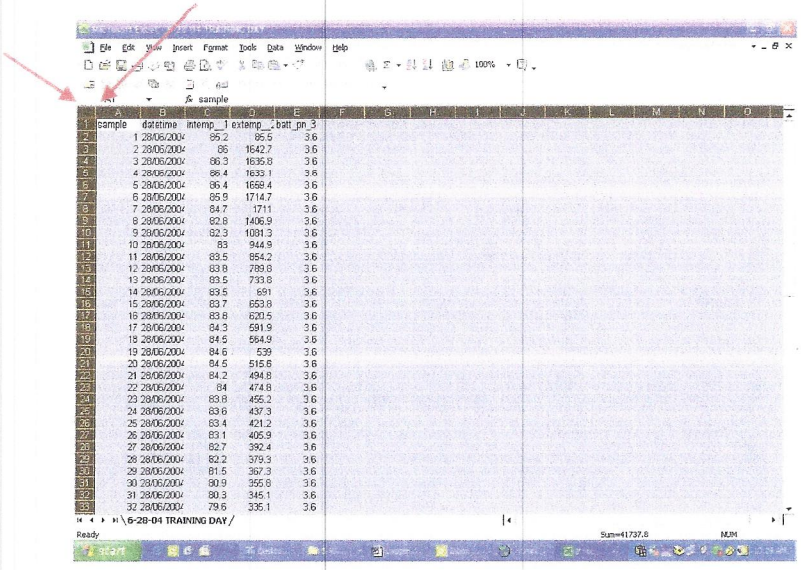


**Step 11:**
Bring the screen up that is in the excel file for the import (Step 10). Click the mouse in cell "A1".

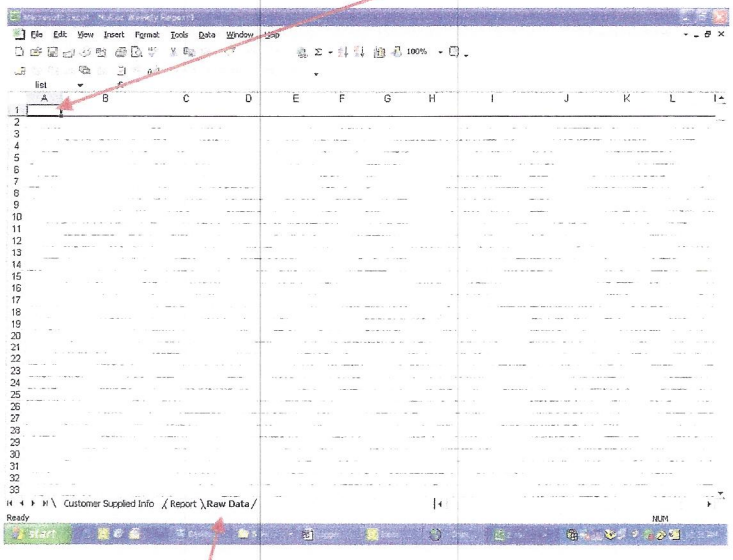

**Step 12:**

**Now press the "control" key and the "v" simultaneously to paste the information. Your screen will now look like the. Notice the sheets on the bottom. You are now working in the excel file.**

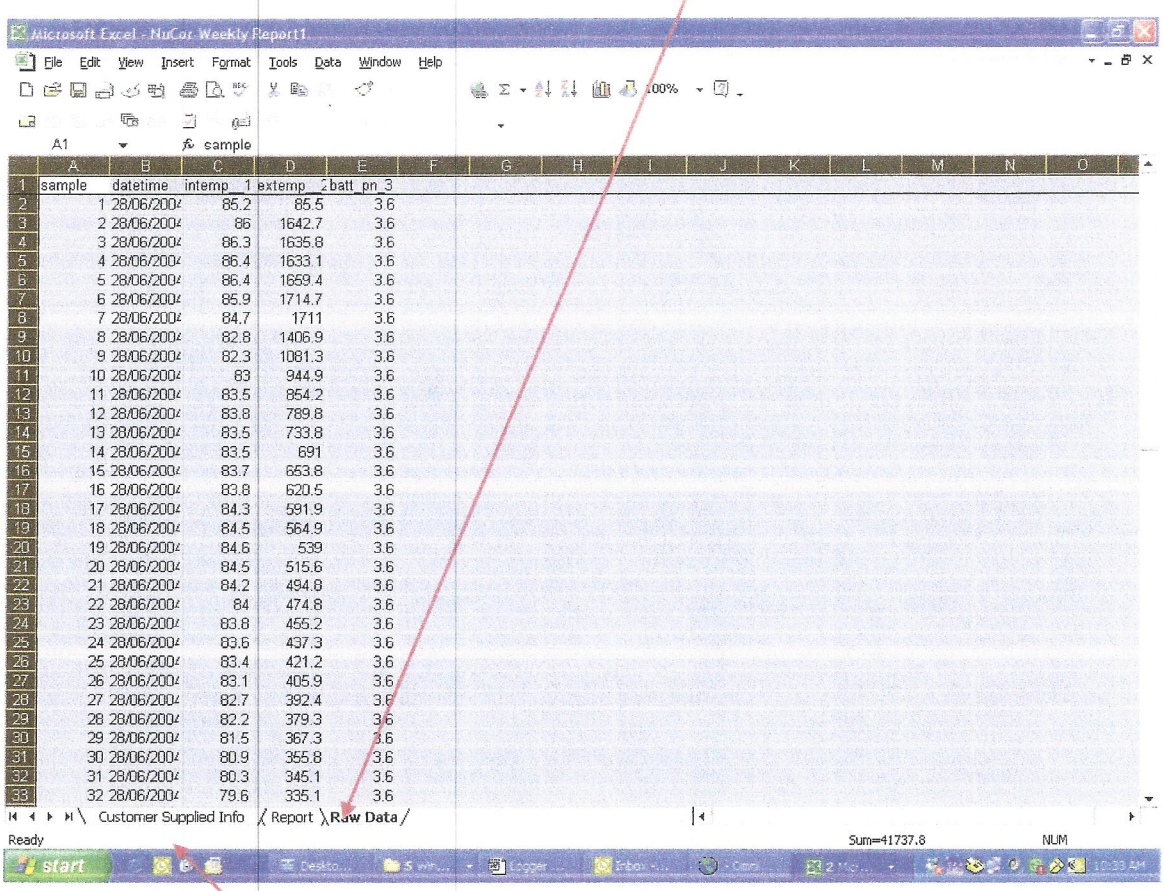


| sample | datetime | intemp_1 | extemp_2 | batt_pn_3 |
|---|---|---|---|---|
| 1 | 28/06/200 | 85.2 | 85.5 | 3.6 |
| 2 | 28/06/200 | 86 | 1642.7 | 3.6 |
| 3 | 28/06/200 | 86.3 | 1635.8 | 3.6 |
| 4 | 28/06/200 | 86.4 | 1633.1 | 3.6 |
| 5 | 28/06/200 | 86.4 | 1659.4 | 3.6 |
| 6 | 28/06/200 | 85.9 | 1714.7 | 3.6 |
| 7 | 28/06/200 | 84.7 | 1711 | 3.6 |
| 8 | 28/06/200 | 82.8 | 1406.9 | 3.6 |
| 9 | 28/06/200 | 82.3 | 1081.3 | 3.6 |
| 10 | 28/06/200 | 83 | 944.9 | 3.6 |
| 11 | 28/06/200 | 83.5 | 854.2 | 3.6 |
| 12 | 28/06/200 | 83.8 | 789.8 | 3.6 |
| 13 | 28/06/200 | 83.5 | 733.8 | 3.6 |
| 14 | 28/06/200 | 83.5 | 691 | 3.6 |
| 15 | 28/06/200 | 83.7 | 653.8 | 3.6 |
| 16 | 28/06/200 | 83.8 | 620.5 | 3.6 |
| 17 | 28/06/200 | 84.3 | 591.9 | 3.6 |
| 18 | 28/06/200 | 84.5 | 564.9 | 3.6 |
| 19 | 28/06/200 | 84.6 | 539 | 3.6 |
| 20 | 28/06/200 | 84.5 | 515.6 | 3.6 |
| 21 | 28/06/200 | 84.2 | 494.8 | 3.6 |
| 22 | 28/06/200 | 84 | 474.8 | 3.6 |
| 23 | 28/06/200 | 83.8 | 455.2 | 3.6 |
| 24 | 28/06/200 | 83.6 | 437.3 | 3.6 |
| 25 | 28/06/200 | 83.4 | 421.2 | 3.6 |
| 26 | 28/06/200 | 83.1 | 405.9 | 3.6 |
| 27 | 28/06/200 | 82.7 | 392.4 | 3.6 |
| 28 | 28/06/200 | 82.2 | 379.3 | 3.6 |
| 29 | 28/06/200 | 81.5 | 367.3 | 3.6 |
| 30 | 28/06/200 | 80.9 | 355.8 | 3.6 |
| 31 | 28/06/200 | 80.3 | 345.1 | 3.6 |
| 32 | 28/06/200 | 79.6 | 335.1 | 3.6 |

**Step 13:**

Now click on the "***Customer Supplied Info***" sheet:

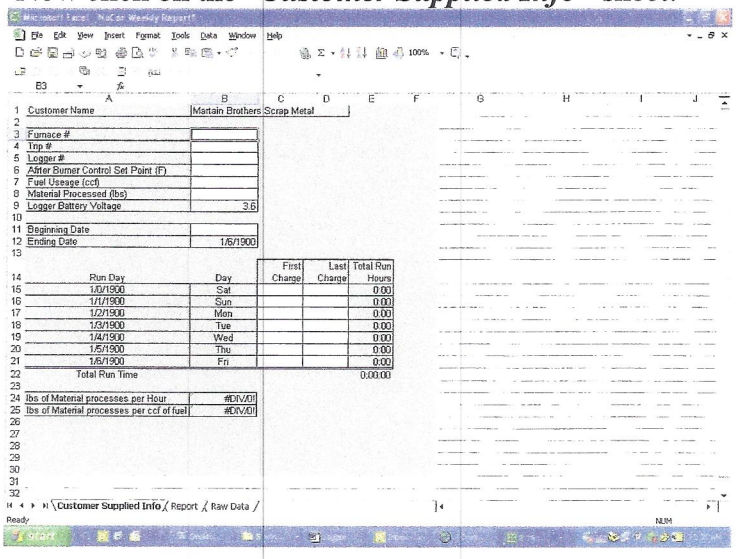

Do not type in the gray areas (these are calculation cells).

1) Calculate the fuel usage from the recorded data that the operators posted on the **"Daily operators logs"**. Place the total in the cell call "Fuel Usage"
2) Enter the total lbs of melted aluminum for the recorded period in the "**Material Processed"** cell.
3) Fill in the date the recording period began **"Beginning Date".**
4) Click the mouse on the "Ending Date cell and look at the red arrows below. The calculation will appear here: If you are recording a 5 day period change the 6 to 5 (and so on).

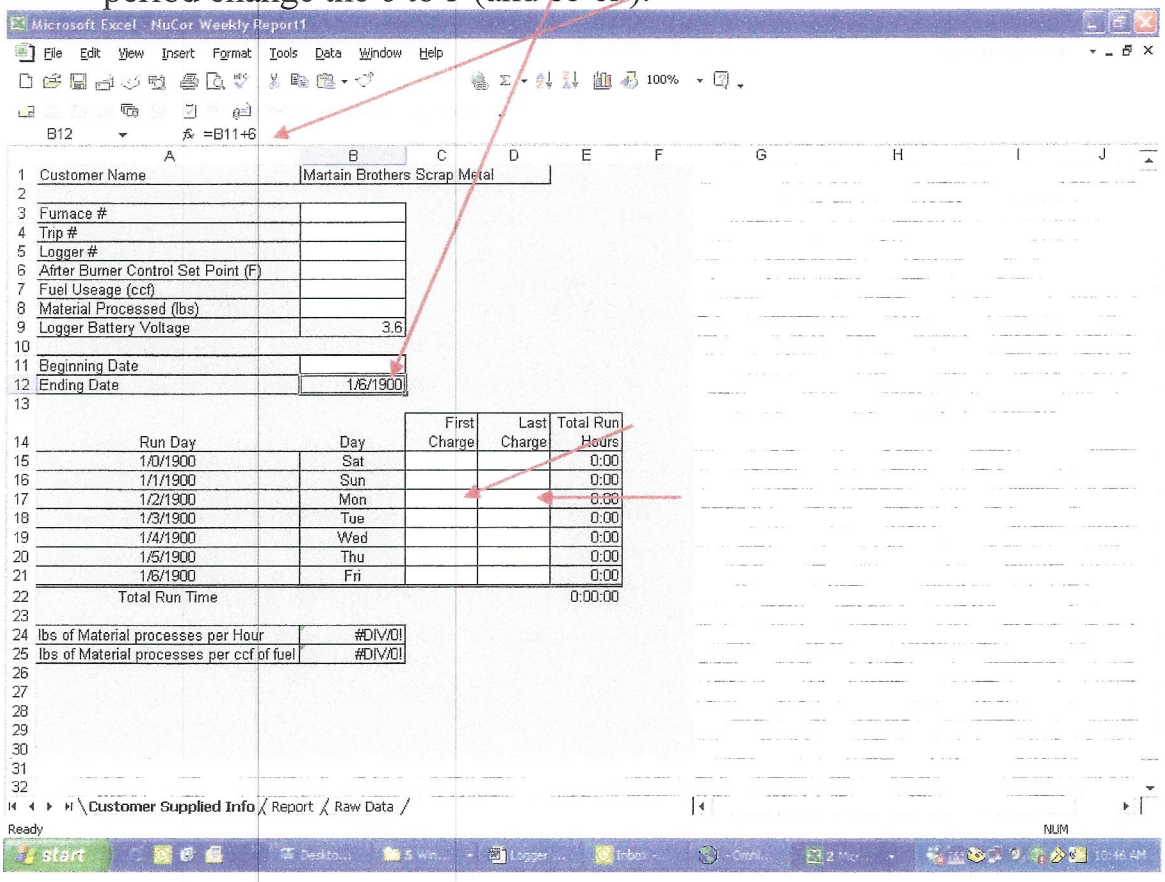


Fill in the start and stop times for the recorded day. Your administrator will let you know if you are on a 12 hour record or 24.
Print the ***"Customer Supplied Info"*** sheet, as well as the ***"Report"*** sheet.
**Save in a binder. Save the *"txt file, "csv"* file to a disc or server. Ask your administrator if the excel file should also be saved. If so, rename the excel file the same as the *"txt" and "csv"* (save as an excel file). This will enable you to continue to work on the original *"Weekly Report.***

# Weekly Report1

| | |
|---|---|
| Customer Name | Jeff's Autobody & Recycling |

| | |
|---|---|
| Furnace # | |
| Trip # | |
| Logger # | |
| Afrter Burner Control Set Point (F) | |
| Fuel Useage (ccf) | |
| Material Processed (lbs) | |
| Logger Battery Voltage | 0 |

| | |
|---|---|
| Beginning Date | |
| Ending Date | 1/6/1900 |

| Run Day | Day | First Charge | Last Charge | Total Run Hours |
|---|---|---|---|---|
| 1/0/1900 | Sat | | | 0:00 |
| 1/1/1900 | Sun | | | 0:00 |
| 1/2/1900 | Mon | | | 0:00 |
| 1/3/1900 | Tue | | | 0:00 |
| 1/4/1900 | Wed | | | 0:00 |
| 1/5/1900 | Thu | | | 0:00 |
| 1/6/1900 | Fri | | | 0:00 |
| Total Run Time | | | | 0:00:00 |

| | |
|---|---|
| lbs of Material processes per Hour | #DIV/0! |
| lbs of Material processes per ccf of fuel | #DIV/0! |

| Run Date | Day | Run Hours | 3 Hour Block # | Block Size | Start Date & Time | Block Average |
|---|---|---|---|---|---|---|
| | Sat | | | | | |
| 1/1/1900 | Sun | | | | | |
| 1/2/1900 | Mon | | | | | |
| 1/3/1900 | Tue | | | | | |
| 1/4/1900 | Wed | | | | | |
| 1/5/1900 | Thu | | | | | |
| 1/6/1900 | Fri | | | | | |

# Weekly Report1

# SECTION 12
# DAILY OPERATIONS LOG SHEET

US FURNACES, LLC MAX 4000

# Daily Operations Log Sheet

Date:

Operators:

Gas Reading:

| Time | Action/Type | A/B Temp | Time | Action/Type | A/B Temp |
|---|---|---|---|---|---|
| | | | | | |
| | | | | | |
| | | | | | |

# SECTION 13
# OPERATORS TRAINING CERTIFICATE

US FURNACES, INC MAX 4000

Recycling Services International, LLC
Qualified Reclaiming Furnace Specialists
Aluminum, Copper, Precious Metal, & Transformer Furnaces
Pollution Control Upgrades and Consultation
www.recyclingfurnaces.com

# FURNACE OPERATION TRAINING

**This certificate is to verify that the following employee:_____**

**working for the following company:_____, has**

**successfully completed the *Aluminum Sweat Furnace Operator* training session required for proper operation of the following equipment:**

***US Furnaces MAX-4000 Aluminum Sweat Furnace***

**TRAINER: Dave Conway**

**SIGNED:_____ DATE:_____**

20 Roosevelt Blvd.Cohoes, New York 12047
Phone: (518) 424-1168 FAX: 518-233-0006 E-mail: rsidave@aol.com